Serial Number: RFP-FQ16146/NAC
Date of Issue: July 11, 2017
Original Proposal Due Date: Feb. 3, 2017
Revised Proposal Due Date: November 13, 2017

WASHINGTON METROPOLITAN AREA TRANSIT AUTHORITY
600 FIFTH STREET, N.W.
WASHINGTON, DC 20001

July 11, 2017
AMENDMENT NO. 4
REQUEST FOR PROPOSALS
FOR
POTOMAC YARD METRORAIL STATION
FQ16146/NAC

TO WHOM IT MAY CONCERN:

The Request For Proposals and Proposal Documents accompanying RFP FQ16146/NAC requesting Proposals for the above project are hereby changed in part as listed below.

I. GENERAL INFORMATION

This amendment defines requirements for revised technical and price proposals on the referenced project.

II. CHANGES TO DOCUMENTS

The Request For Proposals and Proposal Documents accompanying solicitation RFP/FQ16146/NAC are hereby changed in part as follows:

1. VOLUME 1 – DIVISIONS 0 AND 1

Delete the following pages and in lieu thereof substitute the accompanying pages:

DELETE	SUBSTITUTE	DESCRIPTION
00 10 00 -1	00 10 00 -1	Revised
00 10 00 -2	00 10 00 -1	Revised
00 10 00 -4	00 10 00 -4	Revised
00 20 00	00 20 00	Revised – Full Section
00 30 00 -3	00 30 00 -2	Revised
00 43 40 -1	00 43 40 -1	Revised
00 43 40 -2	00 43 40 -2	Revised
00 43 40 -3	00 43 40 -2	Revised
00 80 00	00 80 00	Revised – Full Section
01 11 00 -2	01 11 00 -2	Revised
01 11 00 -3	01 11 00 -3	Revised
01 11 00 -6	01 11 00 -6	Revised

2. VOLUME 2 – DIVISIONS 2 THROUGH 49

Add the following sections:

ADD	DESCRIPTION
14 10 00	New Section
32 05 10	New Section

27 02 30	New Section
27 05 25	New Section
27 10 00	New Section
28 40 02	New Section
34 21 02	New Section
34 24 19.10	New Section
34 24 23	New Section
34 42 65	New Section

Proposers are advised that the Authority will consider either hydraulic or gearless traction passenger elevators for this project. Proposers shall provide pricing for both types, therefore Section 14 21 00 remains in Volume 2.

Delete the following pages and in lieu thereof substitute the accompanying pages:

DELETE	SUBSTITUTE	DESCRIPTION
34 11 11	34 11 11	Revised
34 11 12	34 11 12	Revised
34 11 33.16	34 11 33.16	Revised
34 11 35	34 11 35	Revised
34 11 36.13	34 11 36.13	Revised
34 24 21	34 24 21	Revised
34 24 22	34 24 22	Revised
34 42 04	None	Deleted
34 42 13	34 42 13	Revised
34 42 17	None	Deleted
34 42 18	34 42 18	Revised
34 42 21	34 42 21	Revised
34 42 22	None	Deleted
34 42 23	34 42 23	Revised
34 42 24	None	Deleted
34 42 25	None	Deleted
34 42 26	34 42 26	Revised
34 42 27	None	Deleted
34 42 32	None	Deleted
34 42 33	None	Deleted
34 42 34	None	Deleted
34 42 35	34 42 35	Revised
34 42 43	34 42 43	Revised
34 42 49	34 42 49	Revised
34 42 53	34 42 53	Revised
34 42 55	None	Deleted
34 42 56	None	Deleted
34 42 62	34 42 62	Revised
34 42 64	34 42 64	Revised
34 42 66	None	Deleted
34 42 68	34 42 68	Revised
34 42 69	34 42 69	Revised
34 42 73	34 42 73	Revised
34 42 76	None	Deleted
34 42 81	34 42 81	Revised
34 42 82	34 42 82	Revised
34 42 83	34 42 83	Revised
34 42 91	None	Deleted

3. VOLUME 3.1 – PROJECT DIRECTIVE DRAWINGS:

Narrative Changes: This amendment modifies elements of the facility design as described below. The proposers' base bid shall incorporate these changes in scope:

1. Eliminate the south station entrance and mezzanine, including the following:
    a. West Ramp;
    b. Glebe Road Entrance Pavilion;
    c. South Pedestrian/Bicycle Bridge;
    d. South Mezzanine, including associated fare gates and vertical circulation elements; and
    e. East Ramp, including bike storage
2. Eliminate park improvements other than restoration in kind.
3. Redesign the south end of the station to incorporate (1) and (2) above, including but not necessarily limited to:
    a. Means of egress to comply with NFPA 130 and other applicable codes
    b. Building exterior enclosure
4. Add a public entrance to the north mezzanine to accommodate pedestrian access from grade at the east side of the station. Provide a walkway to the new Entrance from Potomac Greens Park, including lighting and perimeter fencing.

Add the following Drawing(s):

DRAWING NUMBER	DRAWING TITLE	DESCRIPTION
C10-G-008A	Installation Plan Track Equipment Route C 405+00 to 418+00	New
C10-G-24	ATP Speed Commands Control Line Diagram Route C Normal Direction 369+17 to 437+82	New
C10-G-26	ATP Speed Commands Control Line Diagram Route C Reverse Direction 369+17 to 437+82	New
C10-G-017	Installation Sketch Train Control Room Space Requirements – National Airport	New
C11-CTVR-001	Signal and Trackwork Pre-Construction (Existing)	New
C11-CTVR-002	Signal and Trackwork Construction Complete Pre-Cutover	New
C11-CTVR-003	Signal and Trackwork Track 1 Cut-Over	New
C11-CTVR-004	Signal and Trackwork Track 2 Cut-Over	New
C11-G-(RC)	Route Chart	New
C11-G-007A	Installation Plan Track Equipment Route C 465+32.30 to 489+00	New
C11-G-008A	Installation Plan Track Equipment Route C 439+00 to 465+32.30	New
C11-G-009A	Installation Plan Track Equipment Route C 418+00 to 439+00	New
C11-G-CL1	ATP Speed Commands Control Line Diagram Route C Normal Direction 396+96 to 516+13	New
C11-G-CL2	ATP Speed Commands Control Line Diagram Route C Reverse Direction 396+96 to 516+13	New
C12-G-010	Installation Sketch Train Control Room Space Requirements – Braddock Road	New
C12-G-CL1	ATP Speed Commands Control Line Diagram Route C Normal Direction 463+68 to 563+76	New
C12-G-CL2	ATP Speed Commands Control Line Diagram Route C Reverse Direction 463+68 to 566+86	New
C11-CBLN-001	Train Control Cable Plan Track C1 & C2 Outbound 448+26 to 484+56	New
C11-CBLN-002	Train Control Cable Plan Track C1 Inbound	New

	424+80 to 448+26	
C11-CBLN-003	Train Control Cable Plan Track C2 Inbound 424+80 to 446+85	New

4. VOLUME 3.2 – WMATA ST AND DD DRAWINGS:

Delete the following Drawing(s) and in lieu thereof substitute the accompanying pages:

DELETE	SUBSTITUTE	DRAWING TITLE	DESCRIPTION
ST-TC-G-021	ST-ATC-GEN-001	Typical Track Plan Abbreviations, Symbols and Installation Data	Renumbered
ST-TC-G-022	ST-ATC-GEN-002	Typical Electrical Symbols	Renumbered
ST-TC-G-025	ST-ATC-GEN-003	Typical Relay/Contact Location Chart Format	Renumbered
ST-TC-G-031	ST-ATC-GEN-005	Typical ATC Wayside Cable Plan	Renumbered
ST-TC-G-041	ST-ATC-GEN-012	Typical Large Junction Box Plan	Revised
ST-TC-G-042	ST-ATC-GEN-013	Typical Small Junction Box Plan	Revised
ST-TC-G-045	None	Typical Start ATC – End ATC Sign Layouts	Deleted
ST-TC-G-049	ST-ATC-GEN-017	Typical Foundations for Signal, Sign and Pushbutton Layouts	Renumbered
ST-TC-C-001	ST-ATC-CKT-000	Cover Page – Typical Circuits – General	Renumbered
ST-TC-C-024	ST-ATC-CKT-014	Typical Repeater Relay Wiring and Nomenclature	Renumbered
ST-TC-C-036	ST-ATC-CKT-015	Typical Outbound Train Approach Warning Circuits/Logic	Renumbered
ST-TC-I-000	ST-ATC-IC-000	Cover Page – Typical Interlocking Circuits	Renumbered
ST-TC-I-001	ST-ATC-IC-001	Typical Pushbutton and Fleeting Circuits Signals 2, 4, 6 & 8	Renumbered
ST-TC-I-002	ST-ATC-IC-002	Typical Turnback Pushbutton and Fleeting Circuits Signals 10, 14, 20 & 24	Renumbered
ST-TC-I-007	None	Typical Wayside Pushbutton Storage Circuits – Signal 2	Deleted
ST-TC-I-008	None	Typical Wayside Pushbutton Storage Circuits – Signal 4	Deleted
ST-TC-I-009	None	Typical Wayside Pushbutton Storage Circuits – Signal 6	Deleted
ST-TC-I-010	None	Typical Wayside Pushbutton Storage Circuits – Signal 8	Deleted
ST-TC-I-011	None	Typical Timer Cancel Circuits for Signals having Wayside Pushbutton Control	Deleted
ST-TC-I-013	ST-ATC-IC-008	Typical Route Storage Circuits	Renumbered
ST-TC-I-016	ST-ATC-IC-009	Typical Route Storage Circuits (Sheet 1 of 2)	Renumbered
ST-TC-I-017	ST-ATC-IC-010	Typical Route Storage Circuits (Sheet 2 of 2)	Renumbered
ST-TC-I-021	ST-ATC-IC-011	Typical Route Initiation Circuits (Emergency Cross-Over)	Renumbered
ST-TC-I-023	ST-ATC-IC-012	Typical Route Initiation Circuits (Terminal Cross-Over)	Renumbered
ST-TC-I-024	ST-ATC-IC-013	Typical Route Initiation & Reset Stick Cancel Circuits	Renumbered
ST-TC-I-025	ST-ATC-IC-014	Typical Route Initiation & Reset Stick Cancel Circuits	Renumbered
ST-TC-I-027	None	Typical Automatic Route Initiation Stick Circuits – Signals 2, 6 & 8	Deleted
ST-TC-I-029	ST-ATC-IC-016	Typical Route Completion Circuits	Renumbered

ST-TC-I-031	ST-ATC-IC-017	Typical Route Check Circuits	Renumbered
ST-TC-I-035	ST-ATC-IC-018	Typical Approach Stick Circuits	Renumbered
ST-TC-I-036	ST-ATC-IC-019	Typical Route Stick & Approach Circuits	Renumbered
ST-TC-I-037	None	Typical Route Stick & Approach Circuits	Deleted
ST-TC-I-039	None	Typical Automatic Signal Operation Selection Circuits – Signals 2, 6 & 8	Deleted
ST-TC-I-041	ST-ATC-IC-022	Typical Switch Control & Correspondence Circuits – 1 Switch (Cross-Over)	Renumbered
ST-TC-I-042	ST-ATC-IC-023	Typical Switch Control & Correspondence Circuits – 3 Switch (Cross-Over)	Renumbered
ST-TC-I-043	ST-ATC-IC-024	Typical Switch Operating & Repeater Circuits	Revised
ST-TC-I-045	ST-ATC-IC-025	Typical Repeater Circuits	Renumbered
ST-TC-I-061	ST-ATC-IC-031	Typical Signal Control Circuits (Cross-Over Interlockings)	Renumbered
ST-TC-I-062	ST-ATC-IC-032	Typical Signal Repeater Circuits (Emergency Cross-Over)	Renumbered
ST-TC-I-064	ST-ATC-IC-033	Typical Signal Repeater Circuits (Terminal Cross-Over)	Renumbered
ST-TC-I-066	ST-ATC-IC-035	Typical Signal Lighting Circuits	Revised
ST-TC-I-067	None	Typical Marker Signal Lighting Circuits	Deleted
ST-TC-I-069	None	Typical Detector Track Repeater Circuits	Deleted
ST-TC-I-079	ST-ATC-IC-043	Typical Local, Remote, Panel & Flashing B28G Energy Distribution	Renumbered
ST-TC-I-081	ST-ATC-IC-044	Typical Auxiliary Switch Pushbutton and Switch Position Indication Circuits	Renumbered
ST-TC-I-082	ST-ATC-IC-045	Typical Auxiliary Switch Pushbutton and Switch Position Indication Circuits (Switch 3)	Renumbered
ST-TC-I-085	ST-ATC-IC-046	Typical Interlocking Control Panel Indication Circuits, Track Occupancy and Traffic	Renumbered
ST-TC-I-086	ST-ATC-IC-047	Typical Interlocking Control Panel Indication Circuits, Signal Fleeting and Route	Renumbered
ST-TC-I-100	ST-ATC-IEQ-000	Cover Page – Typical Equipment Layouts	Renumbered
ST-TC-I-101	None	Typical Interlocking Configuration	Deleted
ST-TC-I-107	ST-ATC-IEQ-008	Typical AC Track Circuit Connections	Renumbered
ST-TC-I-108	None	Typical Mainline Signal Rail Bonding	Deleted
ST-TC-I-109	None	Typical Mainline Negative Return Bonding (Systemwide)	Deleted
ST-TC-I-111	ST-ATC-IEQ-013	Typical Switch-and-Lock Movement Layout on Ballasted Track	Renumbered
ST-TC-I-112	None	Typical Switch-and-Lock Movement Layout – Direct Fixation	Deleted
ST-TC-I-114	ST-ATC-IEQ-015	Typical Snowmelter Layout	Revised
ST-TC-I-115	ST-ATC-IEQ-016	Typical Snowmelter Control Case	Renumbered
ST-TC-I-116	ST-ATC-IEQ-017	Typical Snowmelter Heating Element Mounting Details	Revised
ST-TC-I-117	ST-ATC-IEQ-018	Typical Switch Rod Heater Layout on Ballast	Revised
ST-TC-I-121	ST-ATC-IEQ-019	Typical Signal Layouts	Renumbered
ST-TC-I-123	None	Typical Wayside Pushbutton Layout	Deleted
ST-TC-I-131	ST-ATC-IEQ-021	Interlocking Vital Processor System	Revised

		Functional Block Diagram	
ST-TC-P-000	ST-ATC-PWR-000	Cover Page – Typical Power Drawings	Renumbered
ST-TC-P-001	ST-ATC-PWR-001	Typical Power Distribution Schematic for TCRS	Renumbered
ST-TC-P-002	ST-ATC-PWR-002	Typical DC Power Distribution	Renumbered
ST-TC-P-003	ST-ATC-PWR-003	Typical Uninterruptible AC Power Distribution	Renumbered
ST-TC-P-004	None	Typical Power Failure and Blown Fuse Circuits	Deleted
ST-TC-P-005	ST-ATC-PWR-005	Typical Power Failure & Blown Fuse Circuits (Stations with Interlocking)	Renumbered
ST-TC-P-006	ST-ATC-PWR-006	Typical Ground Detector Circuits	Renumbered
ST-TC-P-007	ST-ATC-PWR-007	Typical Snowmelter Control & Indication Circuits	Renumbered
ST-TC-P-008	ST-ATC-IC-048	Typical Snowmelter Control Case Circuits	Renumbered
ST-TC-A5-G-001	ST-ATC-CKT-016	Cover Sheet (WMATA Cleveland Park A05 Example Location)	Renumbered
ST-TC-A5-C-001	None	Platform Track Repeater Circuits (Example)	Deleted
ST-TC-A5-C-007	None	Traffic Initiation & Control Line Circuits – Tracks 1 & 2 (Example)	Deleted
ST-TC-A5-C-009	None	Line Repeater Circuits	Deleted
ST-TC-INF-000	ST-ATC-GEN-000	Cover Page – Information Drawings	Renumbered
ST-TC-CE-030	ST-ATC-GEN-026	ATC Clearance Envelope	Renumbered
ST-TC-HDO-031	ST-ATC-GEN-027	Horizontal Limits of Dynamic Outline of Design Vehicle Through Turnouts	Renumbered
ST-TC-019	None	Switch and Lock Movement Direct Fixation for Numbers 8, 10 and 15 Turnouts	Deleted
ST-TC-040	DD-ATC-CND-003	Switch Machine Clearance & Tunnel Conduit Requirements	Revised
ST-TC-041	DD-ATC-CND-004	Train Control Conduits-At Grade	Revised
ST-TC-042	DD-ATC-CND-005	Conduit Requirements for Turnouts at Grade	Revised
DD-TW-CR-002	ST-TW-CR-002	Composite Rail Assembly – Ballasted Track	Revised
DD-TW-CR-003	ST-TW-CR-003	Composite Rail Clearance Envelop and Splice Joint Assembly	Revised
DD-TW-CR-004	ST-TW-CR-004	Composite Rail End Approaches	Revised
DD-TW-CR-005	ST-TW-CR-005	Composite Rail Expansion Joint Assembly and Details	Revised
DD-TW-CR-006	ST-TW-CR-006	Contact Rail Fiberglass Insulator	Revised
DD-TW-CR-007	ST-TW-CR-007	Porcelain Insulator Assembly and Details Sheet 1 of 2	Renumbered
DD-TW-CR-008	ST-TW-CR-008	Porcelain Insulator Assembly and Details Sheet 2 of 2	Renumbered
DD-TW-CR-009	ST-TW-CR-009	Anchor Assembly Details and Sections Sheet 1 of 2	Revised
DD-TW-CR-010	ST-TW-CR-010	Anchor Assembly Details and Sections Sheet 2 of 2	Revised
DD-TW-CR-	ST-TW-CR-011	Spacing – Expansion Joint, Anchors and	Revised

011		Insulators	
DD-TW-CR-012	ST-TW-CR-012	Expansion Joint Jumper Cable Support Details in Ballasted Track	Revised
DD-TW-CR-013	ST-TW-CR-013	Composite Rail with Type A Protection Cover	Renumbered
DD-TW-CR-014	ST-TW-CR-014	Type A Protection Cover Assembly Details and Sections	Renumbered
DD-TW-CR-015	ST-TW-CR-015	Composite Rail with Type B Protection Board	Renumbered
DD-TW-CR-016	ST-TW-CR-016	Type B Protection Cover Assembly Details and Sections	Renumbered
DD-TW-CR-017	ST-TW-CR-017	Composite Rail Typical Conduit and Cable Arrangement	Revised
DD-TW-CR-022	ST-TW-CR-022	Contact Rail Arrangement No. 10 Double Crossover 14'-0", 36'-10" and 40'-6" Track Centers	Revised

Add the following Drawing(s):

DRAWING NUMBER	DRAWING TITLE	DESCRIPTION
ST-ATC-IDX-000	Cover Page – ATC Standard Drawings	New
ST-ATC-IDX-001	Index of Drawings (Sheet 1 of 4)	New
ST-ATC-IDX-002	Index of Drawings (Sheet 2 of 4)	New
ST-ATC-IDX-003	Index of Drawings (Sheet 3 of 4)	New
ST-ATC-IDX-004	Index of Drawings (Sheet 4 of 4)	New
ST-ATC-GEN-004	Data Sheet Format – Safe Braking Tests	New
ST-ATC-GEN-006	Typical Impedance Bond layout for Direct Fixation to Concrete	New
ST-ATC-GEN-008	Typical Impedance Bond "T" Connector and Two Hole Tube Crimp Lug Connection to Rail	New
ST-ATC-GEN-009	Typical High Current Impedance Bond Negative Return Bonding Diagram	New
ST-ATC-GEN-010	Typical Interlocking Wrap Bonding	New
ST-ATC-GEN-011	Typical Marker Coil Layouts – Direct Fixation and Ballasted Track	New
ST-ATCGEN-015	Typical Station Stop and Turnback Sign Layouts	New
ST-ATC-GEN-016	Typical Berthing Marker Layouts	New
ST-ATC-GEN-018	Typical Platform Edgelight and Program Stop Train Placement Diagram	New
ST-ATC-GEN-020	Typical ATP Track Module Block Diagram	New
ST-ATC-GEN-022	Typical TWC Transmitter Block Diagram	New
ST-ATC-GEN-023	Typical TWC Receiver Block Diagram	New
ST-ATC-CKT-001	Typical Platform Edgelight Control Circuit (Sheet 1 of 2)	New
ST-ATC-CKT-002	Typical Platform Edgelight Control Circuit (Sheet 2 of 2)	New
ST-ATC-CKT-003	Typical Program Stop Control Circuits	New
ST-ATC-CKT-004	Typical Program Stop Marker Control Circuits	New
ST-ATC-CKT-005	Typical Door and Dwell Control Circuits	New
ST-ATC-CKT-009	Typical TWC FLYBY Transmitter Circuits	New
ST-ATC-CKT-010	Typical TWC XMTR – RCVR Interface Circuits	New
ST-ATC-CKT-011	Typical TWC Selection Circuits	New
ST-ATC-CKT-013	Typical Temporary Speed Restriction Alarm Circuits	New
ST-ATC-CKT-024	Speed Limit Command Circuit A1-161-163 QR	New
ST-ATC-IC-026	Typical Speed Command Loop Control Stick Circuits (Audio Frequency)	New
ST-ATC-IC-027	Typical Speed Command Loop Control Stick Circuits	New

	(Power Frequency)	
ST-ATC-IC-029	Typical Speed Command Loop Circuits, Long Wire Loops (Power Frequency)	New
ST-ATC-IC-034	Typical Vital AC Track Relay Circuit Configurations	New
ST-ATC-IC-038	Typical Detector Track Repeater Circuits (Power Frequency)	New
ST-ATC-IEQ-003	Typical Interlocking Configuration (Power Frequency)	New
ST-ATC-IEQ-007	Typical Speed Command Crossover Loop Layout (Power Frequency)	New
ST-ATC-IEQ-010	Typical Mainline Signal Rail Bonding (Power Frequency Track Circuits)	New
ST-ATC-IEQ-012	Typical Mainline Negative Return Bonding (Power Frequency Track Circuits)	New
DD-ATC-CND-000	Cover Page – Design Drawings	New

5. VOLUME 4 – REPORTS

Add the following report:

FTA-FQ15192-MCAP-001 Potomac Yard Metrorail Station Cut-Over Strategy, prepared by Mott MacDonald, dated May 30, 2017

6. VOLUME 5 – PROJECT REQUIREMENTS

Delete the following pages within the WMATA Design Criteria_R9R3 and in lieu thereof substitute the accompanying pages of WMATA Design Criteria_R9R3-Signatures:

DELETE	SUBSTITUTE	TITLE	DESCRIPTION
Page 2	Page 1	Preface	Revised
Page 3	Page 2	Recommended for Deputy Chief Engineer Approval	Revised
Pages 4 of 15	Pages 3 of 13	Summary of Changes	Revised

Add the following document:

ADD	TITLE	DESCRIPTION
Vol 5.2	LAN WAN Design Criteria	New

7. Vol 10.1 - CITY OF ALEXANDRIA PROJECT REQUIREMENTS AND PROCESS GUIDE

Delete the following pages:
City of Alexandria Process Guide, pages 1 through 8

and in lieu thereof substitute the accompanying pages:
City of Alexandria Process Guide, pages 1 through 10

8. TRACTION POWER UPGRADES

Proposers are advised that the traction power information will be issued in Amendment 5 no later than July 31, 2017

9. CONTRACTOR QUESTIONS

This amendment does not include responses to Contractor Questions. Previous Authority responses provided in amendments 1, 2, or 3 still apply except as specifically noted herein. Proposers are advised that any other previous questions should be resubmitted if Authority response is still needed. Proposers are advised that the traction power information will be issued in Amendment 5 no later than July 31, 2017

10. ACKNOWLEDGEMENT

Offerors are required to acknowledge receipt of this amendment on the Technical and Price Proposal Forms (Pages 00 41 20-1 and 00 41 30-1) in the space provided. Failure to acknowledge all amendments may cause the bid to be considered not responsive to the invitation, which would require rejection of the Proposal.

_____

Norie A. Calvert
Contracting Officer

Enclosures

* * * * *

SECTION 00 10 00

PROPOSING REQUIREMENTS – DESIGN BUILD

00 10 10 REQUEST FOR PROPOSAL:

This Section includes Project information for Proposers.

NOTICE TO OFFERORS

Contract No. FQ16146/NAC includes RFP Documents for:

Project Name: POTOMAC YARD METRORAIL STATION

TECHNICAL PROPOSAL for the Work described herein shall be submitted to the Contract Administrator, Nichel Crooks, through WMATA's PMSS. Technical and Price Proposals shall be separate proposals and
submitted before 3:00 PM (local time) on November 13, 2017. All questions are to be directed to Contract # administrator.

DIRECTIONS TO SUBMITTING PROPOSER: Read and comply with the Solicitation Instructions. In addition to other submission requirements set forth in this Request for Proposal and all Amendments, the following must be properly executed, completed, and submitted separately as part of the offer:

A. TECHNICAL PROPOSAL:

1. Technical Proposal Form (properly executed)[1]
2. Technical Proposal

B. PRICE PROPOSAL:

1. Price Proposal Form (properly executed[1])
2. Price Schedule
3. Price Guarantee
4. Proposal Data Form with Supporting Data
5. Representations and Certifications
6. List of DBE Certified Firms[2]
7. DBE Data[3]

PROPOSAL(S) MUST SET FORTH FULL, ACCURATE, AND COMPLETE INFORMATION AS REQUIRED BY THIS REQUEST FOR PROPOSAL, INCLUDING ALL AMENDMENTS

[1] The separate sealed Technical and Price Proposal Forms must be marked with offer under Solicitation RFP No. FQ16146/NAC and with acknowledgement of all Amendments.
[[2] Proposed DBE firms must be certified WMATA DBE firms ***prior to submittal*** of Schedule of DBE Participation and Letters of Intent in order to be applied toward the DBE goal established for the Contract. Non-WMATA Certified DBE firms may be utilized by the Proposer but will not be applied toward the goal calculations.]
[3] DBE Data and List of WMATA DBE-Certified Firms must be updated and included in Best and Final Offer (BAFO) submission(s).

00 10 11 GENERAL STATEMENT OF WORK:

A. This solicitation is for the submittal of separate Technical and Price Proposals through a "Best Value" method of procurement for a Design-Build Project that includes furnishing both design and construction services. The Design-Builder, through itself or others, shall provide professional design engineering and architectural services as well as technical, sub-professional, clerical, and other services necessary for the complete design and preparation of the Design Drawings and Design Specifications, as well as the schedules, cost estimates, cost accounting, quality assurance/control and other Contract requirements. The Design-Builder shall also furnish all labor, equipment, materials, quality assurance/quality control, construction and environmental/security/safety superintendence, and field engineering services required for the construction of the Project. The Design-Builder is responsible for managing program and project coordination with Jurisdictional Authorities and Utilities through the Contracting Officer Representative; obtaining all necessary permits, approvals, and easements; performing architectural and engineering services; providing Submittals, field engineering support, quality management system to ensure that all work conforms to specified requirements; and providing operation and maintenance training and manuals for the systems and equipment installed. No attempt has been made to separate the Work by trades or types of construction, and the Design-Builder shall make its own decision as to the types of services needed to accomplish the Work.

B. It is the responsibility of the Design-Builder to gather all data necessary for the performance of the Work under this Contract that are needed in addition to Authority-furnished RFP Documents and to develop a complete and final design.

C. All work under this Contract shall be performed in a logical sequence as developed by the Design-Builder. The Work is divided in two phases, the Design Phase and the Construction Phase, however, there is an overlap between the Phases. The construction for any design elements will not be approved until the balance of the design is advanced to a stage where in the judgment of the Authority the design element can be adequately evaluated. The Design-Builder will receive approval by the Authority of the design by element before proceeding to construction for that element.

00 10 12 GENERAL SCOPE OF WORK:

A. POTOMAC YARD METRORAIL STATION:

1. Design and Construct the Potomac Yard Metrorail Station, on City of Alexandria, and WMATA property, located in City of Alexandria, Virginia.

   In addition to the Station, the project includes a separate building to contain the AC Room functions of the station. The AC Room building shall be sized and equipped to fully accommodate the AC Room functions of a WMATA Metrorail Station. New Track, as well as its associated Traction Power, Train Control, and amber light system, shall be constructed to accommodate the new Station location. Re-alignment of existing track shall be required to make the final connections to the new track. The Design Builder will be responsible for all furnishings, including, but not limited to, Furniture, Appliances, Kiosk, signage, pedestrian access, and entry pavilions.

2. Pedestrian bridges shall provide pedestrian and bicycle access over the CSX railroad corridor, and connect to the entry pavilions.

3. CSX Coordination, Reviews, Approvals, and Implementation:

WMATA and the City of Alexandria (the City) have had preliminary coordination discussions with CSX during the project development phase of the Potomac Yard Metrorail Station project. This section is to identify the coordination and implementation roles and responsibilities of WMATA, the City, and the Design Builder with CSX during the entirety of the project.

A. Potomac Yard Metro Station Final Environmental Impact Statement (FEIS),

B. Record of Decisions (RODs) from the Federal Transit Administration (FTA) and the National Park Service (NPS),

C. Section 106 Memorandum of Agreement (MOA),

D. Phase II Environmental Site Assessment

E. The City of Alexandria's Development Special Use Permit (DSUP2016-004, 2016-005, 2016-005) conditions

The above stated documents are provided in this Solicitation FQ16146/NAC. All cost associated with the required compliance shall be included in the Design Builders proposal. See SECTION 00 30 00 INFORMATION AVAILABLE TO PROPOSERS.

B. Basis of Design: As specified in Section 01 11 20, DESIGN AND PROGRAM REQUIREMENTS.

00 10 13 PROJECT SOLICITATION SCHEDULE:

A. The solicitation schedule for this Project is as follows:

1. Issue Revised Request for Proposal: July 11, 2017
2. One-on-One Meeting No. 1: September 11, 2017
3. Site Visits: by Appointment September-October 2017
4. One-on-One Meeting No. 2: October 23, 2017
5. Technical and Price Proposal: November 13, 2017
6. Request for Best and Final Offer: January 15, 2018
7. Receipt of Best and Final Offer: February 5, 2018
8. Projected Contract Award: May 1, 2018
9. Notice to Proceed: May 15, 2018

END OF SECTION

SECTION 00 20 00

INSTRUCTIONS TO PROPOSERS (RFP)

This Section includes procedures with which Proposers must comply and conditions affecting award of the Contract.

00 20 01 GENERAL INSTRUCTIONS

A. Definitions as used herein:

1. The term "Solicitation" used in this document means this Request for Proposals (RFP).

2. The term "Offer" and "Proposal" are synonymous and mean a response to this Solicitation.

3. The term “PMSS” used in this document refers to the Authority’s project management software system.

4. For further explanation of Contract terms, refer to Section 00 70 01, DEFINITIONS, of the General Conditions.

B. Method of Procurement:

1. This is a Best Value, single-phase, negotiated procurement.

a. Requires the Proposer(s) to prepare and submit separately Technical and Price Proposals based on the scope of Work set forth in the Solicitation. See Section 01 11 10, SUMMARY OF WORK. The Technical and Price Proposals will be evaluated separately based on the Technical Evaluation Factors stated under Section 00 20 03, TECHNICAL AND PRICE PROPOSAL FORMAT, PROCEDURES AND EVALUATION FACTORS, AND INSTRUCTIONS, and the Price Evaluation Factors stated in the same section.

b. DELETED

2. Oral presentation and Best and Final Offers are required. The Authority will not award this contract without a Best and Final Offer (BAFO).

C. Basis for Award:

1. Award will be made to that Proposer:

a. whose offer is judged by an integrated assessment of the evaluation criteria to be the most advantageous to the Authority based on technical merit and price as identified in Section 00 20 03, TECHNICAL AND PRICE PROPOSAL FORMAT, PROCEDURES AND EVALUATION FACTORS, AND INSTRUCTIONS, and

b. that the Authority deems responsible in accordance with the WMATA Procurement Procedures Manual.

2. The Authority reserves the right to conduct discussions with the Proposers. If it is determined that discussions are necessary, the Authority will establish a competitive range of all of the most highly rated technical Proposals.

3. The Authority will make a single award to one Proposer as the result of this Solicitation. See Notes to Proposers in Section 00 43 40, PRICE PROPOSAL SCHEDULE, for further award information.

4. A written award of acceptance of Proposal mailed or otherwise furnished by the Authority to the successful Proposer within the specified Acceptance Period shall result in a binding contract without further action by either party. The Authority may accept a Proposal whether or not it conducts discussions, unless the Authority receives from the Proposer a written notice of withdrawal before award.

D. Type of Contract: The Authority contemplates award of a fixed price contract.

E. Invitation Documents:

1. Invitation Documents are available on the Authority's PMSS and will be made available to the Proposer upon receipt of an e-mail sent to the Contract Administrator with the Proposer contact name, e-mail address, company name, and company physical address.

F. Preparation of Proposals:

1. The Proposer shall complete the Proposal Forms furnished in Section 00 40 00, PROPOSAL FORMS AND SUPPLEMENTS, or copies thereof, and submit them according to the instructions given in this RFP. If erasures or other changes appear on the forms, they must be initialed by the person signing the Proposal.

2. Each Proposer shall furnish the information required by the Solicitation. Proposers are expected to examine the RFP Documents. Failure to do so will be at the Proposer's risk.

G. Explanation to Proposers:

1. All explanations desired by a Proposer regarding the meaning or the interpretation of this RFP or all other Solicitation documents must be requested in writing 14 Days prior to the date set for receipt of Proposals to allow sufficient time for a reply to reach all Proposers before the submittal of their Proposals. These requests shall be forwarded to the Contract Administrator at NCrooks@WMATA.com. Oral explanations or instructions given before the award of the Contract will not be binding. Any information given to a prospective Proposer concerning the Solicitation will be furnished promptly to all prospective Proposers as an Amendment to this RFP, if the information is necessary in submitting Offers or if lack of such information would be prejudicial to other prospective Proposers.

2. The Authority reserves the right to amend the RFP prior to the date set for receipt of Proposals or Best and Final Offers. Copies of such Amendments as may be issued will be furnished to all prospective Proposers through the PMSS.

3. If the revisions under Amendments would require material changes in the Proposals, the date set for the receipt of Proposals may be postponed by such number of Days as in the opinion of the Authority will enable Proposers to revise their Proposals. In such cases, the Amendment will include an announcement of the new date for the receipt of Proposals.

H. Acknowledgment of Amendments:

1. Proposers are required to acknowledge receipt of all Amendments to this Solicitation on copies of the Proposal Forms, Sections 00 41 20, TECHNICAL PROPOSAL FORM, and 00 41 30, PRICE PROPOSAL FORM, in the space provided. Failure to acknowledge all Amendments may cause the Proposal to be considered non responsive to the Solicitation, which would require rejection of the Proposal.

2. Modifications of Proposals already submitted due to the revisions listed in an Amendment will be considered if received at the office designated in this Request For Proposal by the time set for receipt of Proposals. Modifications of either Technical Proposal or Price Proposal shall be submitted separately and forwarded to the Contract Administrator through the PMSS.

3. If this Solicitation is amended, all terms and conditions, which are not modified, remain unchanged.

I. Submission/Withdrawal of Proposals/Offers:

1. Technical and Price Proposals shall be submitted as electronic files through the PMSS as directed in this Paragraph I.

2. The Proposer shall show on the cover sheet of each separate Technical Proposal and Price Proposal electronic file the hour and date specified in the Solicitation for receipt of Proposals, the Contract number, the name and address of the Proposer and whether the enclosed Proposal is a Technical Proposal or a Price Proposal. Failure to do so may result in a premature opening of or a failure to open such Proposal.

3. Proposals may be electronically submitted to the Contract Administrator as shown in Section 00 10 10, REQUEST FOR PROPOSAL.

4. Facsimile Proposals will not be considered.

5. Proposals may be withdrawn by written notice before award. Proposals may be withdrawn in person by a Proposer or an authorized representative, if the representative's identity is made known and the representative signs a receipt for return of the Proposal before award.

J. Late Proposals, Modifications, or Withdrawals:

1. All Proposals not submitted electronically in the PMSS to the Authority's Office of Procurement, through the projects Contract Administrator, before the specified closing time on the date of closing will be late and considered non-responsive.

2. All modifications of a Proposal, except a modification resulting from the Contracting Officer's request for a Best and Final Offer, are subject to the conditions stated above.

3. A modification resulting from the Authority's request for Best and Final Offer received electronically in the PMSS after the time and date specified in the request will not be considered unless it is received before award.

K. Proposal Guarantee:

1. A Proposal guarantee is required by the Request for Proposal. Failure to furnish a Proposal guarantee in the proper form and amount with the Price Proposal, by the time set for the receipt of Proposals, may be cause for rejection of the Proposal. Proposal guarantee shall be sealed, marked, and submitted in an envelope by the Proposer and received at the Office of Procurement, Washington Metropolitan Area Transit Authority, Office of Procurement, PRMT File Room 3C-02, 600 Fifth Street, N.W., Washington D.C., 20001 by the specified closing time on the date of closing.

2. A Proposal guarantee shall be in the form of a firm commitment, such as a Proposal bond (see Section 00 43 10, PROPOSAL SECURITY (Proposal Bond Form)), postal money order, certified check, cashier's check, irrevocable letter of credit from a State or Federally chartered bank or, in accordance with Treasury Department regulations, or certain bonds or notes of the United States. Corporations executing the Proposal bond as sureties must be among those appearing on the Treasury Department's list of approved sureties and must be acting within the limitations set forth therein. Proposal guarantees, other than Proposal bonds, will be returned as follows:

   a. To unsuccessful Proposers: As soon as practicable after the receipt of Proposals.

   b. To the successful Proposer:

1) Upon execution of such further contractual documents and bonds as may be required by the Proposal as accepted.

2) If the successful Proposer, upon acceptance of its Proposals by the Authority within the Acceptance Period, fails to execute such further Proposal guarantees and give such bond(s) as may be required by the terms of the Contract, its Contract may be terminated for default. In such event, the successful Proposer shall be liable for any cost of procuring the Work, which exceeds the amount of its Proposal, and the Proposal guarantee shall be available toward offsetting such difference.

L. Minimum Proposal Acceptance Period:

1. Acceptance Period, as used in this Section, means the number of Days available to the Authority for awarding a contract from the most current date specified in this Solicitation for receipt of Proposals or from the most current date specified for receipt of Best and Final Offers if applicable.

2. The Authority requires an Acceptance Period of 120 Days from the due date of Best and Final Offer.

M. Contract and Bonds: The Proposer whose Technical and Price Proposals are accepted shall, within the time established in this Solicitation, enter into a written contract with the Authority and furnish performance and payment bonds on standard Authority forms in the amounts indicated in Section 00 60 00, BONDS AND CERTIFICATES.

N. Solicitation Documents:

1. Solicitation Documents are available as indicated in Article 00 20 01, E – Invitation Documents.

O. Conditions Affecting the Work:

1. Proposers are required to visit the Project Site to conduct a preliminary Site-condition survey to ascertain the nature and location of the Work and the general and local conditions, which can affect the Work or the cost thereof. See Section 00 25 00, PRE-PROPOSAL MEETINGS SCHEDULE, for further details.

2. As discussed in Section 00 31 00, EXISTING CONDITIONS, Proposers may examine records of all original borings, test excavations, and other subsurface investigations and existing utilities and environmental investigations, if any, made for the Authority prior to the design and construction of the Project.

3. DELETED

P. Opportunity for Disadvantaged Business Enterprises to Propose: The Washington Metropolitan Area Transit Authority hereby notifies all Proposers that the Proposer shall ensure that in regard to any contract entered into pursuant to this Solicitation, disadvantaged business enterprises will be afforded full opportunity to submit Proposals in response to this Solicitation and will not be discriminated against on the grounds of race, color, or national origin in consideration for award.

Q. Disadvantaged Business Enterprises: (See Section 00 45 30, DBE DATA**)**

1. It is the policy of the Authority (WMATA) that Disadvantaged Business Enterprises (DBEs) shall have an equal opportunity to receive and participate in performing WMATA contracts, including contracts and subcontracts at any tier, and of the Federal Transit Administration (FTA) and the U. S. Department of Transportation (US DOT) in receiving and participating in federally assisted contracts. The DBE requirements, if any, are set forth in Section 00 45 30,

DBE DATA, and in Section 00 76 05, DISADVANTAGED BUSINESS ENTERPRISE, to this Solicitation, and are applicable if the Proposal is $500,000 or more for construction (and construction-related) contracts and for supply and service contracts having a total dollar value of $100,000 or greater. The DBE goal percentages, if applicable, are listed in Section 00 86 05, DISADVANTAGED BUSINESS ENTERPRISE.

2. If the Proposer is not a DBE, then the DBE goal set forth in Section 00 86 05, DISADVANTAGED BUSINESS ENTERPRISE, if any, shall be met by Subcontracts or joint ventures with DBEs.

3. If a DBE goal is specified in Section 00 86 05, DISADVANTAGED BUSINESS ENTERPRISE, the Proposer shall submit with its initial Price Proposal a list of WMATA-certified DBE firms that it intends to enter into subcontract agreements with for this Contract. The documentation requirements of Section 00 45 30, DBE DATA, shall be completed and submitted at the time set forth for the submittal of Best and Final Offer to the Authority for any contract in which a DBE goal is applicable. Also, if no goal is specified in Section 00 86 05, DISADVANTAGED BUSINESS ENTERPRISE, but the Proposer still intends to utilize DBEs in the performance of this Contract, the Proposer shall submit with its initial Price Proposal a list of those WMATA-certified DBE firms. Proposers who fail to complete and return this information, if applicable, with their Best and Final Offer Price Proposal will be deemed to be non-responsive and will be ineligible for contract award. The documentation requirements, if applicable, are as follows:

   a. SCHEDULE OF DBE PARTICIPATION and executed LETTER(S) OF INTENT TO PERFORM AS A SUBCONTRACTOR/JOINT VENTURE with agreed price sufficient to meet the DBE goal set forth in Section 00 86 05, DISADVANTAGED BUSINESS ENTERPRISE; or

   b. A request for waiver of the DBE goal or portion of the goal, if any, and reasons therefore as stipulated in Paragraph F.3 of Section 00 45 30, DBE DATA. Request must be made on company stationery and signed by the responsible official.

4. Proposers that fail to meet the DBE goal set forth in Section 00 86 05, DISADVANTAGED BUSINESS ENTERPRISE, if any, and fail to demonstrate “good faith efforts” to justify waiver of the DBE goal, if any, may be deemed to be non-responsive and will be ineligible for contract award.

5. In connection with the performance of this Contract, the Design-Builder agrees to cooperate with the Authority in meeting its commitments and goals with regard to the maximum utilization of Disadvantaged Business Enterprises (DBE), and further agrees to exert good faith efforts to satisfy the requirements of Section 00 45 30, DBE DATA, if applicable, by subcontracting portions of the Work to disadvantaged firms, by entering into joint ventures with disadvantaged firms, or both.

6. If there is no goal in this Contract, DBE participation is encouraged and pursuant to the Authority’s race-neutral program, is anticipated to be as specified in Section 00 86 05, DISADVANTAGED BUSINESS ENTERPRISE.

R. Civil Rights: The Design-Builder will be required to comply with all applicable Equal Employment Opportunity laws and regulations of Section 00 76 04, CIVIL RIGHTS.

S. Debarred or Ineligible Proposers: All Proposers will be required to certify that they are not on any list of ineligible or debarred contractors (see Section 00 45 10, REPRESENTATIONS AND CERTIFICATIONS FORM).

T. Notice of Protest Policy:

1. WMATA policy and procedure for the administrative resolution of protests is set forth in Chapter 20 of the Procurement Procedures Manual (PPM). The PPM contains strict rules for

filing a timely protest, for responding to a notice that a protest has been filed, and other procedural matters. The Contracting Officer can furnish a copy of Chapter 20 upon request.

2. FTA Circular C 4220.1F, paragraph 7.l addresses Bid Protests. Review of protests by FTA is discretionary and will be limited to:

   a. a grantee's failure to follow its protest procedures or its failure to review a complaint or protest; or

   b. violations of Federal law or regulation.

3. A protester must exhaust all administrative remedies with the Authority before filing an appeal to the FTA. An appeal to FTA must be received by the cognizant FTA regional or Headquarters Office within five working days of the date the protester learned or should have learned of an adverse decision by the Authority of other basis of appeal to FTA.

4. Alleged violations on other grounds must be submitted to the Contracting Officer who will decide the protest.

5. The judicial authorities having jurisdiction over court actions concerning protest decisions are the United States District Courts for the Districts of the Commonwealth of Virginia, and the District of Columbia, and the local courts in State of Maryland, Commonwealth of Virginia, and the District of Columbia.

U. Requirement for Cost Data Prior to Contract Award: The Authority has determined that certified cost or pricing data are not required for this Solicitation based on the anticipation of adequate price competition. If after receipt of Price Proposals the Authority determines that adequate price competition no longer exists, the Authority will require the Proposer(s) to submit cost data in sufficient detail to permit analysis of the cost elements which make up the proposed price(s). The preparation, submittal, and certification of Certified Cost or Pricing Data shall be as described by FAR 15.4 and in Section 00 70 00, GENERAL CONDITIONS.

V. Davis-Bacon Wage Determination Decision: The Authority's Compact requires that all mechanics and laborers employed by Design-Builder, Subcontractors, or employed as an Independent Contractor or contract employee on construction and maintenance contracts be paid wages not less than those prevailing on similar contracts in this locality as determined by the Secretary of Labor in accordance with Section 00 76 07, LABOR PROVISIONS. The Wage Determination Decision of the Secretary of Labor is referred to in Section 00 76 07, LABOR PROVISIONS, and attached as APPENDIX D in Section 00 80 00, SUPPLEMENTARY CONDITIONS.

W. WMATA's Tax Exempt Status:

1. Pursuant to Article XVI, Paragraph 78, of the Washington Area Metropolitan Transit Authority Compact, as adopted by the State of Maryland, the District of Columbia, and the Commonwealth of Virginia, with the authorization and consent of the Congress of the United States, the Authority has been accorded exemption from taxes as follows:

   a. "The Authority and the Board of Directors shall not be required to pay taxes or assessments upon any of the property acquired by it or under its jurisdiction, control, possession or supervision, or upon its activities in the operation and maintenance of any transit facility or upon any revenues there from, and the property and income derived there from shall be exempted from all Federal, State, District of Columbia, municipal, and local taxation. This exemption shall include without limitation, all motor vehicle license fees, sales taxes and motor fuel taxes."

2. It has been the practice of the District of Columbia to apply the Authority's tax-exempt status to certain purchases of materials required under Authority construction contracts and acquired by Design-Builders for physical incorporation into the Work. This has not been the practice in either Maryland or Virginia. The Authority does not represent or warrant that the District of

Columbia practice applies to this Project or, if it does, that it will continue in effect during the term of this Project. It is the responsibility of the Design-Builder to determine its liability for any and all taxes applicable to this Project. Assessment or payment of taxes by the Design-Builder, including taxes resulting from changes in existing laws or the application thereof or of new or additional taxes, shall not constitute the basis for an increase in the Contract price, except as otherwise allowed under Section 00 77 01, FEDERAL, STATE, AND LOCAL TAXES.

3. By submission of its Proposal, the Proposer certifies that none of the taxes to which the Authority is exempt are included in its Proposal price(s) or the final Contract Price. In the event that the Authority learns that any taxes to which the Authority is exempt are included in the final Contract Price, the Authority shall be entitled to a reduction in the Contract Price reflecting such amount and a refund of monies paid related to such taxes, plus applicable interest.

X. Advance Cost Agreement: Within 30 Days after Notice of Award, the Design-Builder shall make available for audit review, information on its accounting system used to project fixed and variable overhead rates applicable to possible Contract Modifications. The Authority's Office of the Auditor General, to the extent possible, will review and approve said accounting system. When appropriate and if possible, as a result of the audit review, Advance Cost Agreements may be executed between the Contracting Officer and the Design-Builder. The Cost Agreements shall be a supplemental agreement to the Contract.

Y. Proprietary Data in Proposals:

1. The Authority will provide all reasonable precautions to ensure that proprietary, technical, and pricing information remains within the review process except where otherwise ordered by an administrative or judicial body or necessary to use in a judicial or administrative proceeding. Proposers shall attach to each page of all proprietary data submitted with the Solicitation the following notation:

   a. "This data furnished pursuant to this RFP shall not be disclosed outside the Authority, be duplicated, or used in whole or in part for any purpose other than to evaluate the offer; provided that, if a contract is awarded on the basis of that offer, the Authority shall have the right to duplicate, use, and disclose this data, in any manner and for any purpose whatsoever."

2. The Authority's right to use information contained in these data is not limited if the information is or has been obtained by the Authority from another independent legitimate source.

3. Except for the foregoing limitation, the Authority may duplicate, use, and disclose in any manner and for any purpose whatsoever and have others so do, all data furnished in response to this Solicitation.

Z. Contract Performance Evaluation: The Proposer is advised that a Performance Evaluation will be completed at the end of the Contract. Factors to be included in the Performance Evaluation are as follows: Quality of Work, Timely Performance, Effectiveness of Management, Compliance with Labor Standards, Compliance with Safety Standards, and an Overall Evaluation. The Performance Evaluation may be used in determinations of responsibility for future WMATA contracts.

00 20 02 PROPOSAL FORMAT

A. Proposal Page and Character Size: The page size shall not exceed 8-1/2 by 11 inches, except for foldouts, which may not exceed 11 by 17 inches. The page margins shall not be smaller than one inch on all four sides. The type size for text shall not be smaller than 12 point, with at least a line spacing of one. The type size for figures and tables shall be no smaller than 8 point.

B. Elaboration: Legibility, clarity, and completeness are essential. Unnecessarily elaborate brochures or other presentations beyond that sufficient to present a complete and effective Proposal are not

desired and may be construed as an indication of the Proposer's lack of cost consciousness. Elaborate artwork, expensive paper and bindings, and expensive visual and other presentation aids are neither necessary nor wanted.

C. Completeness: Include all forms and Project-specific information as required in this Section. Include pre-printed literature if directly relevant to this Project. Failure to provide forms or any other information required in the response to this Solicitation may cause the Offer to be deemed non-responsive, and the Offer may be subsequently rejected.

D. Organization: The Technical Proposal and the Price Proposal shall be submitted in separate volumes. The Technical Proposal shall not contain any information that either directly or indirectly indicates the price of the Project as a whole or of any individual elements.

E. Identify each volume with the RFP number, the Project Name and Contract Number, the Volume Number of the total number of volumes (i.e., Volume 1 of 3, etc.), the Volume Title, and the Proposer's identity, all identified on the Cover Sheet of the Volume. Provide electronic copies as specified in this Section. The Technical Proposal shall be submitted in both its native electronic format and in a bookmarked Adobe (.PDF) format. The native format is to include the latest Microsoft Word (.DOCX), Microsoft Excel (.XLSX) and/or AutoCAD (.DWG) drawing format. Price Proposal documents shall be submitted as a separate document in both its native electronic format and in a bookmarked Adobe (.PDF) format. The native format is to include the latest Microsoft Word (.DOCX) and/or Microsoft Excel (.XLSX) format. Electronic documents shall also be submitted for all Amendments in the same format as specified in this Section.

1. The Design Builder is advised that the minimum requirement for AutoCAD file format shall be coordinated with the Contract Administrator.

F. Proposal Copies and Page Count Limits: Provide one electronic copy as specified in this Section. Proposals are limited to the following page limits listed below and will be evaluated up to these page limits. Page limits include all text, charts, figures, diagrams, and schematics. Cover pages, title pages, tables of contents, tabbed dividers, and blank pages are not included in the page limitations.

Volume	Part	Title	Copies	Page Limits
1	1	Work Approach	N/A	N/A
1	2	Past Performance and Experience	N/A	25
1	3	Key Personnel	N/A	N/A
1	4	Designer	N/A	15
1	5	Safety	N/A	1
1	6	Schedule	N/A	N/A
1	7	Project Challenges	N/A	15
#				#
1	9	Quality Control Experience	N/A	15
# 1	10	Revised Development Special Use Permit (DSUP) Submission	N/A	N/A #

G. Price Proposal

Volume	Part	Title	Copies	Page Limits
2	A	Price Submission	N/A	N/A
2	B	Forms and Contractual Information	N/A	N/A

00 20 03 TECHNICAL AND PRICE PROPOSAL PROCEDURES AND EVALUATION FACTORS, AND INSTRUCTIONS

A. Technical Proposal Evaluation Procedures:

1. Each Technical Proposal will be reviewed and evaluated individually by the Authority in accordance with procurement policy and procedures.

2. Proposals will be evaluated by their strengths, weaknesses, and deficiencies against the evaluation factors and these attributes will be communicated to the proposers for follow-up action as appropriate.

3. Definitions:

a. Discussions: Oral or written communications including One-on-One Meetings and negotiations between the Authority and an Offeror (other than clarifications) that involve information essential for determining the acceptability of the Proposal or to rectify identified defects in the Proposal.

b. Clarifications: Communication with an Offeror for the sole purpose of eliminating minor irregularities, informalities, or apparent clerical mistakes in the Proposal. Unlike discussions, clarification does not give the Proposer an opportunity to revise or modify its Proposal, except to the extent that correction of apparent clerical mistakes results in revision. All clarifications submitted by the Proposer must be in one location and in accordance with Section 00 43 40, PRICE PROPOSAL SCHEDULE.

c. Deficiencies: Defects in the Proposal could preclude acceptance. Involves any part of the Proposer's Proposal, which would not satisfy the Authority's evaluation standards established in the Solicitation. Includes failures to meet specifications, submit information, or questionable technical or management approaches. Deficiencies identified during the evaluation of the Proposal will be of one of two categories:

1) Material: Material-basis for rejection because further discussions would not be prudent.

2) Curable: May be corrected by clarification or discussions and brought into the acceptable range.

d. Weakness: Includes ambiguities, lack of complete descriptions, errors in interpretation, omissions of essential information, and inadequate information, all of which are considered reparable in discussions. An excessive number of clarifications may in itself constitute a weakness.

e. Strengths: Elements of the Proposal that exceed the evaluation standards of the Solicitation and provide an identified benefit to the Authority.

4. Ratings: Based upon the evaluations, an adjectival rating will be given depicting how well the Proposer's Proposal meets the stated evaluation factors and Solicitation requirements for the Technical Proposal. The adjectival criteria are as follows:

a. Exceptional: Exceeds evaluation standards in a beneficial way to the Authority, has many significant strengths and no weaknesses or deficiencies, and is innovative, comprehensive, and complete in all details.

b. Exceeds: Exceeds evaluation standard in a beneficial way to the Authority, has some strengths and no significant weaknesses, and is comprehensive and complete in all details.

c. Acceptable: Meets evaluation standards and any weaknesses are readily correctable.

d. Marginal: Fails to meet evaluation standards, however, any significant deficiencies are correctable. The Proposal lacks essential information to support Proposal.

e. Unacceptable: Fails to meet an evaluation standard and the deficiency is uncorrectable. Proposal would have to undergo a major revision to become acceptable. The Proposal has demonstrated lack of understanding of the Authority's requirements or omissions of major areas.

5. Each Technical Proposal Evaluation Factor is equally important and is not listed in any order in regards to importance or weighting.

B. Technical Proposal Evaluation Factors:

1. Work Approach:

a. Proposer shall describe in detail its means and methods of prosecuting the Work described in this Solicitation.

The Proposer's response will be rated based on its application of its expertise working on a live railroad performing design and construction of the work included in the scope; and credibility and realism of the proposed approach.

2. Past Performance and Experience:

The Proposer must detail its experience on Design-Build project(s) of similar size and complexity. The list shall describe similar projects completed within the last (10) ten years or currently in progress. The list of projects shall include:

1. Name and location of project;
2. Name of the owner;
3. Name and phone number of contact person;
4. Value of contract;
5. Percentage of Contract that was self-performed, and
6. General description of the project.

Proposers are advised that the Authority reserves the right to contact any and all clients and Transit Agencies listed.

Response to this Evaluation Factor shall not exceed 25 pages with 12 pt. font text.

3. Key Personnel

Submit the following information regarding the qualification and experience of individuals proposed by Design Builder as Key Personnel.

1. Identify the Key Personnel and their company affiliation within Design Builder's Team.

2. Resumes with appropriate details and work history for those individuals from the Design Build team who will have overall responsibility for the delivery of The Potomac Yard Metrorail Station.

   - Project Manager, In charge of design and construction of the Project as a whole, with overall responsibility for the successful and timely completion of the Project
   - Design Engineering Manager, Architect of Record, Engineers of Record, who will be responsible for key design activities and decisions in their respective disciplines.
   - Construction Manager, who will be responsible for implementation of the design during construction and for all construction activities.
   - Safety Superintendent/Manager, who will be responsible for overall project safety.
   - Construction General Superintendent, responsible for oversight of the day-to-day construction at the site
   - LEED Coordinator, responsible for managing all aspects of LEED Certification
   - Systems Integrator, who will be a liaison between the Design Manager, Construction Manager, Project Manager, and the City of Alexandria.
   - Quality Manager, who will be responsible for all quality assurance and quality control on the project.

4. Designer:

   b. The proposer shall identify the Designer that completes the Design-Build team and describe similar projects completed within the last ten (10) years or currently in progress. The list of similar projects shall include:

      1. Name and location of project;
      2. Name of the owner;
      3. Name and phone number of contact person;
      4. Value of contract;
      5. General description of the project.

      Response to this Evaluation Factor shall not exceed 15 pages with 12 pt. font text.

   The Authority reserves the right to contact any and all clients and/or transit agencies listed.

5. Safety

   Proposers must provide the Design-Builder's OSHA Lost Time Injury Incidence Rate (LTIIR) and Experience Modification Rating (EMR) for each of the preceding 3 years. If the Proposer is a Joint Venture, the EMR will be an Average of the Joint Venture Partners.

   Note: The Authority will not award the Contract to any Proposer whose EMR exceeds 1.0.

6. Schedule

   a. Proposer must develop and submit an Executive Summary of the Project Schedule, not exceeding 500 items. The schedule shall depict the Work submitted for Item 1, Work Approach. The schedule shall include durations for all major activities.

      Response to this Evaluation Factor does not have a page limit but shall not exceed 500 items.

7. Project Challenges

a. Design Builders must demonstrate their understanding of the issues and challenges associated with the design, construction and commissioning of the Potomac Yard Metrorail Station, and identify potential solutions. This shall consist of a narrative and graphics that identifies such issues and challenges and describes potential solutions

Response to this Evaluation Factor shall not exceed 15 pages with 12 pt. font text.

8. Alternative Technical Concepts

a. The Design Builder shall provide the information required under Section 00 24 10 ALTERNATIVE TECHNICAL CONCEPTS (ATC).

Response to this Evaluation Factor does not have a page limit.

9. Quality Control Experience

a. Provide the Table of Contents of the proposed Project Quality Management Plan with a one sentence description of each item in the Table of Contents. Provide internal audits (include documentation of close-out of audit findings) of a project submitted under the Past Experience factor. One audit shall be from the mid-point of the design phase. A second audit shall be from the mid-point of construction.

Response to this Evaluation Factor shall not exceed 15 pages with 12 pt. font text. Copies of required audits will not count against page limits.

10. DSUP Amendment Submittal

a. Provide a revised draft of the city of Alexandria Development Special Use Permit (DSUP) application, in a form ready for submittal. The draft application shall incorporate the Proposer's Alternative Technical Concepts as set forth in Section 00 24 10 ALTERNATIVE TECHNICAL CONCEPTS (ATC)

Response to this Evaluation Factor has no page limit.

C. Technical Proposal Instructions: The information provided should be complete and clearly presented. If the information requested under a factor is presented elsewhere in the Proposal, the Proposer should cross reference this information that is provided elsewhere rather than duplicate it.

1. Complete, sign, and submit Section 00 41 20, TECHNICAL PROPOSAL FORM.

D. Price Proposal Evaluation Procedures: Price Proposals will be evaluated only for those Proposers, who's Technical Proposals have been determined to be technically acceptable.

1. The Authority will evaluate Price Proposals for price reasonableness using cost or price analysis as deemed appropriate by the Authority in accordance with FAR 15.4. If cost analysis is appropriate, then the Proposer will furnish all necessary cost data of all direct and indirect cost elements and profit for all major work efforts in sufficient detail to permit an analysis by the Authority.

2. The Authority may determine that a Price Proposal is unacceptable if the prices proposed are materially unbalanced between line items or sub-line items. A price is materially unbalanced when the price of one or more line items is significantly overestimated or underestimated as indicated by the application of price analysis techniques. A materially unbalanced price presents an unacceptable risk to the Authority.

E. Price Proposal Evaluation Factors:

1. The Authority will evaluate Price Proposals for completeness, clarity, conciseness, and responsiveness to the RFP-requested information.

2. Submittal of proposed prices for both the Base and the Options, if any. Failure to do so will necessitate rejection of the Proposal.

3. Materially unbalanced prices: Proposals that are materially unbalanced as to prices for the various categories of work items may be rejected as non-responsive.

4. The Authority will compare the Price Proposals to the Authority estimate and otherwise determine reasonableness by performing a price analysis if adequate competition exists. A cost analysis will be performed, if adequate price competition does not exist, to ascertain whether or not the proposed price is fair and reasonable. The Authority may request that Proposers provide a cost breakdown, which identifies major cost drivers and request supporting documentation, such as Supplier and Subcontractor quotes in support of their Proposal.

F. Price Proposal Instructions: The information provided should be complete and clearly presented. If the information requested under a factor is presented elsewhere in the Proposal, the Proposer should cross reference this information that is provided elsewhere rather than duplicate it.

1. Complete, sign, and submit Section 00 41 30, PRICE PROPOSAL FORM. Additionally, submit the following:

a. Signed and completed Section 00 45 10, REPRESENTATIONS AND CERTIFICATIONS FORM.

b. A completed Section 00 43 40, PRICE PROPOSAL SCHEDULE, with an amount on each line item where one is requested and a total amount representing the sum of individual amounts requested.

1) Price Proposal Schedule prices shall include all services, labor, material, equipment, overhead, incidentals, and profit, unless otherwise specified.

2) In case of a discrepancy between a unit price and an extended price, the unit price will be presumed to be correct, subject however, to correction to the same extent and in the same manner as any other mistake.

3) Where the Price Proposal Schedule explicitly requires that the Proposer propose on all items; failure to do so will disqualify the Proposal. When submittal of a price on all items is not required, Proposers shall insert the words NO PROPOSAL in the space provided for an item on which no price is submitted.

4) Proposals for design and construction services other than those specified will not be considered unless authorized by the Solicitation. Unless specifically called for, alternate Proposals will not be considered.

c. List of DBE-certified firms that it intends to enter into subcontract agreements with (if a DBE goal is specified in Section 00 86 05, DISADVANTAGED BUSINESS ENTERPRISE, or if no goal is specified in Section 00 86 05, DISADVANTAGED BUSINESS ENTERPRISE, but the Proposer still intends to utilize DBEs in the performance of this Contract).

NOTE: The submittal of certain items with the Offer is required if Offer is $100,000 or greater for the design portion and $500,000 or greater for the construction portion. Failure to submit Section 00 45 30, DBE DATA, forms waiver (if applicable), may cause the Offer to be found non-responsive and subsequently rejected.

d. An executed Proposal Guarantee with Surety Certificate (Section 00 43 10, PROPOSAL SECURITY (PROPOSAL BOND FORM)). The Proposal Guarantee shall be based on the Total Base Proposal Plus Total Option Price, if any. The Performance and Payment Bonds shall be based on the award amount.

e. A signed and completed Section 00 45 20, PROPOSAL DATA FORM, with attachments.

G. Oral Technical Presentations:

1. Oral presentations may be requested only from Proposers that have not been eliminated from the competition. The oral presentation shall address the same topics as in the written Technical Proposal. The oral presentation shall be provided by the proposed key members of the Proposer's project team. Proposers' major Subcontractors/DBE representatives are also urged to attend. Total presentation time, including clarifications, shall be no longer than 2 hours.

2. At its sole discretion, the Authority will schedule oral presentations at the Headquarters of the Washington Metropolitan Area Transit Authority at 600 Fifth Street, N.W., Washington, D.C. 20001. Requests from Proposers to reschedule their oral presentations are discouraged. No rescheduling will be done unless determined necessary by the Contracting Officer. The oral presentations will take place after Proposals have been received by the Authority and prior to the Authority’s request for a Best and Final Offer (BAFO),

3. Oral presentations will be held in a conference room with conference-room style seating. The Authority will provide only a projection screen.

4. Oral presentations will not constitute discussions or oral Proposals, as the Authority reserves the right to make an award without discussions. The Authority will not inform the Proposer of its strengths, deficiencies, or weaknesses during the presentation.

5. No cost/price information shall be included in the oral presentation or in any accompanying written information.

6. The Proposer shall provide six printed copies of its presentation in 8.5-inch by 11-inch format to the Contracting Officer at the time of the presentation. No other documentation of the oral presentations will be accepted. No change to the Proposer's written Proposal will be accepted at the oral presentation.

7. After completion of the oral presentation, the Authority may request clarification of any of the points addressed during the oral presentation, which are unclear, and may ask for elaboration by the Proposer on any point, which was not adequately supported in the presentation. Any such exchange will be for clarification only and will not constitute discussions. Further, no exchange during the oral presentation shall constitute a change to the Solicitation. The time required for Clarifications will be counted against the Proposer's 2-hour time limit.

8. The Authority reserves the right to videotape or to audiotape each Proposer's oral presentation.

H. Clarifications and Discussions:

1. Clarifications: Anytime during the evaluation process of the Technical and Price Proposals, the Authority may engage in limited exchanges with the Proposers to request clarifications of any of the points, which are unclear, and to resolve minor or clerical errors. Any such exchange will be for clarification only, and will not constitute Discussions within the meaning of FAR 15.306.

2. Discussions: The Authority contemplates that discussions will be necessary to maximize the Authority’s ability to obtain best value. However, after BAFO, the Authority reserves the right to award a contract without discussions or any contact with the Proposers. If the Authority

determines that discussions are necessary, it will establish a competitive range and schedule discussions with all Proposers in the competitive range. The Authority will maintain confidentiality of all Proposals.

a. Discussions will be held at the Headquarters of the Washington Metropolitan Area Transit Authority at 600 Fifth Street, N.W., Washington, D.C. 20001. Requests from Proposers to reschedule their discussions are discouraged, and no rescheduling will be done unless determined necessary by the Authority.

b. A description of Proposal deficiencies will be provided to Proposers in the competitive range for revision or modification of their Proposal. Technical Proposal weaknesses and deficiencies will be discussed as well as adverse past performance information with all Proposers in the competitive range.

c. Negotiations will be conducted and may include bargaining and trade-offs. The Authority will establish pre-negotiation objectives with regard to price and technical factors tailored to each Proposal. The Authority may negotiate with Proposers to increase its performance for additional technical merit. Also, the Authority may suggest to Proposers that they decrease their performance and reduce their costs to make their Proposals more competitive. The Proposers will also be given an opportunity to correct errors and omissions in their Price Proposals.

d. After discussions have begun, the Authority may determine that a proposer is no longer considered among the highest rated proposers and may eliminate that proposer from the competition whether or not all material aspects have been discussed or the Proposer has been afforded the opportunity to submit a Proposal revision.

e. If discussions are held, the Authority will request Proposal revisions, and Best and Final Offers as appropriate from all Proposers remaining in the competitive range.

BEST VALUE DETERMINATION: THE TECHNICAL MERIT OF THE PROPOSAL IS SIGNIFICANTLY MORE IMPORTANT THAN THE PRICE, AND THE PRICE MUST BE FAIR AND REASONABLE. THE AUTHORITY MAY SELECT OTHER THAN THE LOWEST PRICED PROPOSAL IF IT IS DETERMINED BY VALUE ANALYSIS, OR TECHNICAL/COST TRADE-OFFS, THAT THE PROPOSAL OFFERS THE GREATEST OVERALL BENEFIT TO THE AUTHORITY. AS PROPOSALS BECOME MORE TECHNICALLY EQUIVALENT, THEN PRICE BECOMES MORE IMPORTANT.

00 21 00 SUPPLEMENTARY INSTRUCTIONS TO PROPOSERS

A. DELETED

00 24 10 ALTERNATIVE TECHNICAL CONCEPTS (ATC)

A. Definition: ATCs are contractor-proposed modifications to the Project Directive Drawings and/or specifications. ATCs shall be submitted with bids. Owner will review and determine which ATCs are acceptable for incorporation in the Contract.

B. Content: ATCs shall be included with Bid Form except as noted otherwise below, and shall include the following:

1. ATC Number: Each ATC shall be assigned a sequential number.

2. Description: Provide a description and conceptual drawings of the configuration of the proposed ATC or other appropriate descriptive information. Provide a listing of requirements based on Table of Contents as specified and complied with.

3. Exceptions: Provide a summary of deviations from the Contract Documents, if any, that would be necessary to implement the ATC as submitted. Identify how deviations improve overall performance, delivery, longevity, or other benefits derived from deviation.

4. Construction-period Impacts: Provide a description of modifications, if any, to construction-period operations and schedule.

5. Code Compliance: Provide a narrative demonstrating code compliance with regard to the ATC.

6. Risks: Provide a description of added risks to the Owner or third parties associated with implementing the ATC.

7. Maintenance Requirements: Provide a summary of changes in routine or capital maintenance requirements, if any, that would result from the ATC including long-term and short-term effects. Note downtime, outages, and other effects ATC will have on maintenance practices if implemented.

8. Savings: State the cost savings that would accrue to the Owner should the ATC be approved and implemented on the form provided in SECTION 00 43 40 PRICE PROPOSAL SCHEDULE. Do not include pricing information in Technical Proposal.

C. ATC Acceptance Criteria: ATC's that do not meet the following pass/fail criteria will not be considered.

1. ATCs shall be compliant with the WMATA Manual of Design Criteria, applicable codes, and regulations;

2. ATCs shall not increase the Project Limit of Disturbance (LOD), nor necessitate modifications to environmental approvals obtained by Owner;

3. ATCs shall not require Metrorail service interruptions greater than 72-hour weekend shutdowns for purposes of construction;

4. ATCs shall not modify zinc roof materials and natural stone finishes;

5. ATCs must maintain the north entrance pavilion and pedestrian bridge in the location specified in Section 32 05 10;

6. ATCs must retain the architectural character of the original RFP design and DSUP Drawings;

7. ATCs shall provide safe, convenient, ADA-compliant access to the station for pedestrians and cyclists approaching from Potomac Greens Drive and Carpenter Road.

D. One-on-One Meetings

1. Purpose of one-on-one meetings is to obtain WMATA and City of Alexandria feedback on potential ATCs

2. Two (2) One-on-One meetings will be scheduled for each proposer.

3. Agenda for the first One-on-One meeting:

   a. Proposer to advise whether the city's target price of $170,000,000 is reasonably attainable.

   b. Proposer presentation of potential ATC concepts;

4. Agenda for the second One-on-One meeting:

   a. Review draft revised DSUP submission;

   b. Agree in principle on ATC concepts that would be acceptable to the Owner. However, ATCs are subject to final approval as part of proposal evaluation, and further modification during BAFO negotiations.

5. WMATA and the City will treat One-on-One discussions confidentially.

6. Comments made by WMATA and the City at One-on-One meetings are non-binding.

E. Ownership of ATCs

1. All ATCs submitted become the intellectual property of the Owner. Owner has the right to use ATCs from unsuccessful proposers.

F. Stipends

1. Proposers who submit qualifying Bids and ATCs, but who are not selected, will receive a stipend of $500,000. Selected contractor does not receive a stipend. Include all costs in Proposal. If the contract is not awarded, all proposers will receive the stipend.

G. Incorporation of ATCs in Contract

1. Approved ATCs will be incorporated in the Construction Contract.

00 25 00 PRE-PROPOSAL MEETINGS SCHEDULE

A. Unless otherwise notified, a pre-Proposal conference will be held as noted in the Project Solicitation Schedule, Section 00 10 13, PROJECT SOLICITATION SCHEDULE. The purpose of

this conference will be to answer questions regarding, or requests for clarifications of, the Solicitation documents. It is requested that Proposers submit their questions and requests for clarifications of the terms, conditions, and requirements of this Request for Proposal to the Contracting Officer in writing either in advance of the meeting or during the meeting. Questions from the floor, however, are permissible.

B. Site visits will be limited to those Design Builders who submit a proposal and will be scheduled after the proposals are received.

C. Proposers are required to visit the Site of the Work and inform themselves of all local conditions that may affect the Work or the cost thereof.

D. The Site Visit will be scheduled by the Authority in advance and each appointment shall be limited to no more than 45 minutes. The Design Builders will be limited to one (1) appointment with a maximum number of six (6) members of the Design Build team in attendance. The Authority will not grant access to areas within the WMATA Right of Way including the tracks and Traction Power Substation (TPSS).

E. The Proposer acknowledges and agrees that it shall be bound by all the terms of the Contract regardless of its attendance at the pre-Proposal conference, or the thoroughness of its preliminary Site-condition investigation prior to submitting its Proposal.

00 26 00 PRE-AWARD MEETING

A. The Authority requires that a pre-award meeting with the successful Proposers be held prior to the actual award of the Contract. The purpose of the meeting will be to review the successful Proposer's understanding of the Contract Documents, contractual requirements prior to award, and to confirm the successful Proposer's capabilities, financial standing, and past experience.

B. The pre-award meeting will be held in the Washington Metropolitan area and shall be chaired by the Authority and attended by representatives of the Authority, the successful Proposer, and its Key Staff nominated for assignment to the Contract, the Designer, the Design-Builder, including major subcontractors if so requested by the Authority. Concerned parties shall each be represented by persons thoroughly familiar with and authorized to conclude matters relating to the Work described in the RFP Documents.

C. Agenda discussion items for the meeting may include, but are not limited to, the following:

1. Requirements for acceptability of payment and performance bonds.

2. Requirements for DBE participation.

3. Verification of qualifications of Key Staff. The Design-Builder shall not substitute any Key Staff identified in its Technical Proposal As Finally Accepted without the written approval of the Authority. The Design-Builder shall provide the Authority with all information as may be reasonably requested regarding substitutions, and any proposed substitutes shall share similar or better qualities than the person substituted.

4. Requirements for quality assurance/quality control.

5. Percentage of construction work to be performed by Design-Builder's forces.

6. Verification of successful Proposer's experience with similar work, including previous Authority contracts, scheduling capabilities, and financial standing.

7. Understanding of work described in the RFP Documents and the physical constraints associated with the Work.

8. Instructions for required submittals due at the Pre-Design-Build Meeting including updated Key Staff; Organizational Chart; firm, and Subcontractor identifications and qualifications; initial Project Management Plan, Quality Management Plan, Systems Integration Plan, Health and Safety Plan; Temporary Facilities Plan; and Permit and Regulatory Requirements Plan; 180-Day Schedule with cost loading; Description of Compliance with Contract Documents; Executed Contract Agreement; Power of Attorney Form; Power of Execution Form; performance Bond Form; Payment Bond Form; Insurance Certificates; and preliminary Schedule of Required Submittals.

D. Representations and commitments made by the successful Proposer or its Subcontractors will be construed as binding to the Contract.

END OF SECTION

00 34 00 WMATA SAFETY AND SECURITY REQUIREMENTS

A. This Section lists the safety and security related documents that establish the safety requirements for the Project.

1. WMATA Construction Safety and Environmental Manual (CSEM) Requirements: A compilation of the safety and reporting requirements for the Project.

2. WMATA Safety and Security Certification Program Plan (SSCPP): A compilation of the safety and security certification requirements for the Project.

3. 00 35 00 QUALITY ASSURANCE AND QUALITY CONTROL

B. Section 01470, QUALITY MANAGEMENT SYSTEM, establishes the quality requirements for the development of the Quality Management Plan by the Design-Builder for execution of the Project.

00 36 00 CUT-OVER STRATEGY

A. FTA-FQ15192-MCAP-001 Potomac Yard Metrorail Station Cut-Over Strategy, prepared by Mott MacDonald, dated May 30, 2017 is included in the RFP Documents and is provided for reference as an aid for the Proposer's preparation of their Proposals and for preparation of the Design Drawings by the Design-Builder.

END OF SECTION

SECTION 00 43 40

PRICE PROPOSAL SCHEDULE

(Submit with Proposal)

A. DESCRIPTION OF WORK

1. The Design-Builder shall Design and Build the Facilities in the manner and at the locations set forth in the RFP Documents of this solicitation, and in accordance with the Technical and Price Proposals as finally accepted by the Authority. The Design-Builder shall design the Work pursuant to the Contract Documents and the Rules and Regulations of the Jurisdictional Authorities, and shall construct the facility in strict accordance with the Issued for Construction Specifications and Issued for Construction Drawings and in full compliance with the Rules and Regulations of the Jurisdictional Authorities.

B. BASIS FOR AWARD

1. The best value evaluation of the Proposal by the Authority will consider the Total Base, Owner-selected elevator type, and Owner-approved ATCs as Finally Accepted.

C. PRICE PROPOSAL

Price Proposal Schedule

	Item #	Description	Note #	Est. Qty.	Unit	Unit Price	Total Amount	
	Base							
	1	Mobilization	1	1	LS	$3,000,000	$3,000,000	
	2	General Conditions	2	1	LS	$_____	$_____	
	3	Site Work	3	1	LS	$_____	$_____	
#	4	DELETED	4	1	LS	$_____	$_____	#
#	5	DELETED	5	1	LS	$_____	$_____	#
	6	Site Restoration and Mitigation	6	1	LS	$_____	$_____	
	7	Station Structure	7	1	LS	$_____	$_____	
	8	Station Finishes	8	1	LS	$_____	$_____	
	9	AC Room Building Construction and Equipment	9	1	LS	$_____	$_____	
#	10	DELETED	10	1	LS	$_____	$_____	#
	11	North Pedestrian Bridge and Pavilion	11	1	LS	$_____	$_____	
	12	Design Items 3 through 11		1	LS	$_____	$_____	
	13	Traction Power	12	1	LS	$_____	$_____	
	14	Communications	12	1	LS	$_____	$_____	
	15	Automatic Train Control	12	1	LS	$_____	$_____	
	16	Hazardous Waste	13	1200	CY	$_____	$_____	
	17	PCB-Contaminated Soil	14	1200	CY	$_____	$_____	
	18	Petroleum-Contaminated Soil 1	15	1200	CY	$_____	$_____	
	19	Petroleum Contaminated Soil 2	16	1200	CY	$_____	$_____	
	20	NOT USED	17		CY	$_____	$_____	

21	Permitting Allowance	18	1	Allow	$50,000	$50,000
22	Utility Allowance	19	1	Allow	$250,000	$250,000
					Total Base Price	**$_____**

Elevator Proposal Schedule

(Proposer shall provide pricing for both types. Owner will select one type for incorporation in the project).

Item #	Description	Note #	Est. Qty.	Unit	Unit Price	Total Amount
1	Hydraulic Elevators			LS	$_____	$_____
2	Gearless Traction Elevators			LS	$_____	$_____

ATC Proposal Schedule

(Proposer may add lines and item numbers if/as required)

Item #	Description	Note #	Est. Qty.	Unit	Unit Price	Total Amount
1				LS	$_____	$_____
2				LS	$_____	$_____
3				LS	$_____	$_____
4				LS	$_____	$_____
5				LS	$_____	$_____

Notes to Proposers

(1) The Mobilization costs shall include the premium costs for payment and performance bonds. The remaining mobilization costs shall be paid in six equal installments over the first six payment requests.

(2) Contractor shall provide a quotation for all cost elements that make up General Conditions. General Conditions costs shall not be included with any other cost elements proposed under items 1 and 3 through 24 above.

(3) Contractor shall provide a quotation for all work below station platform level, which includes, but is not limited to:

- earthwork
- retaining walls
- demolition
- grading and drainage
- stormwater management
- erosion and sediment control
- pavement, striping
- signage
- utilities
- perimeter fence

- treatment of contaminated water
- track work

All soil shall be assumed to be contaminated with arsenic above background concentrations. Quote shall include the cost of characterization, removal, transportation, and disposal.

(4) DELETED

-

(5) DELETED

-

(6) Contractor shall provide a quotation for the demolition and restoration of the Potomac Greens Drive traffic circle, the demolition and restoration of Old Town Greens tot lots and tennis courts removed for construction access and temporary relocation of tot lot. Old Town Greens tot lot shall be relocated to a site within Old Town Greens HOA.

(7) Contractor shall provide a quotation for all station structure work at and above the platform level, including platforms, mezzanines, and vertical transportation.

(8) Contractor shall provide a quotation for station finishes, which include, but are not limited to:

- paver tiles
- kiosks
- light fixtures
- platform edge
- platform lighting
- bathrooms
- benches

(9) Contractor shall provide a quotation for all costs related to the construction of off-site AC room and access road as well as all electrical equipment, ductbanks, conduit, and connections. Equipment costs include, but are not limited to design, installation, testing, and commissioning.

(10) DELETED.

(11) Contractor shall provide a quotation for the north pedestrian bridge and Entry Pavilion, connecting to the future North Potomac Yard development.

(12) Traction Power, Automatic Train Control, and Communications: Contactor shall provide a quotation for equipment costs which include, but are not limited to design, supply, installation, and testing.

(13) Hazardous Waste: The contractor shall provide a quotation for the removal and disposal of hazardous waste from the site. For inclusion in this category, soil must fail the toxicity characteristic leaching procedure. Soil in this category shall be assumed to be contaminated with other constituents, including, but not limited to, arsenic, petroleum, and benzene, toluene, ethyl benzene, and xylenes (BTEX). Quote shall include the cost of characterization, removal, transportation, and disposal.

(14) PCB-Contaminated Soil: The contractor shall provide a quotation for the removal and disposal of PCB-contaminated soil from the site. For inclusion in this category, concentration of PCBs shall exceed 1 mg/kg. Soil in this category shall be assumed to be contaminated with other constituents, including, but not limited to, arsenic, petroleum, and BTEX. Quote shall include the cost of characterization, removal, transportation, and disposal.

(15) Petroleum Contaminated Soil 1: The contractor shall provide a quotation for the removal and disposal of petroleum-contaminated soil from the site. For inclusion in this category, soils shall have a concentration of petroleum hydrocarbons (TPH) equal to or greater than 500 mg/kg, and/or of BTEX equal to or greater than 10 mg/kg. Soils in this category shall be assumed to be contaminated with arsenic above background. Quote shall include the cost of characterization, removal, transportation, and disposal.

(16) Petroleum Contaminated Soil 2: The contractor shall provide a quotation for the removal and disposal of petroleum-contaminated soil from the site. For inclusion in this category, soils shall have a concentration of petroleum hydrocarbons (TPH) equal to or greater than 50 mg/kg, and less than 500 mg/kg, and total BTEX less than 10 mg/kg. Soils in this category shall be assumed to be contaminated with arsenic above background. Quote shall include the cost of characterization, removal, transportation, and disposal.

(17) NOT USED

(18) The City of Alexandria shall waive all fees associated with obtaining City of Alexandria Permits. Fee schedules for all other permits required for the Potomac Yard Station, including, but not limited to, National Park Service, Virginia Department of Transportation, Corps of Engineers, and any other State or Federal permit required shall be the responsibility of the Design Builder.

SECTION 00 80 00

SUPPLEMENTARY CONDITIONS (RFP)

This Section includes Modifications to the Section 00 70 00, GENERAL CONDITIONS, for requirements unique to a specific project and is hereby incorporated into the General Conditions by reference. This Section 00 80 00, SUPPLEMENTARY CONDITIONS, which specifies modifications to the General Conditions, shall be read in conjunction with Section 00 70 00, GENERAL CONDITIONS, and which will be cited in Section 00 70 00, GENERAL CONDITIONS, using the same last two digits of the Section number; i.e., a modification to Section 00 72 05, COMMENCING THE WORK, is indicated as Section 00 82 05, COMMENCING THE WORK.

00 81 00 WORK BY DESIGN-BUILDER

Modify Section 00 71 00, WORK BY DESIGN-BUILDER, to delete Paragraph A. and substitute the following Paragraph:

A. The Design-Builder shall perform, with its own organization, work equivalent to at least 25% of the value for the construction work.

B. Self-Perform: A contractor who, by using their own employees, materials and/or equipment, is directly responsible for the completion of project components.

C. Self-Performed work incudes costs for:

1. Mobilization and utilization of Design Builder owned or rented plant and equipment to be operated by the design Builder's own employees and labor associated with eth aforementioned equipment

2. Design Builder's own labor to fabricate or to install materials into the finished construction

3. Performance by the Design Builder's own employees of design work, land surveys and other engineering or technical specialist services required by the contract

4. Supplies to directly support the aforementioned work to be accomplished by the Design Builder's own employees

5. Design Builders own project overhead costs

D. Self-Performed work does not include costs for:

1. Design Builder markups for profit, general and administrative overhead, bonds or other indirect costs on self-perform or subcontracted work and are to be excluded from the total cost of contract for calculations purposes.

2. Rental or purchase of plant or equipment for operation or installation by subcontractors

3. Cost of materials to be incorporated into the work and supplies to support other than construction by the Design Builder's own employees

E. The Percent of Self-Performed work is calculated by dividing the above defined cost of Self-performed work by the final cost of the contract and multiplying by 100%.

00 82 04 PROJECT SCHEDULE

Modify Section 00 72 04, PERIOD OF PERFORMANCE AND/OR PROJECT SCHEDULE, to delete Paragraphs A, B, and C, and substitute the following Paragraph and subparagraphs, and Paragraph D:

The Design-Builder shall perform, complete, and advance all Work under this Contract in accordance with the schedule set out:

Interim & Final Work Completion:

a. Milestone 1: Development Special Use Permit (DSUP) submittal to city of Alexandria. **NTP+30 cds**

b. Milestone 2: DSUP approval by city of Alexandria. **NTP+210 cds**

c. Milestone 3: **Construction Access and Trailers:** Complete required demolition of Old Town Greens Park and construction access preparation including construction fencing and gates, erection of Design Builder and WMATA Construction Trailers (Field Office) and parking lot, construction access pedestrian bridge, and all temporary utilities that will be required for the Construction Trailers and construction access throughout the duration of the contract. **NTP+450 cds**

d. Milestone 4: **Approvals and Permits:** Complete design and permitting required to obtain City of Alexandria Site Plan approvals and associated permits, including the issuance of Certificate of Appropriateness and Building Permits - Complete all jurisdictional approval processes including but not limited to the receipt of Final Site Plan Approval from the City of Alexandria, and Board of Architectural Review approvals, as well as all appropriate approvals and permits from the City of Alexandria, National Park Service, and the Corp of Engineers required to construct the Potomac Yard Metrorail Station. **NTP+ 575 cds**

e. Milestone 5: **Complete IT Rooms and Systems Facilities:**– Complete construction of all required communications and IT rooms. The rooms shall be complete and securable, with HVAC, plywood backboard installation on walls, and static resistant flooring, fiber and copper backbone installation and testing and make ready for WMATA installation of IT equipment. All wiring, cables and/or fiber optic lines and appurtenances shall be installed, tested, and commissioned, **NTP+ 1150 cds**

f. Note: WMATA IT Complete Communications, and IT Room Equipment Installation **NTP Milestone 5 + 60 cds**

g. Milestone 6: **Complete Station Structure and Track Work**: Completion of the Station Structure, mezzanines, platforms, and roofs, track work, Automatic Train Control, and Traction Power required for abandonment of existing tracks. Complete initial Safety Certification items. Completion of the AC Room building and equipment, Tie Breaker, Train Control rooms and equipment. Commencement of train service through the Station for the remaining duration of contract. Decommission existing tracks and systems as required to commence construction of the Pedestrian bridges. **NTP+ 1270 cds**

h. Milestone 7: **Final Station Completion-** Complete Station, Pedestrian Bridges, Entry Pavilions, and all ancillary facilities and equipment, and Potomac Yard Park. Conduct final Inspection, complete remaining Safety Certification Items. Complete all building systems and equipment commissioning , testing (Pre-functional & Functional Tests) and systems integration, as well as LEED Commissioning. Complete all required O&M training including videotaping and documentation. Complete submission of all deliverables including final as-builts, warranty documents, lien releases, spare parts etc., Facility ready for WMATA Revenue Service. **NTP+ 1450 cds**.

i. Milestone 8: **Site Restoration:** Remove all contractor's temporary facilities. Complete the design, permitting and all work necessary for the restoration of the Wetland and Potomac Greens Park. **NTP+ 1510 cds**

(1) The Design-Builder is responsible for the restoration of temporarily impacted wetland areas and other natural areas which are disturbed during construction. The Design Builder shall restore landscape elements and construct wetlands in accordance with the requirements from applicable sections of National Park Service Record of Decision (NPS ROD).

See Section 00 77 09, LIQUIDATED DAMAGES, for Liquidated Damages associated with the Milestone(s) listed above.

The Authority may modify the Contract, pursuant to Section 00 74 08, CHANGES, to extend the project schedule as often and in time periods as deemed necessary until completion of the Work under this Contract.

Early Completion: If the Design-Builder submits, in accordance with Section 01 33 00, SUBMITTAL PROCEDURES, a schedule or expresses an intention to complete the Work earlier than any required Milestone, interim or final completion date, the Authority shall not be liable for any costs incurred because of delay or hindrance should the Design-Builder be unable to complete the Work before such Milestone, interim or Final Completion date. The duties, obligations, and warranties of the Authority to the Design-Builder shall be consistent with and applicable only to the completion of the Work and completion dates set forth in this Contract.

Project Schedule: The Project Schedule for this contract shall remain in effect, along with all legal rights and responsibilities enumerated in this contract, until all work has been substantially completed and accepted. Any work completion dates or durations specifically enumerated in this contract are for the purpose of establishing a project schedule, determining critical path activities, and assessing liquidated damages.

00 83 00 DISPUTES RESOLUTION BOARD (DRB) – **NOT USED FOR THIS CONTRACT**

00 83 03 AUTHORITY-FURNISHED PROPERTY

Modify Section 00 73 03, AUTHORITY-FURNISHED PROPERTY, to delete Paragraphs A through D and substitute the following Paragraph:

A. The Authority will not furnish property, real or otherwise, through the terms of this Contract. The Design-Builder is required to purchase or lease any property needed for, but not limited to, lay down, storage, or employee parking in its obligations to comply with the Project requirements.

00 84 01 CONSIDERATION AND BASIS OF PAYMENT

Modify Section 00 74 01, CONSIDERATION AND BASIS OF PAYMENT, in its entirety, and substitute the following:

A. In consideration of its undertaking under this Contract, the Design-Builder will be paid the sums set forth in this Contract, which shall constitute complete payment for all work and services required to be performed under this Contract and for all expenditures, which may be made and expenses incurred. The basis of payment will be the Contract Price, as shown on Section 00 51 00, DESIGN-BUILD CONTRACT FORM, and which shall constitute complete compensation for performance of all work required by the Contract.

B. Standby cost for delayed or cancelled Site access: In the event the Design-Builder is delayed in the performance of the Work due to Authority delayed or cancelled Site access, the following basis of payment shall apply:

1. The “Hours of Work” is the period during which the Design-Builder has use of the work area. The “Hours of Work” will exclude the periods required by the Authority to safely secure the work area before the start of the “Hours of Work” and to restore the work area to an operational state after completion of the “Hours of Work”.

2. Delay will be measured relative to “Hours of Work” only. The “Hours of Work” shall be determined based upon weekly coordination between the Contracting Officer Representative (COR) and the Design-Builder.

3. Delays caused by actions of the Authority may occur at the start of the “Hours of Work”, during the “Hours of Work”, or at the end of the “Hours of Work.”

   a. A delay at the start of the “Hours of Work” occurs when the Authority does not grant access to the work area by the scheduled start time. A delay at the start of the “Hours of Work” will be measured from the scheduled start of the “Hours of Work” until the time the Design-Builder is granted access to the work area.

   b. A delay during the “Hours of Work” occurs when the Authority requests the Design-Builder to vacate the work area and the Design-Builder is later allowed to return to the work area. A delay during the “Hours of Work” will begin when the Design-Builder is directed to stop work to vacate the work area and will end when the Design-Builder returns to the work area and resumes work.

   c. A delay at the end of the “Hours of Work” occurs when the Authority requests the Design-Builder to vacate the work area early. A delay at the end of the “Hours of Work” will be measured from the time the Design-Builder is directed to vacate the work area until the scheduled end of the “Hours of Work”.

4. The Design-Builder will be compensated for the direct labor costs incurred for the aggregate of delays that exceed 30 minutes relative to the “Hours of Work”. For payment purposes, delays will be rounded to the nearest 30 minutes provided the Design-Builder remains mobilized until granted access or until the Design-Builder elects to cancel the work, or the Contracting Officer Representative cancels access for the period. However if the Design-Builder elects to cancel work due to a lack of time remaining in the “Hours of Work” period to complete the planned work element, as verified by the Period of Delay form, the Design Builder will be compensated for the aggregate of delays that exceed 30 minutes rounded to the nearest 30 minutes from the time access was cancelled to the scheduled end of the “Hours of Work” period.

5. When access to the work area is cancelled by the Contracting Officer Representative with less notice than noted below, the Authority will pay standby cost of not more than the scheduled “Hours of Work” period or 4 hours, whichever is less. However, if Design-Builder is able to reassign the work crew to other work, regardless of the time of the notice given by the Contracting Officer Representative, no payment will be made.

   a. Weeknights: Five hours before the planned start time of the scheduled “Hours of Work.”

   b. Weekends: Twenty-four hours before the planned start time of the scheduled “Hours of Work.”

6. No payment will be made in those cases where:

   a. A delay at the start of the “Hours of Work” is less than 1 hour and the Authority grants access but the Design-Builder elects to cancel work, except that payment for delay cost will be made in accordance with Paragraph B.4 above if the scheduled “Hours of Work” period is 3 hours or less.

b. A delay at the start of the "Hours of Work" is less than 1 hour and the Authority grants access and the Design-Builder proceeds working and then elects to cease working and leaves the worksite prior to the scheduled end of the "Hours of Work".

7. Prior to the completion of each shift, the Design-Builder and the Contracting Officer Representative or designee shall sign a Period of Delay form, which shall document the work start and completion times, the duration of the delay, the reason for the delay, the reason for the Design-Builder leaving the Site prior to the scheduled end of the "Hours of Work" period, and the names of the crew members present, including foremen, but excluding salaried supervision. The Design-Builder shall not be entitled to compensation for equipment, overhead, profit or extended overhead costs under this Section; however, this Section does not prohibit the Design-Builder from seeking an equitable adjustment for equipment costs under other sections of the Contract and access delays may provide a basis to grant a non-compensable extension to the Contract Performance Time. Certified payrolls shall establish the hourly rates of the crewmembers. All requests for payment for delay costs shall be submitted to the Contracting Officer Representative with the next progress payment or within 30 Days, whichever is longer. The Design-Builder waives any right to delay costs where the delays are not documented prior to the completion of the shift and the request for payment is not submitted to the Contracting Officer Representative with the next progress payment or within 30 Days, whichever is longer.

8. If the Design-Builder is not ready to start work at the start of the "Hours of Work" or does not return the work area to the Authority on time at the end of the "Hours of Work," the Design-Builder shall compensate the Authority for the Authority staff and other Authority direct costs for supporting the non-revenue or Revenue Service Adjustment event.

Notification of Cancellation	Occurrence	Requirement	Terms of Payment
Week Night	COR cancels full shift	The COR notifies Design-Builder 5 hours or more before the planned start	No delay payment due
Week Night	COR cancels full shift	The COR notifies Design-Builder less than 5 hours before the planned start	Pay 4 hours[1]
Weekend Single Track/Shutdown	COR cancels full shift or the full weekend of work	The COR notifies Design-Builder 24 hours or more before the planned start	No delay payment due
Weekend Single Track/Shutdown	COR cancels full shift or the full weekend of work	The COR notifies Design-Builder less than 24 hours before the planned start	Pay 4 hours[1]

[1]No payment will be made if the Design-Builder is able to reassign the work crew to other work.

Hours of Work	Actual Hours Worked	Design-Builder	Terms of Payment
Weeknight Early Out Hours of Work: 2200 to 0400 (Weeknight Nonrevenue Similar)	Delayed Start 2215 to 0400 Delay less than 30 minutes	Design-Builder is on Site ready to work Works until the end of the Hours of Work	No delay payment due. (Same for a mid shift or end delay less than 30 minutes)
Weeknight Early Out Hours of Work: 2200 to 0400 (Weeknight Nonrevenue Similar)	Delayed Start 2235 to 0400 Delay 35 minutes	Design-Builder is on Site ready to work Works until the end of the Hours of Work	Pay 30 minutes delay (Same for a mid shift or end delay)

Hours of Work	Actual Hours Worked	Design-Builder	Terms of Payment
Weeknight Early Out Hours of Work: 2200 to 0400 (Weeknight Nonrevenue Similar)	Delayed Start 2235 to 0430 Delay 35 minutes	Design-Builder is on Site ready to work Able to work beyond the end of the Hours of Work	Pay 30 minutes delay (Same for a mid shift delay)
Hours of Work	Actual Hours Worked	Design-Builder	Terms of Payment
Weeknight Early Out Hours of Work: 2200 to 0400 (Weeknight Nonrevenue Similar)	Start Delayed 35 minutes to 2235	Design-Builder is on Site ready to work Design-Builder elects not to go to work	Under 1 hour delay; no Payment due
Weeknight Non-Revenue Hours of Work: 0100 to 0400 (Weeknight Nonrevenue Similar)	Start Delayed 35 minutes to 0135	Design-Builder is on Site ready to work Design-Builder elects not to go to work since remaining time does not allow completion of work element	Pay 2 hours and 30 minutes delay
Weeknight Early Out Hours of Work: 2200 to 0400 (Weeknight Nonrevenue Similar)	Start Delayed 65 minutes to 2305	Design-Builder is on Site ready to work Design-Builder elects not to go to work	Over 1 hour delay; pay 5 hours and 30 minutes delay
Weeknight Early Out Hours of Work: 2200 to 0400 (Weeknight Nonrevenue Similar)	Start delay / End delay 2225 to 0345 Start delay 25 minutes End delay 15 minutes Total delay 40 minutes	Design-Builder is on Site ready to work Works during time permitted	Pay 30 minutes delay
Weeknight Early Out Hours of Work: 2200 to 0400 (Weeknight Nonrevenue Similar)	Delay during “Hours of Work” 2330 to 0035 Start delay 0 minutes End delay 0 minutes Total delay 65 minutes	Design-Builder is on Site ready to work Works during time permitted	Over 1 hour delay; pay 60 minutes delay
Weekend Hours of Work: Fri 2200 to Mon 0400	Delay during “Hours of Work” Sat 0200 to Mon 0300 Start delay 4.25 hours End delay 1.25 hours Total delay 5.5 hours	Design-Builder is on Site ready to work Works during time permitted	Pay 5 hours and 30 minutes delay
Weeknight Early Out Hours of Work: 2200 to 0400	Start delayed to 0200 hours then COR cancels access	Design-Builder is on site ready to work	Pay 5 hours and 30 minutes delay
Weeknight Nonrevenue Hours of Work: 0100 to 0400	Start delayed to 0245, then COR cancels access	Design-Builder is on Site ready to work	Pay 2 hours and 30 minutes delay
Weekend Hours of Work: Friday 2200 to Monday 0400	Delay Friday 2200 to Saturday 0630. First shift cancelled at 0230. Work begins at 0630.	Design-Builder 1st shift is on Site ready to work until shift cancelled at 0230	Pay 8 hours delay

00 84 04 METHOD OF PAYMENT

Modify Section 00 74 04, METHOD OF PAYMENT, to add Paragraphs M and N:

M. As a condition of Final Payment, in addition to the retainage specified in this Section, $250,000 will be withheld until approved As-built Project Schedule is delivered to the Contracting Officer Representative and is determined to be complete and accurate.

N. As a condition of Final Payment, in addition to the retainage specified in this Section, $50,000 will be withheld until Operation and Maintenance Training is complete and accepted.

00 86 05 DISADVANTAGED BUSINESS ENTERPRISE

Modify Section 00 76 05, DISADVANTAGED BUSINESS ENTERPRISE, to delete Paragraph B and substitute the following:

B. The goal of DBE participation established for this Contract is 18% percent of the Contract Price.

00 86 07 LABOR PROVISIONS - DAVIS-BACON AND COPELAND ANTI-KICKBACK ACTS

Modify Section 00 76 07, LABOR PROVISIONS, to add Appendix D, Wage Determination Rates.

00 87 08 INDEMNIFICATION AND INSURANCE REQUIREMENTS

Modify Section 00 77 08, INDEMNIFICATION AND INSURANCE REQUIREMENTS, to modify Article C. to the following:

C. General Insurance Requirements

1. Contractor shall procure, at its sole cost and expense the insurance outlined in this Section as follows:

   a. Contractor is required to maintain the insurance coverage(s) outlined in this Section for a period of time commencing the sooner of the execution of this contract, or the start of Work, without interruption. The coverages shall be maintained in force and effect for 3 years after final completion and acceptance of the Work, with the exception of Professional Liability.

   b. The insurance coverage and limits of insurance outlined in this contract are minimum coverage and limits. Contractor is encouraged, at its sole cost and expense, to purchase any additional insurance coverages and or limits of insurance that Contractor deems prudent and necessary to manage risk in the completion of this contract.

   c. Upon written request from WMATA, contractor shall provide copies of any and all policy(s), including all endorsement(s), within 5 business days of such request.

   d. Insurance companies must have a minimum A. M. Best rating of A- VIII.

   e. Unless otherwise noted, “Claims Made” insurance policies are not acceptable.

   f. Any insurance policy utilizing a Self-Insured Retention (SIR) requires approval from WMATA.

2. Workers’ Compensation and Employer’s Liability

   Required Minimum Limits of Coverage - See Division 00 87 07 for Minimum Limits of Coverage

   Required Minimum Coverage(s):

   a. Workers’ Compensation Statutory Coverage must be provided on an “All States” basis.

b. Contractor and Sub-Contractors of any tier performing work within 500 feet of navigable water must have their Workers' Compensation Policy endorsed to provide coverage for both Jones Act Liability and Longshore and Harbor Workers' Compensation Act Liability.

3. Commercial General Liability

Required Minimum Limits of Coverage - See Division 00 87 07 for Minimum Limits of Coverage

Required Minimum Coverage(s):

a. Commercial General Liability (CGL) coverage form shall be ISO Occurrence Form CG0001 (12/04) or its equivalent. Equivalency determination shall be made in WMATA's sole and unreviewable discretion.

b. Required minimum limits of coverage may be achieved through a combination of the aforementioned CGL coverage form and umbrella excess liability coverage form(s), provided that the umbrella excess liability coverage form(s) provide the same or broader coverage than the prescribed CGL coverage form.

c. Policy shall be endorsed with Additional Insured Endorsement(s) in compliance with Section I below. Commercial General Liability and Umbrella Excess Liability forms must provide defense coverage for additional insureds.

d. Policy shall be endorsed with a Waiver of Subrogation Endorsement(s) in compliance with Section J below.

e. The definition of "Insured Contract" shall be modified to provide coverage for contractual liability for contracts for construction or demolition operations that are within 50 feet of a railroad, and sidetrack agreements.

f. Defense Costs (Allocated Loss Adjustment Expense) must be included and in excess of the policy limits for all primary and Umbrella Excess Policies.

g. Policy shall be endorsed with ISO endorsement CG 25 03 03 97; "Designated Construction Project(s) General Aggregate Limit", and designate "Any and all construction projects" as the designated Construction project.

h. Policy shall be endorsed with ISO endorsement CG 25 04 03 97; "Designated Location General Aggregate Limit", and designate "Any and all locations" as the designated location.

i. The Additional Insured Endorsement shall include Products and Completed Operations Coverage with no limitation on when claims can be made. The coverage provided by the additional insured endorsement shall be at least as broad as the Insurance Service Office, Inc.'s Additional Insured Form CG 20 10 11 85 or CG 20 26 11 85 as determined by WMATA.

4. Railroad Protective Liability Insurance (RRP)

For work within 50 feet of WMATA railroad tracks or work within WMATA rail stations, Railroad Protective Liability Insurance is required with the following minimum limits of coverage:

Required Minimum Limits of Coverage - See Division 00 87 07 for Minimum Limits of Coverage

Required Minimum Coverage(s):

a. Railroad Protective Liability (RRP) policy on a policy form that is acceptable to WMATA, issued by an insurance company that is acceptable to WMATA.

b. WMATA shall be the Named Insured.

c. Cost of RRP shall be the sole responsibility of Contractor.

d. The "Wet Ink" original RRP policy shall be sent to WMATA at following address:
Washington Metropolitan Area Transit Authority
Office of Insurance, Room 8F
600 Fifth Street, NW
Washington, DC 20001.

5. WMATA Blanket RRP Program Option

WMATA may offer to waive the requirement for the Contractor to procure RRP if 1) the work qualifies for coverage under WMATA's blanket RRP program, and 2) the Contractor prepays the RRP waiver fee which shall be determined by the rate schedule promulgated by the insurer in effect as of the effective date of this Contract. Contractor shall be advised of, and pay the applicable waiver fee, or procure a standalone RRP policy on WMATA's behalf if Contractor decides against the WMATA Blanket RRP Program option.

6. Business Auto Liability

Required Minimum Limits of Coverage - See Division 00 87 07 for Minimum Limits of Coverage

Required Minimum Coverage(s):

a. Business Auto Liability shall be written on ISO Business Auto Coverage Form CA 00 01 03 06, or its equivalent. Equivalency determination shall be made in WMATA's sole and unreviewable discretion.

b. Policy shall be endorsed with Additional Insured Endorsement(s) in compliance with Section I below.

c. Policy shall be endorsed with a Waiver of Subrogation Endorsement(s) in compliance with Section J below.

d. Business Auto Liability minimum Combined Single Limit requirements may be obtained through the combination of a Primary Business Auto Liability policy and an Umbrella Excess Liability policy provided that the Umbrella Excess Liability policy complies with items a. through c. above.

e. MCS-90 Endorsement for work involving the transportation or disposal of any hazardous material or waste off of the jobsite. If the MCS-90 Endorsement is required, minimum auto liability limits of $5,000,000 per occurrence are also required.

f. Non-Owned Disposal Site (NODS) Endorsement providing coverage for the Contractor's legal liability arising out of pollution conditions at the designated non-owned disposal site.

7. Professional Liability Insurance

Required Minimum Limits of Coverage - See Division 00 87 07 for Minimum Limits of Coverage

Should Contractor, any Sub-Contractor of any tier or any supplier, be required by this contract to provide design services or the services of a professional engineer, including, but not limited to stamping, sealing, or certifying blueprints or other construction-related documents, Contractor, Sub-Contractors of every tier and suppliers are required to maintain Professional Liability Insurance as follows:

a. Actual coverage or tail coverage must be purchased and maintained for a period of time equal to the statute of repose.

b. Coverage can be written on an "Occurrence" or "Claims Made" Basis.

c. Coverage can be written on 'Non-Admitted" paper.

8. Pollution Liability Insurance

Required Minimum Limits of Coverage - See Division 00 87 07 for Minimum Limits of Coverage

Should Contractor, any Sub-Contractor, of any tier, or any supplier, be required by this contract to perform demolition of any pre-existing structures, moving, removal, or handling of any hazardous materials, Contractor is required to maintain Pollution Liability Coverage as follows:

a. Coverage can be written on an “Occurrence” or “Claims Made” Basis.

b. Coverage can be written on ‘Non-Admitted” paper.

c. Policy shall be endorsed with Additional Insured Endorsement(s) in compliance with Section I below.

d. Policy shall be endorsed with a Waiver of Subrogation Endorsement(s) in compliance with Section J below.

9. Builders’ Risk

Required Minimum Limits of Coverage - See Division 00 87 07 for Minimum Limits of Coverage

Contractor shall purchase and maintain at its cost a builders “all risk” insurance policy for the project covering work at the at the project site. Contractors of every tier will be insured under this policy, but only to the extent that the policy’s coverages and exclusions allow. Cost associated with any changes will not be recognized as a change order.

10. Additional Insured(s)

Contractor is required to add WMATA, its independent contractors, and the WMATA Board of Directors as additional insured(s) on all insurance policies purchased by Contractor, with the exception of Workers’ Compensation and Professional Liability.

a. Coverage provided to any Additional Insured shall be primary and non-contributory to any other insurance available to the Additional Insured.

b. Coverage provided to any Additional Insured shall be for claims arising out of both ongoing operations and products and completed operations hazard.

c. Coverage available to any Additional Insured under the products and completed operations hazard can only be limited to the applicable statute of repose in the jurisdiction where the contract scope of work takes place.

d. Coverage available to the additional insureds is not limited to the minimum limits of coverage outlined in this document.

11. Waiver of Subrogation

Contractor and Sub-Contractors of every tier are required to have all insurance policies purchased by Contractor and Sub-Contractors of every tier, endorsed to waive the insurance company’s rights of recovery against WMATA, its independent contractors and the WMATA Board of Directors.

a. Coverage shall be provided on an endorsement that is acceptable to WMATA.

12. Certificate of Insurance (COI)

Contractor shall provide WMATA an ACORD Certificate of Insurance (COI) as evidence that the insurance requirements of this Section have been satisfied. Certificates of Insurance shall be emailed to COI@WMATA.COM.

The certificate holder box should read:

Washington Metropolitan Area Transit Authority
Office of Insurance, Room 8F
600 Fifth Street, NW
Washington, DC 20001

Additionally;

a. Satisfactory COI delineating all required insurance coverage requirements under this Section shall be delivered before the execution of this Contract by WMATA.

b. COI shall state the RFP# and the name of your WMATA Procurement contact.

c. Failure to provide satisfactory evidence of all required insurance may result in Contractor and/or subcontractors of every tier being denied access to work locations, including, but not limited to WMATA properties.

d. COI reflect total limits of insurance purchased by Contractor for the types of insurance required under this Contract.

e. Proposed material modifications to insurance required under this Section must be received by WMATA at least 30 days prior to the effective date of the proposed modifications to such insurance.

f. WMATA's receipt of copies of any COI, policy endorsements or policies does not relieve Contractor of the obligation to remain in compliance with the requirements of this Section at all times. Contractor's failure to so comply, and to continuously comply with these insurance requirements shall constitute a material breach of this Contract.

g. The COI shall specifically delineate the following:

   1) Who is an Additional Insured under the policies delineated in this Section.

   2) That each additional insured(s) as required under this Section is an additional insured on a primary and non-contributory basis.

   3) That each additional insured(s) is an additional insured for ongoing operations of the Contractor in addition to the products and completed operations coverage.

   4) That coverage providing a waiver of subrogation to each Additional Insured is compliant with the Waiver of Subrogation article of this Section.

   5) That the issuing insurance company will mail written notice of cancellation of any of the required insurance policies to WMATA within 30 days of Cancellation. Use of "will endeavor to" as respects this requirement is not acceptable and must be deleted. Such notice shall be sent to:

      Washington Metropolitan Area Transit Authority
      Office of Insurance, Room 8F
      600 Fifth Street, NW
      Washington, DC 20001

h. The City of Alexandria is receiving project funding from the Northern Virginia Transportation Authority (NVTA). As part of the funding reimbursement process, NVTA requires a Certificate of Insurance (COI) from the contractor that lists NVTA and the City of Alexandria as being named as additional insured for the project. This is a condition and requirement before reimbursements can be distributed.

00 87 08 – Minimum Insurance Limits of Coverage and additional Insurance Requirements.

1. Minimum Insurance Limits of Coverage - Contractor

a. The limits of coverage outlined in this Division are minimum limits. Contractor is encouraged, at its sole cost and expense, to purchase any additional insurance coverages and or limits of insurance that Contractor deems prudent and necessary to manage risk in the completion of this contract. Liability of the contractor under this contract is not limited to the minimum limits of coverage nor the actual limits of coverage purchased by contractor.

2. Workers' Compensation and Employers' Liability

Workers' Compensation	Statutory	
Employers' Liability	$1,000,000	Each Accident
	$1,000,000	Disease Policy Limit
	$1,000,000	Disease Each Employee

3. Commercial General Liability

$50,000,000	Each Occurrence Limit
$50,000,000	General Aggregate Limit
$50,000,000	Products and Completed Operations Limit

4. Railroad Protective Liability

$5,000,000	Each Occurrence Limit
$10,000,000	Aggregate Limit

5. Business Auto Liability

$2,000,000	Per Occurrence Combined Single Limit

6. Professional Liability Insurance

$5,000,000	Each Claim and in the Aggregate

7. Pollution Liability Insurance

$10,000,000	Each Claim and in the Aggregate

8. Builder's Risk Insurance

Limits equal to the value of the project	Each Occurrence

00 87 09 LIQUIDATED DAMAGES

Modify Section 00 77 09, LIQUIDATED DAMAGES, to delete Paragraph A. and substitute the following Paragraph and subparagraphs:

A. The Design-Builder understands that if it fails to complete portions of or all of the Work as described in Supplementary Conditions Section 00 82 04, PROJECT SCHEDULE, the Authority will suffer damages, which have been estimated and are as specified below:

Milestone 1: Development Special Use Permit (DSUP) submittal to City of Alexandria. $0

Milestone 2: DSUP approval by City of Alexandria. $0

Milestone 3: **Construction Access and Trailers: $375.34 per cds**

Milestone 4: **Approvals and Permits: $635.62 per cds**

Milestone 5: **Complete IT Rooms and Systems Facilities: $2,493.01 per cds**

Note: WMATA IT Complete Communications, and IT Room Equipment Installation **NTP Milestone 5 + 60 cds**

Milestone 6: **Complete Station Structure and Track Work**: **$898.63 per cds**

Milestone 7: **Final Station Completion: $2,772.46 per cds**

B. See Section 00 72 04, PERIOD OF PERFORMANCE AND/OR PROJECT SCHEDULE, for Project Milestone(s).

00 88 09 PARTNERING – NOT USED

Modify Section 00 70 00, GENERAL CONDITIONS, to add the following Section: PARTNERING WILL NOT BE USED FOR THIS CONTRACT

00 89 04 LIVING WAGE

ADD THE FOLLOWING SECTION 00 79 04 LIVING WAGE:

A. This Contract is subject to the Authority's Living Wage Policy and implementing regulations. The Living Wage provision is required in all contracts for services (including construction) awarded in an amount that exceeds $100,000 in a 12-month period.

1. The Authority Living Wage Rate is $13.85 per hour, and may be reduced by the Design-Builder's per-employee cost for health insurance.

2. The Design-Builder shall:

a. Pay, at a minimum, the Authority Living Wage Rate, effective during the time the Work is performed, to all employees who perform Work under this Contract, except as otherwise provided in paragraph (4) below;

b. Include the Living Wage clause in all Subcontracts that exceed $15,000 in a 12-month period awarded under this Contract;

c. Maintain payroll records, in accordance with the retention and examination of records requirements in the General Conditions, and include or cause to be included, the substance of this Section, including this Paragraph c, in its Subcontracts covered by the Living Wage requirement at all tiers; and

d. Submit records with each monthly invoice supporting payment of the Living Wage Rate.

3. The Design-Builder shall not split or subdivide a Contract, pay an employee through a third party, or treat an employee as a Subcontractor or independent contractor to avoid compliance with the Living Wage provisions.

4. Exemptions to the Living Wage provisions include:

   a. Contracts and agreements with higher negotiated wage rates;

   b. Contracts that are subject to higher wage rates required by federal law or collective bargaining agreements (e.g., Davis Bacon);

   c. Contracts or agreements for regulated utilities;

   d. Emergency services to prevent or respond to a disaster or imminent threat to public health and safety; and

   e. Design-Builders who employ fewer than ten employees.

5. The Authority may adjust the Living Wage rate effective in January of each year. The adjustment will reflect the average Living Wage Rate among Metro's Compact Jurisdictions with Living Wage provisions. If after Contract award the Living Wage Rate increases, the Design-Builder is entitled to an equitable adjustment to the rate in the amount of the increase for employees who are affected by the escalated wage.

6. Failure to comply with the Authority's Living Wage provisions shall result in the Authority's right to exercise available Contract remedies, including Contract termination or debarment from future contracts.

00 89 05 COMMUNITY OUTREACH

ADD THE FOLLOWING NEW SECTION: 00 79 05 COMMUNITY OUTREACH

A. The Authority will establish and implement a program of public contact for conducting effective relationships with communities and businesses in proximity to the construction areas. Do not initiate contact with the public without Contracting Officer Representative approval.

B. The Authority will contact those residents and business owners who might reasonably be expected to be affected by the construction and make known to them the name of the Authority's representative on the worksite with responsibility for community outreach and explain to them the means by which the representative can be contacted expeditiously.

C. Design-Builder shall designate an a knowledgeable representative point of contact as needed to provide information about his own work in support of the Authority..

00 89 06 AVAILABILITY OF FUNDS

Modify Section 00 70 00, GENERAL CONDITIONS, to add the following Section:

00 79 06 AVAILABILITY OF FUNDS

A. Funds are not presently available for performance under this Contract beyond the fiscal year which ends June 30, 2018. The Authority's obligation for performance of the Contract beyond that date is contingent upon the availability of funds from which payment for Contract purposes can be made. No legal liability on the part of the Authority for any payment may arise for performance under this Contract until funds are made available to the Contracting Officer for performance and until the Design-Builder receives notice of availability, to be confirmed in writing, by the Contracting Officer. Any option exercised by the Authority which will be performed in whole or in part in a subsequent

fiscal year is subject to availability of funds in the subsequent fiscal year and will be governed by the terms of this Provision.

00 89 07 ACCESS TO RECORDS

Modify Section 00 70 00, GENERAL CONDITIONS, to add the following Section:

00 79 07 ACCESS TO RECORDS

A. Apart from the more limited record access provisions of the Common Grant Rules, 49 U.S.C. Section 5325(g) provides FTA and DOT officials, the U.S. Comptroller General, or any of their representatives, access to and the right to examine and inspect all records, documents, and papers, including contracts, related to any FTA project financed with Federal assistance authorized by 49 U.S.C. Chapter 53.

00 89 08 FEDERAL STANDARDS

Modify Section 00 70 00, GENERAL CONDITIONS, to add the following Section:

00 79 08 FEDERAL STANDARDS

A. The Design-Builder agrees to comply with applicable third party procurement requirements of 49 U.S.C. chapter 53 and Federal laws in effect now or subsequently enacted; with applicable U.S. DOT third party procurement regulations at 49 C.F.R. § 18.36 or 49 C.F.R. §§ 19.40 through 19.48, and with other applicable Federal regulations pertaining to third party procurements and later amendments thereto. The Recipient also agrees to follow the provisions of the most recent edition and revisions of FTA Circular 4220.1F, “Third Party Contracting Guidance,” except to the extent FTA determines otherwise in writing. The Design-Builder agrees that it may not use FTA assistance to support its third party procurements unless its compliance with Federal laws and regulations is satisfactory. Although the FTA “Best Practices Procurement Manual” provides additional third party contracting information, the Recipient understands and agrees that the FTA “Best Practices Procurement Manual” may omit certain Federal requirements applicable to specific third party contracts.

00 89 09 RECYCLED PRODUCTS

Modify Section 00 70 00, GENERAL CONDITIONS, to add the following Section:

00 79 09 RECYCLED PRODUCTS

A. The Resource Conservation and Recovery Act of 1976, 42 U.S.C. Section 6962, requires governmental recipients to provide a competitive preference to products and services that conserve natural resources, protect the environment, and are energy efficient. EPA guidelines, “Comprehensive Procurement Guideline for Products Containing Recovered Materials,” 40 CFR Part 247, direct that third party contracts of $10,000 or more with governmental recipients specify a competitive preference for products containing recycled materials identified in those EPA guidelines. For information about EPA’s recovered materials advisory notices, see EPA’s Web site: http://www.epa.gov/cpg/backgrnd.htm.

APPENDIX:

APPENDIX D – 00 86 07 WAGE DETERMINATION RATES

END OF SECTION

Public restroom facilities shall be included in the paid areas of the stations. The Design-Builder shall provide the minimum number of plumbing fixtures per VUSBC requirements based on the NFPA 130 station occupant load.

4. Pedestrian Bridge: The station pedestrian bridge provides passenger access from the entrance pavilion to the station. Required features include:

- The general configuration (elevation and cross section), finishes, dimensions, and aesthetic elements shown in the Project Requirements and General Plans using materials, finishes, configuration, and dimension;
- CSX minimum clearance requirements of 23'-3" above railway;
- # 12 foot minimum clear walkway between handrails for the North Pedestrian Bridge; #
- Horizontal walking slopes that do not exceed ADA or WMATA requirements;
- Utility chases, CCTV cameras, public address speakers, lighting fixtures and signage maintaining all required minimum clearances and unobstructed views;
- Provision for future maintenance or replacement of bearings supporting the pedestrian bridges;
- Design of the structures, including superstructure, bearings, substructure and foundations, shall be designed in accordance with AASHTO LRFD Bridge Design Specifications;
- Provision for maintenance access to the roof of the bridge;
- Finishes including mesh, glazing and railings;
- Branches at nodes where bridge changes plan direction; and
- Roofing, gutters and downspout, and drainage provisions per WMATA Criteria and the requirements of the City of Alexandria.

5. Entrance Pavilion: The station entrance pavilion provides passenger access from the neighborhood streets and parks to the station. The pavilion includes two escalators, two elevators, a single stair, a bike station, and ancillary spaces. Required features include:

- General configuration and aesthetic elements shown in the Project Requirements and General Plans using materials, finishes, configuration, and dimensions;
- Adaptation to the site-specific conditions and grades and coordination of final grades with adjacent development;
- A canopy/roof design that conforms to the Project Requirements and General Plans and incorporates internal roof gutters and downspout drainage system that discharges to grade or a closed system per the Design-Builder's required approval for drainage design and subsequent approval by the City of Alexandria;
- A roof/ceiling design that incorporates all required CCTV cameras, public address speakers, lighting fixtures, and signage, while maintaining all required minimum clearances and unobstructed views;
- All necessary utility connections including water, sanitary sewer, electric and systemwide communications; and
- Emergency phone at the lower elevator landing.

6. DELETED

7. DELETED

8. Tree Conservation and Protection Program (TCPP): A TCPP will be developed per the City of Alexandria Landscape Guidelines and to the satisfaction of the Directors of P&Z and RPCA and the National Park Service (NPS). All proposed tree protection details shall be depicted on the final site plan and early site preparation permit plans. Such tree protection measures shall be installed prior to any site or utility work and be maintained throughout the construction period. The tree preservation measures shall be inspected by the City Arborist prior to any construction, demolition, grading or utility work for the site.

9. DELETED

10. Site Lighting: All Site Lighting shall be in accordance with the City of Alexandria standards. The lighting plan and lighting details will be consistent with the approved Potomac Yard Urban Design Guidelines that allow minimum light leakage, particularly around the perimeter of the site in order to minimize the obtrusion to the George Washington Memorial Parkway.

In addition, the Design-Builder shall provide all Site work including site clearing, site and wetland restoration, site and wetland mitigation, site utilities, construction access roads required during construction, landscaping, graphics and signage required for the complete project.

11. Old Town Greens Tennis Courts and Playground: The Project will require the use of the property known as the Old Town Greens Neighborhood Association Tennis Courts and Playground for construction related access. The Design Builder will be required to demolish two tennis courts and a playground.

Tennis Courts: The complete removal of tennis court pavement, fencing, walls, and any other appurtenance related to the tennis courts such as lighting, seating, site furniture, and nets shall be required.

Playground: The Design Builder is responsible for providing a replacement playground for the residents of Old Town Greens. The existing playground equipment, seating, site furniture, and trash receptacles, shall be removed and new playground equipment, seating, site furniture, and trash receptacles, shall be supplied and installed by the Design Builder, to an area within Old Town Greens Neighborhood Association. The Design Builder shall provide new playground equipment equal in size, quantity and quality, to the temporary playground. The

Washington Memorial Parkway (GWMP) or Potomac Greens Drive north of the intersection of Carpenter Road.

B. Construction equipment and materials will not be staged within Authority Right-of Way.

1. Construction operations will be required to be staged as shown in the RFP Documents..

2. Staging shall be prohibited on any public Right of Way including but not limited to, Route 1, Slaters Lane, Massey Lane, Potomac Greens Drive and Carpenter Road.

3. WMATA will not provide contractor or contractor employees parking.

4. Design-Builder parking is prohibited on city streets in and around the project site.

C. Constraints on Construction

1. Work Sequence NOT USED

2. Special Events

a. Minimize risks to the public during special community events that are located in close proximity to the Project Site. Construction activities shall be coordinated with the event and the Authority when working to reduce construction impacts during events.

b. Maintain a Special Community Event List in coordination with the Authority for the duration of the Contract. The list shall identify local special holidays, parades, festivals, and other similar events that are within the proximity of the Project construction area and operations. The list shall include the following information:

(1) Name and general description of the event

(2) Date, time of day, and duration

(3) Location(s)

D. Work performed by Others: NOT USED

E. Coordination of Work with Others: Coordinate Work through the Contracting Officer Representative with the following:

1. Utilities and jurisdictional authorities affected by or having jurisdiction over the Project.

A. Dominion Virginia Power - upgrade of equipment at the existing switching station on E. Abingdon Drive in Alexandria, and connect it to the Glebe Substation on S. Glebe Road in Arlington. Additional information may be viewed at the City of Alexandria website https://www.alexandriava.gov/dvp/

B. North Potomac Yard Development - The North Entry pavilion will be located on property conveyed to WMATA by the Developer of the North Potomac Yard (Developer), as set forth in Section 32 05 10 SITING OF NORTH PAVILION AND ENTRANCE BRIDGE, and in coordination with the City of Alexandria. The Design Builder is required to coordinate construction activities, utility connections, construction laydown areas, and access, in the area of the North Potomac Yard development and the North Entry Pavilion with the Developer and the City of Alexandria. # #

2. Other Contracting Officer Representatives, Authority consultants, and contractors associated with adjacent projects or properties.

F. Survey Work: Perform as needed to execute the Project as specified in Section 01 72 10, LAYOUT OF WORK AND FIELD ENGINEERING.

SECTION 14200

HYDRAULIC ELEVATORS

PART 1 – GENERAL

1.01 DESCRIPTION

A. This section specifies work pertaining to heavy-duty hydraulic passenger elevator systems including elevator cars, hoistway equipment, hydraulic piping, valves, cylinders, machinery, control systems, indicators, signs, elevator pit ladders and finish work in the vicinity of the hoistway doors. Work under this section also includes drilling of casing holes, furnishing and installation of 3/8-inch thick steel well hole casings, and concrete in the bottom of the well hole.

B. The following sections include related requirements and are performed by other trades:

1. Specifications Section 02000 – Site Construction
2. Specifications Section 05000 – Metal Fabrication
3. Specifications Section 08800 – Glass and Glazing
4. Specifications Section 09920 – Painting
5. Division 7 Section “Waterproofing” for water proofing of elevator pit
6. Division 15 Sections for heating, ventilating and/or air conditioning of elevator machine room.
7. Division 16 Sections for electrical service to elevator equipment, fire alarm systems and communications systems.

C. Definitions:

All terms in this specification have the meaning as defined in the ASME code.

1. Heavy duty elevator: An elevator designed specifically for the harsh environment and duty load cycles common to transportation system usage.
2. Elevator - a hoisting and lowering mechanism, equipped with a car or platform, which moves in guide rails or racks and serves two or more landings
3. Elevator, passenger - an elevator used primarily to carry persons other than the operator and persons necessary for loading and unloading.
4. Elevator, hydraulic - a power elevator in which the energy applied, by means of a liquid under pressure, in a hydraulic jack.
5. Contractor: The General Contractor.
6. Installer: The responsible party who installs the elevator.
7. OEM: Original Equipment Manufacturer.

8. Dwell time: The period of time the elevator is at a landing while the doors open, passengers transfer and doors close.
9. Substantial completion: The point at which the elevator is ready for use, whether the site is finished or not. This is where the jurisdictional inspection usually takes place.
10. Final Acceptance: The point at which the owner accepts the elevator project as being complete including all submittal requirements. This may be a different point in time than substantial completion.
11. Interim Maintenance: Maintenance from the point of substantial completion, but prior to Revenue Service.
12. Beneficial Use: When the elevator is placed into service, may be prior to the site being ready for public use.
13. Revenue Service: The station or facility opening date.
14. Notice to Proceed (NTP): within this document shall mean the date which the elevator installer is notified to proceed with the project.
15. Override Switch – A switch located in a kiosk panel, which disables the Hall Call Buttons.
16. MSDS - Material Safety Data Sheet.
17. BOM - Bill of Material
18. SMNT - Systems Maintenance (WMATA)
19. WMATA: Washington Metropolitan Area Transit Authority.

1.02 REFERENCES AND QUALITY ASSURANCE

H. Codes, Regulations, Reference Standards and Specifications.

1. Comply with codes and regulations of the Authority Having Jurisdiction.
2. American Society of Mechanical Engineers (ASME) A17.1 Safety Code for Elevators & Escalators and A17.2 Guide for Inspection of Elevators, Escalators and Moving Walks.
3. WMATA Design Criteria requirements indicated in Section VI-Mechanical.
4. American Institute of Steel Construction (AISC).
5. American Iron and Steel Institute (AISI).
6. American National Standards Institute (ANSI): C80.1
7. American Society for Testing and Materials (ASTM): A36, A123, A153, A167, A240, A264, A276, A500, A653, B3, B8, D471.
8. American Wire Gauge (AWG).
9. Americans with Disabilities Act Accessibility Guidelines for Buildings and Facilities (ADAAG).

10. American Welding Society (AWS): D1.1.
11. Environmental Protection Agency (EPA).
12. Federal Transit Administration (FTA).
13. Institute of Electrical and Electronic Engineers (IEEE): 1202.
14. International Code Council (ICC) – International Building Code (IBC).
15. National Association of Architectural Metal Manufacturers. (NAAMM): C54, C55.
16. National Institute of Standards and Technology (NIST).
17. National Electrical Code (NEC).
18. National Electrical Manufacturers' Association (NEMA): WC 70, KS 1, AB 1, 250, PB 1, MG 1.
19. National Electrical Safety Code (NESC)
20. National Elevator Industry, Inc. (NEII)
21. National Fire Protection Association (NFPA): NFPA-130-2003.
22. Occupational Safety and Health Act (OSHA).
23. Society of the Plastics Industry (SPI).
24. Underwriters' Laboratories, Inc. (UL), UL-94HB, 6, 50, 62, 98, 360, 486, 489, 514, 1591.
25. United States Department of Transportation (DOT).
26. Any additional requirements imposed by local agencies and/or codes having jurisdiction shall be incorporated into elevator installation.
27. In the event of a conflict between codes, regulations, these specifications or standards, the most stringent requirement as determined by the Contractor and approved by the Authority shall take precedence unless specifically addressed herein.

B. Elevator Manufacturer and/or Installer’s Qualification:

1. Manufacturer Qualification: : Shall provide documents stating that their firm has successfully produced elevators for transit system applications for a minimum of ten (10) years and regularly engaged for the past five (5) years in the manufacture of major components for hydraulic passenger elevators. As a standard of quality the elevator equipment design and installation shall comply with the Code.
2. Installer’s Qualifications: Shall be the original manufacturer of elevator equipment or manufacturer's authorized agent who is trained and approved for installation of units required for this Project.
3. The Contractor shall obtain and pay for all permits and licenses and perform all required inspections.

C. Quality Assurance:

1. The elevator contractor shall guarantee the materials and workmanship of the apparatus furnished under these specifications and will correct any defects not due to ordinary wear and tear within two (2) years from date of completion of each elevator, inclusive of labor and traveling expenses. Defective work shall be repaired or replaced at no additional cost to the Authority.
2. Welding: Welding shall be performed in accordance with the requirements of AWS or CWB Welders shall produce evidence of current certification by AWS or CWB.
3. Labeling Requirements: Every elevator shall be clearly marked with rated load and speed, manufacture serial number and the designated Authority identification.
   a. All elevators shall be permanently numbered with number designations corresponding to the indications on the kiosk annunciator panel. A station sketch showing the elevator numbers shall be submitted for WMATA ELES Engineering. The elevators shall be numbered in sequence, starting at the north entrance left to right facing to the elevator at each station and proceeding clockwise around the station. The numbering shall proceed into the station toward the end of the platform. Corresponding numerical identification shall be affixed to the equipment in the machine rooms. The elevator numbering shall be approved by the ELES Engineer.

1.03 SUBMITTALS

Submit the following for approval in accordance with the Contract Documents and with the additional requirements as specified.

A. Product Data

1. The summation of product information shall be submitted, in tabular form, of all parts incorporated in the entire group of elevators supplied under this Contract. Hard copies and electronic copies on the Flash Drive/Compact Discs (CDs) shall be submitted.
   a. Manufacturer's design data, material specifications, drawings, installation and maintenance instructions including preventive, predictive and general maintenance, and other data pertinent to the components used in the elevator systems, including, but not limited to, detailed repair data for all components, including disassembly, inspection/gauging/torque requirements, reassembly, testing and other related information. Submittals shall cover all mechanical components, operating panels and indicators and electronic equipment to control and monitor elevator control functions. Exploded view drawings shall be included to facilitate repair and maintenance functions.
   b. Lubricants, sealers, paints and any other potentially hazardous substances are subject to review and approval by the Authority. The Contractor shall submit the necessary Material Safety Data Sheets.
2. The following information shall be provided:

a. Nomenclature of part.

b. Elevator Contractor's part number

c. Nomenclature of next higher assembly in which used.

d. Manufacturer and part number.

e. Model number(s) of elevator(s) on which used.

f. Total quantity in entire group of elevators.

g. Current unit price to the Authority.

h. Recommended spare parts list showing parts with prices for each part. The parts listing shall be provided on or before 90 days prior to scheduled completion

3. Loads on supporting members, reaction points, and deflections under varying loads.

a. Loads imposed on the structure shall be coordinated with the Authority and not exceed agreed limits. This requirement shall be verified, documented, and stamped by a registered Professional Engineer Supporting calculations shall be provided for record file.

B. Shop Drawings

The contractor to provide detailed drawings that shows the dimensions and tolerance, specification that may include the material specification, hardness or electrical rating for each component that is being used. In regards to assemblies they must provide a top level drawing with BOM and quantities with detailed material specifications and drawings with dimensional tolerances. The contractor also to provide as-built CAD models of all elevator components.

The name of the manufacturer and type or style designation shall be listed on the each page of the equipment shop drawings. Drawings submitted shall include, but not be limited to, the following.

a. Fully dimensioned layout in plan and elevation, showing the arrangement of equipment and all pertinent details of each specified elevator unit, including as appropriate

1. All equipment located in machine rooms.

2. Location of circuit breaker, switchboard panel or disconnect switch, light switch, and feeder extension points in machine room. These electrical components shall not be blocked by anything.

3. Location in hoistway of outlets for connection of traveling cables for car light, fire detectors, communication, and control system.

4. Car, hydraulic cylinder and plunger, supporting beams, guide rails, buffers, and other components located in the hoistways.

5. Maximum guide rail bracket spacing. Guide rail brackets shall be provided at every horizontal structural member and shall be of sufficient strength to meet the ASME Code.
6. Reactions at points of supports.
7. Weight of principal parts.
8. Top and bottom clearance and over-travel of car.
9. Complete wiring diagram of the elevator system and subsystems. Complete data regarding electrical characteristics and connection requirements.
10. Refuge space on top of car and pit.
11. Cab design, dimensions and layout.
12. Color/material schedule and selection chart for cab and entrance features.
13. Hoistway Ventilation - Thermostatically Controlled, positive mechanical ventilation system.
14. Hydraulic Jack Details
15. Machine/Pump Room area, pit and hoistway layout.
16. Hydraulic piping layout indicating layout, type, size, and schedule of piping from machine room to elevator pit(s) indicating orientation of valve(s), and location of shut-off valve(s), and shall include calculations of working pressures.

b. Drawings of the hoistway entrances and doors showing their method of operation, details of construction, and fastenings to the structural members of the station structure.

c. Drawings of the car for each design specified, showing dimensions, details of construction, fastenings to platform, car-lighting, ventilation, air conditioning (if applicable), communication, and location of equipment.

d. Cuts or drawings showing details of all signal and operating devices, identifying graphics, and detailed design with diagram and schematic of kiosk annunciator panel.

e. Hydraulic drive:

1. Cylinders and plunger.
2. Power unit, including volume, rate of flow, working pressure, rpm of pump, and horsepower, voltage, frequency, service factor and rpm of the motor.
3. Piping, fittings, and couplings.
4. Valves.
5. Storage tank.
6. Muffler.

7. Hydraulic Jack Details Drawings
8. Fluid flow diagram showing all valves, operating devices, and controls.
9. Complete assembly detail of machine/pump, hydraulic tank mounting, with all load calculations.

f. Elevator controller, including manufacturer's technical data and catalog cuts, and interface hardware and software requirements.

g. Power door operator.

h. Door interlocks and electrical contacts including test reports showing that hoistway door interlocks, car door contacts, and car top emergency contacts meet the requirements of the ASME Code and certification by the NIST or other approved laboratory.

i. Car ventilation fan.

j. Car Air Conditioning (if applicable)

k. Car lighting.

l. Cabling.

m. Buffer, including stroke and certified maximum striking speed for car.

n. Communication and intrusion system design details covering electrical, mechanical, and architectural aspects.

o. Design and architectural details, including light ray unit locations, of the electrical protective device for car doors.

p. Where the use of adjoining dissimilar metals is required, descriptions of protective measures to be employed to avoid corrosive damage.

q. Certification from independent testing laboratory that glazing gaskets meet the specified requirements.

r. Hall and car fixtures at each landing including the car operating panel (COP).

s. Interface wiring diagrams with other systems showing terminal board location and identification.

t. Expected heat dissipation of elevator equipment in machine room and control areas (i.e. BTU's/hr.) based on 240 round cycles per hour.

u. Complete wiring diagram of the elevator system and subsystems. Complete data regarding electrical characteristics and connection requirements.

v. Complete assembly detail of machine/pump, hydraulic tank mounting, with all load calculations.

w. Lubricants, sealers, paints and any other potentially hazardous substances are subject to review and approval by the Authority.

The Elevator Contractor shall submit the necessary Material Safety Data Sheets.

C. Samples

1. Three of each of the following samples shall be submitted for approval:

   a. Steel cladding: Baked-enamel finish, six inches square. The sample shall show the rust-proofed surface of the base metal on one side and the prime and finish coats (stepped) of enamel on the other side, although both sides of actual panels are to be enameled as specified.

   b. Sheet metal: Six inches square of thickness and finish specified.

   c. Stainless steel cladding: 12 inches square of thickness and finish specified.

   d. Glass: 12 inches square.

   e. Floor covering: 12 inches square in the color and finish to be supplied.

   f. Neoprene gasket: Each type.

   g. Landing selector button mounted in cover plate with identity marking alongside button.

   h. Signs: One of each type.

   i. Ceiling material.

D. Certification:

1. Certificates of inspection and acceptance issued by Jurisdictional Authority.

2. The Acceptance Inspection (Specifications and Code) by the Elevator and Escalator (ELES) Department shall take place prior to the Final Acceptance Inspection by the Jurisdictional Authority, and the elevators and associated equipment shall be free of defective material, imperfect work and faulty operation.

   All defective work identified by ELES representatives shall be repaired or replaced at no additional cost to the Authority prior to the Final Acceptance Inspection by the Jurisdictional Authority.

E. Operation & Maintenance Manuals.

Six sets of the approved manuals, elevator installation, operation instuctions, troubleshooting techniues and related equipment drawings and software (all publication must be in English) – two copies of which to be delivered to the WMATA/ELES Engineer representing of the Authority prior to installation. Each binder shall has the Binder Cover and Spine Insert which contain the Station Name and Unit ID.

Submit an additional electronic copy on Flash Drive(s)/CD(s). The Information shall be saved/presented as follows:

a. Graphic images in ".dwg" AutoCad and ".pdf" formats. All revisions shall be made by

using computer software. Hand written changes are not acceptable.
b. Text in Microsoft Word .doc, ".pdf" or approved equal format.

The manuals shall include the following:

1. Complete operation and maintance Instructions of the elevator equipment included complete illustrated, exploded views of all assemblies and a complete illustrated, exploded view for identification all system parts.

2. Complete nomenclature of replaceable parts, part numbers, current cost, and warehouse location. If product source is another vendor, Contractor shall include name and address of other vendor.

3. Furnish a summation, in tabular form, of all parts incorporated in the elevators supplied under the Contract. Include but not be limited to the following:

   a. Nomenclature of part.

   b. Contractor's part number.

   c. Nomenclature of next higher assembly in which used.

   d. Manufacturer and part number.

   e. Model number of elevator on which used.

   f. Total quantity.

   g. Current unit price to the Authority.

   h. Serial numbers of all serialized assemblies, subassemblies, motors, and other major components supplied and installed.

4. Control and schematic electrical wiring diagrams of controller including wiring of safety devices.

   a. Wiring Diagrams shall be full size (11x17), ladder type, complete "as-built" wiring and single line diagrams showing the electrical connections, functions and sequence of operation of apparatus connected with each elevator, using standard symbols or proprietary symbols defined on the diagram, both in the machine room and in the hoistway, shall be furnished in duplicate for each elevator.

   b. Wiring diagrams shall incorporate the wiring identification labeling to identify the controller and field wiring used for each circuit. Wiring diagrams shall have sheets numbered with an indication of the total number of sheets in the diagram set. Each page should include unit number where the diagram belongs to.

   c. After approval, a copy of each print (11x17) shall be laminated and mounted with non-metallic holder in each elevator machine room. A reproducible .003 mil Mylar set of wiring diagrams for each elevator shall be delivered to ELES Engineering Office.

   d. Coded diagrams are not acceptable.

5. Complete detailed drawings and wiring diagram of elevator system.
6. Lubricants, sealers, paints and any other potentially hazardous substances are subject to review and approval by the Authority.
    a. Provide MSDS for all the lubricants/chemicals.
    b. Provide manufacturer part number.
    c. Provide name of the manufacturer.
7. Detailed lubrication and cleaning schedule.
8. Procedures for adjusting all elevator components.
9. Complete set of contract software including operating control software.
10. Detailed, record and as-built layout drawings.
11. The entire manual, all software upgrades and service tools for elevators shall be provided in an electronic format on Flash Drive/CD-ROM that is acceptable to the WMATA Engineering and Maintenance Department.
12. All hard copy publications shall be in loose-leaf form, on 30-pound paper and with punch holes reinforced with plastic, cloth or metallic material.
    a. The O&M manual shall only contain information related to equipment installed under this contract. Generic information that does not pertain to the equipment installed shall not be included. Scanned documents are not allowed. The fonts should be standard format.
    b. All covers shall be resistant to oil, moisture, and wear commensurate with their intended use. Diagrams and illustrations shall not be loose or in pockets. All printed material shall be capable of being reproduced on dry copying machines.
13. Each elevator shall be treated as a whole and not as a grouping of disassociated parts. The material in the Wiring Diagram Manual shall be organized and indexed by the elevator classifications included in this Specification. All manual sections shall be sub-divided, to the extent required by the subject matter, and shall include, but not necessarily limited to the following topics:
    a. General system or sub-system description and operation.
    b. Sequence of operation.
    c. Replacement and step by step adjustment procedure for all components and systems.
    d. Block diagrams.
    e. Functional schematics.
    f. Functional as-built wiring diagram.
    g. Lubrication and cleaning, including frequency, methods, and trade identifications of recommended materials.
    h. Component location and description.

i. Inspection and maintenance standards including wear limits, settings, and tolerances.

j. Installation and removal sequence.

k. Test and evaluation procedures.

l. Spare parts lists and special tools.

14. The contractor shall provide all information: manuals, drawings, design changes, modifications, techniques, procedures and any other documents related to maintenance, safety, operations which relate to any part, component, system, subsystem or material and applicable to the elevator equipment. All operating, programming, control software and licensing keys (if applicable) to the PLC control system for the installation.

15. All of the above referenced shall be provided as it pertains to the original installation and for a period of ten (10) years after final acceptance of the elevator. During a ten (10) years period, In case of any items are obsolete or no longer available from the manufacturer the Elevator Contractor shall provide the alternative products.

1.04 SYSTEM DESCRIPTION AND PERFORMANCE REQUIREMENTS

A. Design Requirements:

1. General:

a. Elevators furnished under this Contract shall be of the heavy duty automatic, hydraulic-type with direct-acting plunger.

b. All parts shall be built to standard dimensions, tolerances, and clearances so that similar machines and devices supplied under contract are completely interchangeable. Elevators shall be designed with provision for thermal expansion and contraction of complete elevator assemblies and for any movement of the facility.

c. Fasteners: Fasteners shall be compatible with materials being fastened. Fasteners shall be furnished with self-locking nuts or retaining rings (spring washers, toothed disks). Fasteners shall be equal to or of greater corrosion resistance than the most corrosion resistant metals being fastened. The mechanical fastening used throughout the equipment on parts subject to wear and requiring replacement shall be key and seat, nut, screw, or other removable and replaceable type not requiring physical deformation or field positioning. The use of rivets or similar devices will not be acceptable as mechanical fastenings for such parts.

d. Doors of elevators shall be of the horizontal sliding type, single speed, center-opening. The doors shall be arranged for low-speed electric power operation.

2. Capacity, Speed, Travel, Platform Size

a. All parts of the elevator equipment shall be of such design, size, and material as to satisfactorily function under all conditions of loading and operation within its rated load and speed, all with a proper factor of safety, maximum mechanical and electrical efficiency, and a minimum wear on parts.

b. Hydraulic elevators shall have sufficient capacity to lift the rated load at 150 feet per minute, with a tolerance of plus or minus 8.0 percent.

c. The rated load shall be exclusive of the weight of the complete car and shall be determined in accordance with ASME Code requirements for passenger-elevators required to carry freight, Class C3 (ASME A17.1 Section 2.16) or 4500 lbs, whichever is greater.

d. The travel, location, terminal floors, number of stops and openings, and the overall car platform size shall be as shown on the Contract Drawings.

e. The anticipated freight load (cart) will be approximately 4 feet-1 inch by 2 feet in plan, supported on four 8-inch wheels with 2-inch wide treads spaced approximately 2 feet-4 inches center-to-center longitudinally and one foot five inches center-to-center transversely. The loaded cart will weigh approximately 1,260 pounds.

f. The entrance of the cart into the elevator car will produce eccentric forces which, acting through the guide rails, will result in additional deflections and deformation on the hoistway. These deflections and deformations shall not exceed 1/16 inch and shall not be permanent.

g. The top enclosure shall be reinforced to support two men and capable of sustaining, without damage or permanent deformation, a load of 300 hundred pounds on any area one feet square and 100 pounds applied at any point. An emergency exit shall be installed in the car top in conformance with the Code.

h. In-ground (Holed) hydraulic elevator travel shall not exceed 36 feet.

B. Performance Requirements

1. The elevators shall be designed for continuous operation seven days per week, 24 hours per day.

2. Elevators shall be designed to be capable of operating with full specified performance capability while exposed to the climatic and environmental conditions described in the following paragraphs. In addition, during installation and until the beginning of scheduled maintenance service, the elevators will be subject to more extreme environmental conditions. The elevator shall be furnished the amount of protection necessary to prevent any damage to or deterioration of the elevators during this period.

a. Elevators shall be designed to operate in dry bulb temperature range of -10^{0}F to 140^{0}F and operate while exposed to the natural elements of weather, including sunlight, rain, snow, slush, salt; all condition of relative humidity, de-icing chemicals, debris, airborne dust, and corrosive elements.

b. The elevators shall have a special winter operation. The elevators shall be designed to operate in the event the outside temperature falls below a pre-established minimum value. The elevator contractor shall furnish and install the necessary timers and thermostat to accommodate the desired function

3. Sound Level: No elevator car or elevator power unit shall generate noise in excess of NC45 sound level. Measurement of noise shall be made at a point 3 feet from the hoistway, machine room entrances, and ventilation openings, either free running or under load. For multiple elevator installation, the noise measurements shall be made with only one (1) elevator unit in operation, but with the entire installation complete and in operating condition. An ambient level not to exceed forty-nine (49) decibels shall be maintained prior to units being turned on.

4. Hoistway Movement:

   Elevators shall be designed to sustain the load and operate with the following lateral movements of the hoistway structures:

   a. In any individual glazed area: 1/4 inch.

   b. In total height of hoistway structure:

      1. Aerial and surface structures: 5/8 inch

      2. Underground structures: ½ inch

5. The elevator assembly shall be designed in a manner to avoid corrosion and galvanic action due to physical contact between dissimilar metals or due to other causes.

6. Reliability:

   1. Each elevator shall be capable of operating at full load under any of the normal modes of operation at a level of availability of not less than 98 percent over a period of 365 days.

   2. Availability (*A*) is defined as the portion of normal operational time during which the equipment is available for use. Or

$$A = \frac{MTBF}{MTBF + MTTR}$$

Where:

MTBF = Mean time between failure in days

= Operating time, *t* (in days) /Number of failures in time *t*

MTTR = The average time in days required to restore an elevator to operation after a report of a failure.

B. Seismic Loads

1. In accordance with VA-USBC 2003, all structures shall be designed to resist the effects of earthquake motions.
2. The elevator shall be designed to comply with the seismic zone 2 requirements of ASME A17.1.

C. Make provision for and provide a closed circuit television camera (CCTV), in the elevator car(s) with the ability to monitor the CCTV from the Kiosk annuniciator panel. Submit drawings for approval before fabrication.

a. Provide electrical connections, through shielded traveling cables, between camera and the communications terminal block in machine room or pit.

D. Painting: The pit, pit walls and machine room floor shall be painted. All machine room equipment shall be given two coats of approved machinery paint. All new iron work shall be given one coat of rust- inhibiting paint.

E. Workmanship:

1. Joints shall be welded their full length and dressed smooth and flush on exposed surfaces. Spot welding shall be sued where practicable in preference to screw or rivet fasteners.
2. Sheet metal materials shall be accurately rolled and leveled, and have smooth finish and uniform color. Joints shall be formed to a tight fit, with abutting edges flush, and shall be securely welded or riveted together in such a manner as to give strength equivalent to the solid sheet. Riveted construction shall have heavy reinforcement on the back, and no rivets shall show on exposed surfaces, Welds shall be solid and dressed flush, and holes for screws or bolts shall be drilled and countersunk.
3. Wrought work shall have joints milled to a tight even fit and, where possible, shall be made without screws. Square turns and comers shall be sharp, Curves and loops shall be true and without visible joints. Abutting members shall be welded, riveted or both. Similar bars shall be halved at intersections and wide bars shall be punched for the small bars to pass through.
4. The finished work shall be strong, rigid and neat, painted in appearance. Plane surfaces shall be smooth and free from warp or buckle. Molded members shall be clean cut, straight, and true. Miters shall be well formed and in true alignment. Fastenings shall be concealed from face side of the material.

G. Corrosion Protection: The contractor shall design the elevator assembly in such a manner to avoid corrosion and galvanic action due to physical contact between dissimilar metals or due to other causes.

1.05 PROJECT SITE CONDITIONS

A. The project site premises shall be visited by the Contractor to thoroughly familiarize with all details of work and working conditions. All dimensions shall be verified in the field and by comparison with the station structural and finish (information) drawings and the Authority shall be informed of any discrepancy before ordering equipment or performing work. Coordination and proper relation of this work to the structure and to the work of all trades shall be performed.

B. The elevator installer shall install all elevator wiring in the embedded conduit provided by other trades including that to the kiosk. Other trades will bring wiring for their services to either the elevator machine room or the elevator pit, terminated on a terminal block. The elevator installer shall extend wires from the terminal blocks to the appropriate location or device within the elevator enclosure or hoistway. Some of these circuits shall require shielded wires or separate isolated circuits.

1.06 WARRANTY

Warranty: Two (2) year warranty of construction shall start at Final Contract completion.

A. The OEM shall warrant in writing that all equipment manufactured and installed under this specification, for a period of twenty four (24) months from the date of Final Acceptance by the Authority, be free of defects in design, materials, and workmanship, under normal use and service. Defective work shall be repaired or replaced at no additional cost to the Owner.

B. The warranty shall include materials and labor necessary to correct defects.

C. The warranty does not begin until all of the following requirements have been met.

1. The Operations and Maintenance Manuals are accepted by WMATA.
2. The required training has been completed to the satisfaction of WMATA.
3. All field tests have been successfully completed.
4. The acceptance testing has been successfully completed.
5. The elevators are in service for passenger/public use.
6. The State and local jurisdictions have inspected the elevators and issued the respective certificates of Operation.
7. All spare parts have been delivered and received by WMATA.
8. Any discrepancy identified by the ELES representative shall be repaired or replaced by the Contractor at no additional cost to the Authority.

1.07 OPERATION AND MAINTENANCE TRAINING

A. Training: The Contractor shall develop and provide operation, troubleshooting and maintenance training in accordance with the General Requirements

The following training requirements shall be met:

1. Three days of classroom plus two days hands on training on the field shall be provided for 10 students per class. Six training session for a total of 60 students is required.
2. Time and place of training will be determined by the Authority, but

must be completed no later than 30 days prior to the Final Completion.

3. Training shall be organized to make optimum use of the required maintenance and operation manuals including training for replacement of all parts contained in the Parts Inventory list.

4. At the completion of the first training session, a narrated and properly edited training video shall be submitted for the authority on DVD or flash drive. The video shall be taken by the professional camera operator with quality image and sound track and will be used for the future trainings. The video shall cover operation of the elevator, function of the devices, maintenance, adjustment procedures and troubleshooting. The following items shall be included as minimum requirements:

   1) Step by step adjustment procedure on the followings:
      1.1 Door operators, DCL, DOL, full door opening, and so on…
      1.2 Valve adjustment
      1.3 Car Leveling and adjustment of leveling sensors and vans
      1.4 Door: door interlock, proper pressure, restrictors ...
      1.5 Pump motor: belt tension and alignment
   2) General overview of major items:
      2.1 Packing:
      2.2 Piston:
      2.3 shut of valve
      2.4 Controller:
      2.5 Controller display:
      2.6 Hydraulic pump
      2.7 Hydraulic tank
      2.8 Door sills
      2.9 Guide rails
   3) Daily operation and sequence of operation
   4) Replacement and Installation of components:
      4.1 hydraulic packing
      4.2 door photo eye
      4.3 Hydraulic valve
      4.4 Door clutch
      4.5 Door pickup rollers
   5) Proper guide roller adjustment
   6) Verification of safety circuit
   7) Maintenance procedure and Frequency of maintenance
   8) Proper access of pit and top of car for inspection
   9) Proper test of fire service operation
   10) Proper lubrication of components
   11) Troubleshooting techniques
   12) How to use proper communication device, machine room, car top, and kiosk

5. Provide one additional copy of all required submittals to the ELES Engineer for Authority use.

6. Provide two copies in DVD format of training materials along with visuals and handouts to the Engineer for the Authority use.
   a. Video shall be narrative.
   b. Video shall be separated by major components Sections
   c. Equipment Identification shall be as a part of the section title.

7. Separate training manual shall be submitted for approval prior the scheduling of the training. The O&M manual shall not be used as a training manual.

B. Scope of Work

1. All training, as described below, shall take place prior to Final Acceptance of equipment or materials by the Authority. Operations and maintenance training may take place as a combined class by agreement of the Office of Elevators and Escalators (ELES). The minimum number of ELES employees to be trained will be no fewer than 60 total with a maximum of 10 per class. Those persons will be identified by WMATA. The contractor shall video tape all training sessions and provide WMATA/ELES with edited copy of the recording as stated above.

2. Operations training shall be tailored specifically to the furnished and installed equipment, and designed to teach the day-to-day operation of all equipment. The training shall be sufficient to bring personnel to a level of operating proficiency such that routine vendor support is not needed.

3. Maintenance Training shall be tailored specifically to the furnished and installed equipment, and designed to develop the knowledge and skills required to maintain all item(s) delivered.

4. Maintenance training shall be subdivided into two major levels as follows:

   a. System Level Maintenance Training, covering:

      1. Theory of operation of the system and its major components.

      2. System configuration.

      3. Preventative maintenance, consisting of written procedures and schedules for the periodic maintenance of all equipment.

      4. Written and validated inspection procedures and a system-level trouble-shooting guide (to the lowest field-replaceable unit).

   b. Shop Level Maintenance Training, covering

      1. Detailed theory of operation to module, board, and/or device level.

      2. Component level troubleshooting and component replacement and adjustment.

      3. Testing and alignment procedures of repaired units.

C. Deliverables

1. The following course materials shall be delivered by the Contractor, according to the following specifications:

   a. An Instructor's Guide containing all the information and direction necessary for the instructor to make an effective presentation. It shall include adequate guidelines to conduct a comprehensive training program. Individual lessons within the course shall be organized as separable blocks (or modules) which may be taught as a unit. The Instructor's Guide shall contain, as a minimum:

      1. Discussion of student prerequisites (if any).
      2. Program overview.
      3. A statement of overall program goals.
      4. Lesson plans (a session-by-session outline containing the following):
         a. Student learning objectives, stated in measurable term
         b. Overview of each lesson.

   b. A Student Manual including all materials for the student to interact in the learning situation. It shall contain, as a minimum:

      1. Program overview and introduction.
      2. Statement of overall program goals.
      3. Learning objectives, stated in measurable terms that specifically describe desired behaviors or knowledge to be gained.
      4. A fully developed prose treatment (not outline format) of content presentation, developed in the same modular format as the Instructor's Guide.
      5. Illustrations, charts, photos and other graphics of actual system components as needed to enhance content presentation.
      6. The training manuals shall be prepared and submitted for approval to WMATA/ELES prior to training. The training manuals shall include procedures for adjustment and replacement of all electrical and mechanical components, and a troubleshooting guide.

   c. Audio-visual Aids consisting of a narrated video of not less than 90 minutes duration to include, but not limited to, the following:

      1. General overview of major features.
      2. Daily operations.
      3. Maintenance procedures such as lubrication, adjustments, critical measurements, etc.

4. Frequency of maintenance procedures.
5. Parts replacement such as safety devices, lighting, etc.
6. Verification of safety circuits, methods of accessing and preserving computerized functional data if required.
7. Step by step adjustment procedures and installation of components.
8. Handouts, transparencies and/or slides as necessary to ensure clear and comprehensive presentations.
9. The training video shall be taken from actual equipment installed under this contract by the professional camera operator

D. Supplemental Materials consisting of a functional mock-up or a functional representation is required of any equipment that requires theoretical discussion. This may be in the form of an animated schematic, a model of the equipment, an actual device, an interactive video training device, or an Authority approved substitute. All mock-ups shall become the property of the Authority for eventual turn over to WMATA/ELES.

E. The final copies shall be delivered to the Authority as follows:

1. One complete set of training materials that is completely camera-ready. Camera-ready copy is defined as typewritten or typeset originals or high-quality copies such that further copies can be made from them with no noticeable decrease in copy quality.
2. Five copies of all student and instructor materials, to be used for archival purposes, in the WMATA ELES Technical Library.
3. A set of complete student materials including training manuals for each participant enrolled in training classes. The O&M manual, training manuals and special tools shall be approved by the Engineer and delivered to the Authority for eventual turn over to WMATA ELES.
4. The contractor shall video record all training sessions and provide WMATA/ELES with edited DVD copy of the recording to be used as training guide for other WMATA ELES employees.

F. The following specifications shall be met in instructional delivery:

1. Instructor Qualifications. A description of instructor qualifications, a resume, curriculum vitae, or other description of instruction qualifications must be submitted at least 60 days prior to the presentation of training. The description shall document a thorough knowledge of the equipment being taught, an understanding of the adult learning process, and demonstrated experience in vocational instructional. The ELES Engineering Office will review and approve the Instructor candidacy.
2. Course length - The length of the course shall be 5 working days with 3 days in the classroom and 2 days hands-on training.

3. Student qualifications - For the purposes of course development and presentation, vendors shall assume all WMATA students are high school graduates (or equivalent), and that maintenance personnel will possess the ability to use basic hand tools and electronic test equipment.

4. Testing. Instructors must give written and/or practical tests as a measuring device to determine knowledge transference. Tests shall use a multiple-choice or short answer format, and have been validated in a pilot course or by some other means agreed to by the Authority and Contractor. Whenever possible, a practical hands-on test shall be developed to demonstrate the transference of operational/ mechanical skills.

1.08 SPARE PARTS AND SERVICE FACILITY

A. Spare Parts

At the expiration of the warranty requirements of the General Provisions, the Contractor is responsible to provide a source for spare parts and service facility in the United States which can be obtained for an additional five years. If product source is another vendor, Contractor shall include name and address of other vendor.

1. The Contractor shall propose and provide a spare parts inventory to be approved by the Engineer and provided to the Authority not less than 90 days prior to scheduled completion, equal in value to seven percent of the cost of each elevator.

2. This provision requires the furnishing of a Recommended Spare Parts and Special Tools List based on manufacturer’s recommendations, defines criteria to be used by the Contractor in developing spare parts recommendations; defines the manner of identifying spare parts on the list and the labeling and identification of spare parts upon delivery; and the timing of delivery of spare parts.

3. Elevator parts list, grouped by system and subsystem for stocking identification and the list shall contain the following information for each item listed:

   a. Component name and Part number(s)

   b. Manufacturer's name

   c. Model number(s)

   d. A blank column for WMATA's part number

   e. Manufacturer's recommended quantity (see Section 1.08A.4 below)

   f. Anticipated annual usage

   g. Unit price

   h. Special storage and handling requirements

4. The manufacturer's recommended quantities shall be based upon the following reliability, usage and lead time considerations:

a. Wear: Components which may be expected to require replacement under normal maintenance schedule and operations, such as mechanical parts subject to continuous operation within projected mean time between failure levels.

b. Consumables or Expendables: Components which are consumed, used up, destroyed, or upon failure, are otherwise made usable for their intended purpose and are economically unrecoverable except for inherent scrap value.

c. Recoverable or Repairable: Components which, upon failure, are capable of being repaired or remanufactured to a serviceable, operational condition and maintained available for use within their initial intended purpose.

d. Long Lead: Components that are not available from commercial distributors or within 48 hours from the manufacturers such as specifically made or selected components.

5. Cross referencing: Where replacement components are common to more than one system or subsystem, include a cross reference and indexing system in the replacement components list:

6. Non-Unique parts: In all components lists, items that are not unique to the system and have been manufactured by others shall be identified by the manufacturer's name and part number.

7. WMATA will provide the Elevator Contractor with shipping instructions, with WMATA part numbers for each item the Elevator Contractor is required to furnish.

8. The parts shall be shipped to the locations as directed by the Authority. Shipping documents shall identify the Contract number, manufacturer's part number, quantity, unit price and WMATA part number.

9. Spare parts shall be properly packaged or crated so as to prevent damage during shipment and long-term storage. An individual packing slip shall be included inside the package or crate.

10. Spare parts shall be the same in all respects as their counterparts furnished as a part of the assembled equipment to be delivered.

11. Parts furnished in accordance with this provision are WMATA spares, separate and distinct from any Contractor obligation to replace parts, components or assemblies under any warranty provision.

12. Parts lists contained in Operations and Maintenance Manuals provided under the Contract shall include assigned WMATA part numbers.

13. A Manufacturer’s Recommended Spare Parts List shall be provided. Parts to be provided shall be based on the criteria described herein and require Authority approval and shall be provided prior to Final Acceptance.

14. Any Special Tool(s) used including, but not limited to, troubleshooting, maintaining the elevator, software and/or hardware shall be provided as part of the spare parts to the Authority. Any tools provided shall be the

same as those issued to the Adjuster and equivalent members of the subcontractor's staff.

B. The finished elevator installations shall be completely barricaded and enclosed to preclude their use without permission of the Contractor until Final Acceptance and release by the Contractor for general use. The enclosure shall be fabricated to allow easy access for maintenance, testing and adjustment.

C. The Contractor shall be responsible for the security of the contents of each machine room. The Contractor shall control access to that room, and ensure that it shall remain secure at all times until the completion of the Contractor's interim maintenance obligation.

1.09 SPECIAL TOOLS

A. A complete set of special tools and instruments necessary for troubleshooting, maintenance, repair and making all adjustments on every part of the elevator installation, including software and hardware shall be furnished for each elevator and delivered to the Engineer as part of the spare parts inventory. Tools that are designed specifically for tasks associated with elevator inspection, maintenance and repair or that are required for these tasks, and are not readily available through normal purchasing channels are defined as special tools.

B. Any "Special Tool/ equipment" that is required to troubleshoot, maintain, adjust, and test the system; the tool/equipment shall remain operational for the life of the equipment.

a. Provide all special tools and equipment necessary for making all system adjustments to the signal and speed controller and door equipment. A programming unit, approved by equipment manufacturer (OEM) such as a new laptop with 4GB memory, 15-inch display and DVD drive, with all software packages required to setup and program all equipment in the elevator system shall be provided, one per station or location. Software shall be provided for the display unit, DeviceNet, hoist motor drive, if applicable, and any other programmable devices, as well as for the controller PLC. Any hardware or software required for configuring, programming and or communicating to controller or any parts of the elevator shall be submitted to ELES engineering. Using the provided laptop, the contractor shall demonstrate loading, downloading (programming) any and all software that is required for the elevator for all operating needs. This includes display, PLC and any I/O controls. All special tools shall be new and to be provide with casing. No special tools with decaying circuits or clocks are permitted.

C. Keys: Provide ten (10) sets of keys per elevator to operate all keyed switches and locks prior to completion of the first unit.

1.10 AUTHORITY COORDINATION:

The elevators shall not be in service for passenger/public use until all of the following requirements have been met.

1. The Operations and Maintenance Manuals have been approved and received by WMATA.
2. The Training and Student Manuals as well as video record of all training sessions have been approved and received by WMATA
3. The required training has been completed in accordance with this specification.
4. All field tests have been successfully completed.
5. The acceptance testing has been successfully completed.
6. All spare parts have been delivered and received by WMATA.
7. All Special Tools/Equipment and Software have been delivered and received by WMATA.
8. All discrepancies identified by the WMATA's CEI (Certified Elevator Inspector) representative shall be completed.

PART 2 – PRODUCTS

2.01 MANUFACTURERS

The major elevator components shall be the products of one of the three manufacturers of established reputation, except they may be the products, either wholly or in part, of another manufacturer of established reputation provided such items are capably engineered and produced under coordinated specifications to ensure a high grade, safe, and smooth operating system. Also, the major components to be furnished for this project shall be of a make or makes that have performed satisfactorily together under conditions of normal use for not less than one year in at least two other elevator installations of equal or greater capacity and speed.

2.02 MATERIALS

A. Stainless Steel

1. Shapes and Bars:
   a. ASTM A276, Type 304 or 301 for non-exposed components, and Type 316, all finish panels and exposed components.
2. Plate, Sheet, and Strip
   a. Over 1/8 inch, ASTM A264 with ASTM A240, Type 316 on ASTM A36 base;
   b. Under 1/8 inch, ASTM A167, Type 304, Type 316, for all finish panels and exposed components.
3. Stainless steel finish shall be NAAMM NO.4 with vertical grain.
4. Stainless steel screws, bolts and nuts shall be used for fastening and shall be AISI Alloy 303.

B. Steel Sheet and Steel Fabrications

1. Steel sheet for top enclosure shall be minimum 12-gauge.

2. Steel sheet for hoistway door frame shall be minimum 12-gauge.
3. Steel sheet for corrugated floor decking shall be minimum 10-gauge.
4. Steel sheet for subfloor shall be minimum 3/8-inch thick.
5. Galvanized steel material shall comply with ASTM A123, ASTM A153, and ASTM A653 (G90 Coating) as applicable. All steel sheet and steel fabrications, except lubricated machinery parts, which are not shown or specified to have other applied finishes, shall be galvanized.

C. Steel Finishes

1. Where visible to the public, steel surfaces shall have a baked enamel finish unless otherwise shown.
   a. Color shall meet the requirements as shown in the finish schedule on the contract drawings.
   b. Baked enamel finish shall consist of a thorough hot chemical cleaning process, a six-step zinc-phosphate process, two prime coats, and one finish coat of sprayed acrylic enamel (1.25 mils thickness minimum), baked at 350ºF for a minimum of 30 minutes.
2. Fasteners

   Fasteners securing removable sheet metal materials shall be operable with the aid of simple tools and concealed wherever possible. When the framework to which the metal is fastened is less than 1/4-inch thick, steel backup plates 1/4-inch thick shall be added with tapped holes and clearance holes where necessary. Exposed fasteners shall match the color and finish of the material being fastened, and shall be tamperproof flat-head machine screws of a captive screw fastener design.

   a. Fasteners shall be compatible with materials being fastened.
   b. Fasteners shall be furnished with self-locking nuts or retaining rings (spring washers, toothed disks).
   b. Fasteners shall be equal to or of greater corrosion resistance than the most corrosion resistant metals being fastened.

2.03 EQUIPMENT AND COMPONENTS

A. The hydraulic elevator drive shall be of the oil-electric type with direct-acting plunger, power unit, oil storage tank, and control equipment. The power unit, storage tank, and associated control equipment shall be mounted in the machine room.

1. Cylinder and Plunger:

   a. The cylinder and plunger unit shall be designed and constructed in accordance with the applicable requirements of the ASME Code and other applicable codes. It shall be of sufficient size to lift the gross load to the height specified and shall be factory-tested at a pressure of 400 psi. Gray cast iron or other brittle materials shall not be used in the construction of the cylinder and plunger unit. The cylinder shall be coated on the outside to prevent rust and corrosion. The bottom of the cylinder shall be closed and the top provided with an internal guide bearing and a cylinder head. The cylinder head shall be equipped with an adjustable packing gland designed to effectively prevent leakage of oil. A scavenger pump shall be provided to return oil to the system. It shall be located so as not to obstruct the path between the pit entrance and the cylinder.

   b. The packing gland shall be constructed to permit easy repacking.

   c. The cylinder shall be provided with a means to release air or other gas and shall have a drip ring below the packing gland to collect all oil leakage.

   d. The cylinder shall be secured to a support, provided by the Contractor, which will transfer and distribute the load to the floor of the hoistway pit.

   e. Plunger of built-up construction shall be secured to the car platform by means of a suitable platen.

   f. Plunger shall be designed to prevent its leaving the cylinder.

   g. The cylinder shall be isolated from soil, ground water, pit channel, building structure and other sources of possible corrosive or galvanic damage by being installed in a PVC casing with the area between the cylinder and the casing left empty and free of water and oil.

   h. The cylinder shall be coated with corrosion-rust resistant primer and painted with a dark gray industrial epoxy or other approved paint.

   i. The top of the cylinder shall be jointed to the PVC liner by a victaulic coupling forming a sealed unit.

2. Well Hole and Casing

   a. Well Hole and Well Hole Casing

1. The well hole shall be plumb enough to provide a plumb installation of the PVC inner casing and pressure cylinder.
2. The well hole outer casing shall be installed to retain the well hole for installation of the PVC casing and pressure cylinder.
3. The well hole casing shall be 3/8” thick welded steel pipe.

b. PVC Casing:

1. The PVC casing inside the well casing shall be ½-inch thick minimum, water tight and free of any liquid or debris after being installed plumb in the well hole.
2. Exterior surface of casing shall be cleaned prior to application of solvent welding material to ensure watertight connections.
3. The PVC casing shall be capped with PVC to prevent liquid and debris from getting in the area between the PVC casing and the cylinder.
4. The PVC casing shall be capped at the bottom.
5. Provide top of PVC with a PVC pipe coupling connecting with cylinder victaulic coupling.
6. A PVC pipe shall be installed in the PVC casing to allow installing hydraulic piping to the cylinder. The PVC casing shall be secured at its base relative to the outer casing. Gaps between the PVC and outer casing may be filled using clean, dry backfill or other approved material.
7. An electronic monitoring device shall be installed to detect the presence of oil or water in the PVC casing. A “Liquid in Casing” alarm signal shall be provided to the elevator controller for display on the fault display and transmitting to the remote monitoring system.
8. An evacuation tube with an evacuation port shall be provided between the PVC liner and the cylinder.

3. Cathodic Protection

a. The cathodic protection shall be provided for cylinders and piping and shall be provided by dielectrically isolating the cylinder and piston from the car platen, pit support structure, and pressure piping.

b. Gaskets and pads for dielectric insulation shall be neoprene or approved alternative. Insulating sleeves, washers, and oil line coupling shall be provided where specified or shown.

4. Power Unit

   a. The power unit shall consist of a screw-type or gear-type oil pump driven by an electric induction motor with oil control valves, combined in a self-contained unit fabricated of structural steel. Power unit drive motor is specified under Electrical Work (See Section. Submersible units will not be accepted.

   b. The oil pump shall be especially designed and manufactured for hydraulic elevator service. It shall be designed for a steady discharge with minimum pulsation to give smooth and quiet operation. The pump shall be of proper size and shall deliver oil into the cylinder in sufficient quantity and pressure to lift the elevator car with specified load at specified speed. During downward trip of elevator, the oil shall be returned to the tank by gravity.

   c. Geared pumps, when used, shall be provided with accurately cut herringbone or helical gears. The gears shall operate under flooded suction in an accurately machined case with close clearances to assure maximum efficiency. An effective strainer shall be provided in the suction line to the pump. The power unit shall be equipped with a vibration isolation device suitable for use with and approved by the power unit manufacturer. The vibration isolation shall effectively prevent the transmission of power unit vibration to the machine room structure.

5. Piping, Fittings, and Couplings

   a. Piping, fittings, and couplings shall be furnished and installed between the storage tank, pump, muffler, valves, and cylinder complete with necessary supports.

   b. All connections between the discharge side of the pump, check valve, muffler, cylinder, and lowering valves shall be of rigid steel with screw, flanged, welded, or approved mechanical couplings.

   c. Pipe supports shall be provided within 12-inches of every change of direction in piping.

      1. Supports shall not be more than 10-feet apart.

      2. Secure vertical runs properly with iron clamps at sufficiently close intervals to carry weight of pipe and contents and provide supports under pipe to floor.

      3. Furnish and install all piping from remote machine room to hoist way, including necessary supports and/or hangers.

   d. Size of pipe and couplings between cylinder and pumping unit shall be such that fluid pressure loss is limited to 10 pounds.

   e. Mechanical couplings, when used, shall be of a self-centering type that provide for some degree of deflection, contraction, and expansion.

1. Couplings that provide for partial or full separation of the two sections of piping being connected are acceptable, provided all other specified requirements are met.
2. Couplings shall be rated for a pressure at least three times the working pressure of the elevator and shall be so designed that failure of the flexible sealing element or gasket shall not permit the separation of the parts connected.
3. Flexible sealing elements or gaskets shall be of a type and material suitable for use with the hydraulic fluid furnished.

f. Where piping, fittings, and couplings supplied by the Contractor are contained within sleeves, conduit, trenches, troughs, or other passage means provided by others to allow for the connection of the power unit with the cylinder and plunger, the Contractor shall provide appropriate devices which shall effectively prevent the transmission of vibration to the surrounding structure.

g. The Contractor shall install all piping, fittings, and couplings used to connect the power drive to the cylinder and plunger in such a way that these may be removed and replaced at a future date. When Victaulic is used, there shall be access for inspection and maintenance. Destruction of portions of these items in the process of removal is acceptable but efforts shall be made in the designs to minimize the necessity to destroy items.

6. Valves

a. Valves shall be of the unitized manifold type with no more than four solenoids and arranged so that all adjustments are individually adjustable without the need for sequential readjustment. Valve shall be designed to ensure that oil flow will be controlled in a positive and gradual manner, thereby ensuring smooth starts, operation, and stops of the elevator car.

b. Valves shall be designed for quiet operation and shall be mounted above the storage tank in a manner that allows leakage to drain back to the tank.

c. A safety check valve shall be provided which will function to hold the elevator car with rated load at any point when the pump stops or the maintained pressure drops below the minimum operating pressure required holding the car in place.

d. A manually operated lowering valve shall be provided, which shall permit the manual lowering of the elevator car in the event of power failure. The location of the lowering valve and access to it shall be described in white stenciled lettering on the front panel of the pump unit. The lowering valve operating means shall be easily and readily accessible and unobstructed by the valve wiring, conduits or other equipment. A tank shut-off valve shall be provided to permit isolating the oil in the tank during maintenance operations. The location and orientation of the valve shall allow for safe operation of the handle throughout its range of travel.

e. All additional pump relief valves and other auxiliary valves required by the ASME Code or necessary to provide smooth, safe and satisfactory operation of the elevator shall be furnished and installed.

f. Any relief valves having exposed pressure adjustment shall have their adjustment sealed after being set to the correct pressure.

g. Manual shut-off valves shall be provided in the hydraulic oil line in the elevator pit and in the elevator machine room. In any portion of its travel, the machine room shutoff valve handle shall not intrude in the walk space or work space or obstruct access to other equipment.

7. Storage Tank

a. The storage tank shall be constructed of steel and shall be provided with a steel cover, protected vent opening, overflow connection and a valve drain connection. Tank shall act as a storage tank only. Suitable gauge glasses shall be provided if the top of the tank is over 4 feet above the floor. An initial supply of oil sufficient for proper operation of the elevator shall be provided. The tank shall have a capacity equal to the volume of oil required to lift the elevator to the top terminal plus a reserve of not less than 10 gallons.

b. The oil storage tank cover shall be arranged for easy unobstructed access. Clearance of 24 inches vertical and 18 inches horizontal from tank cover shall be maintained for ease of service.

c. The permissible minimum liquid level shall be clearly indicated. The manufacturer's recommendation of type of oil to be used shall be included in the written instruction for the care, adjustment, and maintenance of the equipment. The flash point of oil used shall be not less than 400 degrees F.

d. Provide an oil filtering system that removes contaminants that can clog valves and settle in the bottom of the tank.

8. Blowout-proof foil-hydraulic muffler of an approved make shall be furnished and installed in the oil line near the power unit to reduce noise to a minimum.

9. Oil Temperature Control/Tank Heater: Hydraulic oil viscosity/temperature control shall be provided by the application of an internally mounted, thermostatically controlled, tank heater. The oil temperature shall be maintained at a maximum 110 degrees Fahrenheit with the use of a 120 VAC powered tank heater. Unit shall be permanently mounted, integral with oil reservoir, and with a lighted switch/indicator to visually confirm unit is powered. Tank heater shall include the switch for disconnection of power during maintenance/repair operations. Unit shall be hard wired to electrical source per ASME A17.1.

10. Elevator Car Buffers: Heavy-duty spring buffers shall be provided, mounted on the supporting channel or block on the pit floor. The buffers shall comply with the requirements of the ASME Code. Buffer anchorage at pit floor shall be arranged to avoid damaging the waterproofing.

11. Car guides consist of a guide rail and guide-rollers. Guide rails for the elevator cars shall be of planed steel standard T-section. Guide rails shall be erected plumb and parallel with a maximum deviation of 1/8 inch and shall be securely fastened to the bracket or other supports by approved heavy rail clamps.

12. Car Roller Guides:

    a. The elevator car shall be provided with roller guides.

    b. Roller guides shall be spring-loaded and allow rail-to-rail and front-back adjustment of the rollers.

    c. Three or more rollers per guide and shall have 4-inch minimum sound-deadening wheels.

B. Operation:

1. Operation shall be automatic. Automatic operation by means of car and landing buttons. Stops registered by momentary actuation of car buttons to be made irrespective of number of buttons actuated or of sequence in which buttons are actuated.

2. Operating station in car containing bank of buttons numbered to correspond to landing served position indicators. EMERGENCY CALL button, keyed EMERGENCY STOP button, DOOR OPEN/DOOR CLOSE buttons, independent maintenance key switch, and key-operated light and fan switches, with legends as specified. Identification as specified for emergency telephone. Emergency call button connected to bell that serves as emergency signal. Panel finish: Stainless Steel.

3. Landing: Single push-button fixture at each terminal landing. Button fixture having push buttons with UP and DOWN legends at intermediate landing. Button identification as specified for Person with disabilities per latest ADA regulation (ADA rule 4.10.3).

4. Momentary pressure on car button or landing button illuminates that button, which remains illuminated until call is answered. Illuminated buttons serve as visual indication that call has been registered and that car will stop at that landing. The Push Buttons shall be flush, round, have a Metalized Halo and center jewel. The metalized halo shall be from differrent color and approved by ELES Engineer.

5. Stops, registered by momentary actuation of landing buttons. All stops subject to respective car or landing button being actuated sufficiently in advance of arrival of car at that landing to enable stop to be made. Direction of travel for idle car established by first car or landing button actuated.

6. UP landing calls answered while car is traveling in up direction and DOWN landing calls answered while car is traveling down, car reversing after uppermost or lowermost car or landing call has been answered and proceed to answer car calls and landing calls registered in opposite direction of travel.

7. Elevators to park at the secure landing level selected by the Engineer.

8. Push-button units to be Dupar US85 or approved equal with button identification as specified by latest ADA regulation.

9. Emergency-stop shall be key operated rather than push-pull arrangement with key removal only in off position.

10. All elevator car control panel operating devices shall be designated by Braille and by raised standard alphabet characters for letters, Arabic characters for numerals, and standard symbols as required by the Code and ADAAG.

11. Lettering shall have a highly visible coloring, such as white, that is permanently affixed.

12. Independent Service: Provide a key switch in the car operating panel which, when actuated, shall cancel previously registered car calls, disconnect the elevator from the hall buttons and allow operation from the car buttons only. Car door shall remain open unless closed fully by the door close button.

13. Two-Stop Collective Simplex Automatic Operation:
    The two-stop collective simplex automatic operation shall be used and checked for the following:
    a. System shall be designed so that when the car is standing at either terminal landing, pressure on car button for the other terminal shall automatically dispatch car to that landing. Pressure of landing button at either terminal landing shall call car automatically to that landing. If a landing call is registered while the car is making its trip, that call shall remain registered until the car responds to that call. If no car calls are registered car shall start automatically and respond to hall calls. Provide time limit relay arranged to hold car at landing at which it has stopped for predetermined time after car stops. After all car landing calls have been answered, car shall remain parked at landing where last used with car and hoistway doors closed until another call is registered. Pressing the landing button at floor at which car is parked shall automatically open car and hoistway doors. In all normal operations, the starting of the car shall be contingent upon establishment of hoistway door interlock and car door circuits.

b. Automatic dispatching operation: all two stop elevators shall include “Step-in-and-Go” feature. Calls for the opposite landing will be automatically set when the elevator opens its doors for a hall call. This feature shall be provided for all elevators that have public access for two stops (i.e., any elevators with key operated service landings will be included).

C Position Indicators:

1. Car indicator: In accordance with ADA requirements. Mounted in vertical row in car-operating panel to show position of car in hoistway by illumination of indicators corresponding to landing at which the car is stopped or passing. Finish for exposed-to-view metal components: Stainless Steel.

2. Landing indicator: In accordance with ADA requirements. Two-element direction-of-travel indicator mounted above call station or hoistway entrance as shown, including one red and one white indicator. Direction of car's operation shown by illumination of red indicator for DOWN and white indicator for UP.

3. In-car signals: Audible signal indicating car's direction of travel, signal sounding once for UP direction and twice for DOWN direction.

4. Landing signals: Audible signal at each hoistway entrance indicating car's direction of travel, signal sounding once for UP direction and twice for DOWN direction.

D. Lighting:

1. Machine Room Emergency Lighting: Emergency lighting shall be provided in each elevator machine room.

a. There shall be a minimum of one lighting fixture.

2. Car interior: LED fixture, 120-volt operation, with clear prismatic glass diffuser, flush mounted in ceiling, cool white bulbs. Illumination level shall be 15-foot candles minimum at car operating panel.

3. Car top and underside of car floor: Medium-base porcelain lamp receptacles, with wire lamp guards.

4. Car Emergency Lighting:

a. Fixture: Recess mounted, with stainless steel frame, location as shown.

b. Diffuser: Prismatic poiycarbonate plastic.

c. Lamps: Two, size 16-51

d. Remote power supply:

1) Power pack: Sealed gel cell battery with integral regulating charger and an alarm bell.

2) Capable of operating bell for one-hour minimum and light at car-operating panel at 0.2 low candles minimum for four hours minimum.

3) Location: in top of car or COP with easy access provided.

E. Inspection Operation: Key switch in car to nullify car and landing buttons permitting operation of elevator from top of car for inspection purposes:

1. Top of Car Inspection Station: The Inspection Station contains continuous pressure UP and DOWN buttons, emergency stop button and toggle switch to activate inspection devices. The device shall also have an 110v ac outlet for extension cord and provided with a light and guard.

F. Leveling: Automatic leveling device to stop car within 1/8 inch of landing level regardless of load or direction of travel. Landing level maintained within leveling zone irrespective of hoistway doors being open or closed.

G. Emergency Service:

1. Controls to return elevator to designated floor by means of key-operated switch outside street or ground floor hoistway entrance in compliance with ANSI/ASME A17.1.

2. In-car control during emergency operation by means of key switch in compliance with ANSI/ASME A17.1.

3. Terminals on elevators controllers for connection of circuit from heat and smoke sensing devices, with wiring from sensing devices to elevator controller.

H. Telephone Facilities:

1. Provide all audio/visual communication, signaling, and monitoring in accordance with ADA and ANSI. “Hands-free” phone integral with control panel, mounted in accordance with ADA requirements; having inscription EMERGENCY TELEPHONE as specified for Person with disabilities; finish exposed-to-view components to match stainless steel control panel; color of letters to contrast with panel.

a. Provide emergency communicators in accordance with ADA requirements to include auxiliary push button to summon help and visual feedback indicating that the call has been responded to.

2. Provide wiring and jacks for a portable self-contained battery-powered maintenance telephone system. Jacks shall be located on car top, inside car, and in machine room. Furnish three telephone instruments for use of maintenance personnel.

I. Electrical Equipment:

1. Electric equipment for elevator shall be designed, selected, and fabricated in accordance with NEC, NEMA, IEEE, ANSI Standards, applicable jurisdictional codes, and additional specified requirements. All equipment including motors, controllers, service cabinets, circuit breakers, switches, panelboards, indicators, lighting, wiring, conduit, boxes and other appurtenances for proper installation and operation of the elevator shall be furnished and installed by the Contractor.

2. Cable and wire for external circuits between the various items of elevator equipment, exclusive of the traveling cable, shall comply with the requirements specified below. The talk pair of the voice communications intercom system shall be shielded with 0.008-inch, minimum, copper shield.

   a. General Requirements for Single-Conductor and Multiple-Conductor Cable:

      1. Type and size: As shown or as required by code.

      2. Rated voltage: 600 volts.

      3. Conductors:

         a. ASTM B3 or ASTM B8 annealed copper

         b. Size 10 AWG and smaller: Solid or Class B or Class C stranded.

         c. Size 8 AWG and larger: Class B stranded.

         d. Other constructions as specified.

      4. Standards: Except as modified, wires and cable complying with the following:

         a. Cross-linked polyethylene (XLPE) insulated cable: NEMA WC 70.

         b. Other cable: NEMA WC 70.

      5. Nonmetallic jacket for single-conductor cable and individual conductors of multiple-conductor cable and as overall covering on multiple-conductor cable:

         a. Chlorosulfonated polyethylene, or cross-linked polyolefin.

         b. Cross-linked polyolefin complying with the following physical requirements.

      6. Properties tested in accordance with NEMA WC 70 if ethylene-propylene-rubber (EPR) insulation is used, or with NEMA WC 70 if cross-linked polyethylene insulation is used. Jacket material free of PVC and PVC-based compounds.

         a. Tensile strength, minimum pounds per square inch: 1,800.

         b. Elongation at rupture, minimum percent: 150.

         c. Aging requirement: After 168 hours in air oven test at 100EC, plus or minus one degree C:

            a) Tensile strength, minimum percentage of unaged value: 100.

            b) Elongation at rupture, minimum percentage of unaged value: 80.

d. Oil immersion: 18 hours at 121EC, plus or minus one degree C, ASTM D471, Table 1, No. 2 oil:

a) Tensile strength, minimum percentage of unaged value: 80.

b) Elongation at rupture, minimum percentage of unaged value: 80.

c) Jacket materials other than cross-linked polyolefin complying with NEMA WC 70. Jacket material free of PVC and PVC-based compounds.

e. Flame retardancy: Single-conductor and multiple-conductor cable demonstrating flame retardancy in accordance with the following:

a) Single-conductor cable and individual conductors of multiple-conductor cable passing vertical flame test in accordance with UL 1591 or NEMA WC 70. Cable size for testing: 14 AWG.

b) Single-conductor and individual conductors of multiple-conductor cable passing vertical tray flame test using ribbon gas burner in accordance with IEEE 1202.

c) Multiple-conductor cable passing vertical tray flame test, using ribbon gas burner in accordance with IEEE 1202.

f. Applied voltage testing:

a) Single-conductor cable and individual conductors of multiple-conductor cable to be given applied ac voltage dielectric strength test, i.e., six-hour water-immersion test.

b) For single conductors of multiple-conductor cable, conduct tests prior to assembly as multiple-conductor cable.

c) Test procedures:

(a) Polyethylene insulated conductors: In accordance with NEMA WC 70

(b) Other conductors: In accordance with NEMA WC 70.

b. Single-Conductor Cable:

1. Insulated with ethylene-propylene-rubber with non-metallic jacket or unjacketed filled cross-linked polyethylene. UL-labeled Type RHW or XHHW.

2. Color coding: In accordance with paragraphs 200-6, 200-7 and 210-5 of the NEC.

c. Multiple-Conductor Cable:

1. Individual conductors:

a. Number of conductors: As shown or as required by code.

b. Construction: Complying with one of the following:

a) Insulated with ethylene-propylene-rubber, with or without nonmetallic jacket as specified.

b) Insulated with composite compound of ethylene-propylene-rubber and polyethylene, UL Class EPCV, without outer jacket.

c) Insulated with filled cross-linked polyethylene without jacket.

c. Phase and neutral conductors: Individually insulated.

d. Neutral conductors: Same size as phase conductors.

e. Bare ground conductors: Sized in accordance with the NEC, unless otherwise shown.

f. UL-listed as Type RHW or XHHW.

2. Conductors assembled with non-wicking, flame-retardant filler to form cable of circular cross section.

3. Metallic-sheath: Provide one of the following

a. Continuous smooth aluminum sheath in accordance with NEMA WC 70.

b. Continuous corrugated aluminum sheath in accordance with NEMA WC 70.

c. Interlocked aluminum tape armor.

d. Multiple-conductor cable provided with overall nonmetallic jacket as specified.

e. Cable UL-listed as follows: Metallic-sheathed cable: Type MC, suitable for wet and dry locations.

4. Color coding:

a. Power cables: In accordance with paragraphs 200-6, 200-7 and 210-5 of the NEC.

b. Control cables: In accordance with NEMA WC 70

d. Fixture Wire: UL 62, with the following additional requirements:

1. Type: Suit temperature rating of lighting fixture, minimum 194EF.
2. Conductor: Stranded copper conductor 16 AWG or larger as shown.

e. Bare Conductor: ASTM B3 or B8, annealed copper conductor; 8 AWG and larger, class B stranded.

3. Traveling Cable

a. The elevator car traveling cable shall be type ETT conforming with the requirements of the NEC with minimum conductor sizes as specified in the NEC. Individual conductors in the cable shall have a distinctive color code for identification. Each traveling cable shall have one two-conductor stranded 18 AWG, twisted shielded pair for elevator intercom and a minimum of ten spare conductors. Traveling cable exceeding 100 feet in length shall have steel supporting fillers. Traveling cable 100 feet or less in length shall have steel or non-metallic fillers.

b. For surface elevators only, the traveling cable shall be provided in addition to the above requirements, with one RG-6u coaxial cable, and one two-conductor, twisted shielded pair, stranded 18 AWG power cable for CCTV camera.

4. Connector, Terminal Lugs and Fittings

a. In accordance with UL 486.

b. For 10 AWG and smaller conductor cable: Tin-plated copper pressure connectors with nonflammable, self-extinguishing insulation grip with temperature rating equal to that of conductor insulation.

c. For 8 AWG to 4/0 AWG conductor cable: Tin-plated copper compression connectors and terminal lugs with insulating sleeve or heat shrinkable insulator for insulation grip.

d. For multiple-conductor cable: Watertight aluminum fittings with stainless steel pressure ring and set screws or compression cone for grounding of aluminum sheath of Type MC cable.

e. Terminal lugs used for bonding connections to metallic structures shall be installed on bare/uncoated metallic surfaces to assure minimum contact resistance.

f. All wires shall run inside conduits. Wires and cables shall not be spliced inside or outside of conduit. Wire and cable shall only be connected at terminal strips or devices inside boxes, controller or approved enclosures.

5. Self-extinguishing nylon bundling straps having a temperature range of minus 65EF to plus 250EF shall be used for bundling or cabling of conductors where required. Strap shall have a hub complete with stainless steel locking barb on one end and a taper on the other.

6. Conduits and Fittings:

   a. Rigid conduit and fittings shall be UL-Listed rigid galvanized steel conforming to the requirements of UL 6 and ANSI C80.1. The minimum diameter shall be 3/4 inch for power circuits, one inch for fire and intrusion circuits, and two inches for audio and control circuits.

   b. Liquid-tight flexible conduit shall conform to the requirements of UL 360 and consist of a flexible galvanized steel core containing a copper bonding conductor spiral-wound between convolutions and a neoprene or PVC jacket overall. Fittings for liquid-tight flexible conduit shall be watertight and shall conform to the requirements of UL 514.

   c. All conduits (rigid steel and liquid tight flexible) should be permanently secured with metallic clamps. Zip ties are not acceptable to use as permanent use.

7. Auxiliary gutters, wireways, and raceways shall be constructed of galvanized sheet steel conforming to the requirements of the NEC and shall be UL-listed. Raceway, conduit and wireways within the hoistway exposed to public view shall be concealed within steel cladding.

8. Electrical Boxes:

   a. Outlet, junction and pull boxes shall be galvanized sheet steel or galvanized malleable iron, cast iron or ductile iron conforming to the requirements of UL 50, UL 514 and NEC paragraph 370-C. Pull boxes shall have screw cover with a liquid-tight gasket.

   b. Junction boxes on car bottom and hoistway connecting the traveling cable shall contain approved terminal blocks for connection of traveling cable conductors. Terminal blocks shall have indelible identification numbers for each terminal connection.

   c. All wire connection terminal blocks shall have the same identification number as labeled on the associated electrical wiring. All electrical wires shall use a labeling tube and heat shrink and match the terminal numbers.

   d. During field installation of junction boxes or control boxes, the contractor/subcontractor shall not drill or cut into the top sides of the box for wiring.

   e. All boxes shall be accessible without removal of other components.

   f. All boxes in machine room or pit shall be mounted on strut channels in order to prevent future corrosion and water damage. The strut channels shall be mounted on the wall and has a minimum of 1-1/2 inches thickness and 18 inches above the floor.

   g. All solid state and electrical components located on top of the car enclosure or in the hoistway shall be installed within NEMA 4X enclosures.

9. Disconnect Switches for Car Lights and Mainline Power

   a. Disconnect switches shall be the following: UL 98, NEMA KS 1, heavy-duty, quick-make/quick-break switching mechanism with operating handle external to enclosure, with positions labeled ON and OFF, defeatable interlock to prevent opening of enclosure door when switch is ON. Enclosures shall be NEMA 250 Type 4x. Label disconnect switches in accordance with the NEC.

   b. Mainline power disconnect switch shall be located in close proximity to the machine room entrance and shall be easily identifiable from other disconnect.

10. Circuit Breakers and Panelboards

   a. Circuit breakers shall be the following: NEMA AB 1, UL 489, molded-case, bolt-on quick-make/quick-break, mechanically trip-free switching mechanism, with thermal trip for inverse time delay overcurrent protection and magnetic trip for instantaneous short-circuit protection. Designed to carry continuous rating in ambient temperature of 40ºC.

   b. Panelboards shall be the following: UL 50, NEMA PB 1, latch and handle in accordance with UL 50, minimum side gutter size of four inches, bus bar of 98-percent-conductivity copper with contact surfaces silver-plated or tin-plated, rating of neutral and ground buses equal to phase bus rating, neutral bus mounted on insulated block, neutral and ground buses equipped with integral mechanical connectors, one-inch high engraved plastic nameplate with 2-inch high letters on black and attached with stainless steel fasteners. Enclosures shall be NEMA 250 Type 12.

11. Pit Receptacles and Lights

   a. Electrical power receptacles shall be furnished and installed in the elevator hoistway, pit, and top of car as shown or required by code. Each receptacle shall be duplex, ground fault interrupter type, resettable at the receptacle; waterproof; grounded; rated for 120 volts at 20 amperes.

   b. Maintenance lighting shall be furnished and installed in the elevator hoistway as shown or required by code. Lighting shall be vapor-tight service lights with quick start type PL compact fluorescent lamp. Furnish and install light switches; waterproof; grounded. The light switches shall be so located as to be accessible from the pit access door.

12. Drive Unit Motor

   a. Motor shall be designed specifically for elevator service. The drive motor shall be of the alternating current, intermittent duty, 120 starts per hour, 1.15 service factor, squirrel cage induction type design adapted to the severe requirements of elevator service. Elevator drive motor shall be single-speed. The motor shall be suitable for operation on a 480-volt, three-phase, 60-Hertz supply and capable of developing the required starting torque.

b. The motor shall be rated in accordance with NEMA Standard MG 1 for 60-minute rating motors and shall have sufficient capacity to operate the elevator with specified rated load at specified rated speed without overheating. The insulation and the starting and running torque of the motor shall be capable of permitting operation in accordance with NEMA MG 1. Standard factory motor test data and motor dimensions shall be submitted to the Contractor for approval. Each motor nameplate shall include the motor hp rating, voltage, full-load amperes, locked rotor amperes, full-load speed, design temperature rise, and NEMA design rating of the motor. Each motor shall be provided with ring or other suitable lifting means. The motor frame shall be tapped and drilled for a copper cable grounding connection.

c. Insulation of windings shall be NEMA Class B, fully impregnated and baked to prevent the absorption of moisture and oil. The insulation resistance between motor frame and windings shall be greater than one megohm.

d. Motor bearings shall be of the ball or roller type arranged for grease lubrication and fitted with grease gun connections and drain plugs or fitted with sealed-for-life bearings. The bearings shall incorporate dust-tight lubricant seals.

e. Motor shall be provided with an electronic soft start feature and thermal overload protection for each phase.

f. Connect motor and pump with multiple V-belt.

1. Belts and sheaves shall be sized for duty involved and designed to prevent any metallic contact between motor and pump shaft.

2. Furnish and install isolation units of rubber in shear to prevent transmission of pump and motor vibration to building.

3. Furnish and install expanded metal sheave guard that can be easily removed for servicing and inspection.

13. Elevator Controller:

1. An Allen Bradley (or ELES Engineering approved equal) PLC-based controller shall be provided, governing starting and stopping as well as preventing damage to the motor from overload or excessive current. It shall automatically cut off the motor current and bring the car to rest in the event any of the safety devices are activated.

a. System shall coordinate the functioning of elevator drive unit relative to actual location and status of elevator. It shall interface with door control and all required safety circuits, switches and devices. The controller shall be mounted in a NEMA 4X stainless steel air-conditioned cabinet within the controller room.

b. The diagnostic system shall be an integral part of the controller and provide user-friendly interaction between the service person and the controller system.

c. The supervisory logic shall be performed by a main controller or coordinated between the elevator controllers which will interface directly into the Allen Bradley DH485 (or ELES Engineering approved equal) protocol Remote Monitoring network, transmitting data from the elevator controller through a data concentrator to the Authority's AEMS RTU computer control and data system. The supervisory logic will coordinate dispatching assignments, interfacing operational demand data accumulated from car and corridor operating fixtures, selector and door control functions.

d. Controller shall be capable of operating with an operating temperature range of 32^0 F to 140^0 F with non-drip environment and no more than 90 percent relative humidity. However the air conditioner on controller cabinet shall maintain the operating temperature in range of 50^0 F to 90^0 F.

2. An Allen Bradley CompactLogix 1769-L32E (or ELES Engineering approved equal) based PLC control system shall be provided. (take to #1)

1) The exclusive Allen Bradley DH485 protocol data port will transmit data from the elevator controller to the station or facility data concentrator. The contractor shall provide a controller data interface to a DH 485 network. Contractor shall provide Data cables to connect from the PLC controller to data concentrator in the station and available for connection to the controller DH485 interface. The contractor shall pull Belden 9842, or ELES Engineering approved equal, cables to connect the controller into the monitoring DH485 network. The DH 485 controller interface shall be programmable for date rates up to 115 Kbps. The interface shall allow other nodes such as other elevators and escalators to be readily incorporated into the DH 485 network.

2) A data concentrator PLC shall be installed using an Allen Bradley MicroLogix 1400 or SLC5/05 PLC per station to function as data concentrated or to consolidate data from all controllers in the station. The software for the data concentrator shall receive controller data over the local monitoring DH 485 network and provide formatted data to the AEMS RTU through an RS232 link. The data concentrator shall provide an Ethernet port for interfacing with the WMATA wide area network. A data concentrator connection to the WMATA wide area network shall be provided.

4. The PLC shall accommodate the following Signal List, as Applicable, and provide data to the data concentrator as specified in specification.

5. The PLC CPU module shall store the last 99 faults, accessible via laptop connection, controller fault/status display and remote communications. The contractor shall provide WMATA with a programming and monitoring unit, such as a laptop computer with the newest version of Allen Bradley RS-Logix and any other software required to setup and program all electronic items in the control system, for each elevator, for the purpose of troubleshooting and remote monitoring modifications. The laptop should allow uploading, editing, and downloading any software that is being used on this elevator for any operation.

6. An Allen Bradley PanelView Plus 6, EZAutomation or ELES Engineering approved equal, fault/status display/interface shall be provided in the controller cabinet. Control system timers and other setup criteria shall be programmable through this unit. All fault, status and setup data shall be stored in the controller CPU module.

7. In cases where the programming is done by the supplier, the supplier shall provide a copy of all working programs, including labels for all inputs and outputs, data tables and internal logic points, on Flash Drives/CD-R disks as well as a printed program listing. The programs and setup data shall require a password for access and modification. The password shall be provided to ELES Engineering as part of the Submittal.

8. The main control of an elevator shall contain at least the following devices or electronic sensing: phase failure line voltage monitor, motor current and ground fault monitor.

9. The controller cabinet shall contain a permanently mounted fault indicator panel with LED indicator lights. Tripped safety devices, door position, door reversal, car running status, and control system status shall be indicated.

10. All terminals shall have identification markings and all wires, including field wires, shall be provided with permanent heat shrink sleeve cable markers. These wiring identifications shall be provided in the wiring diagram at each end of the circuit connections.

11. The controller shall be equipped with the AC vector drive installed in-line before the motor contactor and the motor.

12. The AC vector drive shall be capable of accelerating and decelerating the motor smoothly and gradually.

13. Adjustable settings for acceleration and deceleration ramps shall be provided.

14. The controller shall have, at least, one dedicated serial port for interface to the DH485 monitoring network and programming access without disconnecting any other port.

15. The Programmable Controller shall have, at least, one dedicated port to support the controller fault/status display.

16. The controller PLC shall provide the following Remote Monitoring and diagnostic network support:

    a) All applicable faults, statuses and data listed in Table 1 shall be provided

b) Fault indications shall remain until reset in the controller.
c) Status and analog data shall be provided for the duration of the condition.
d) Software in the controller PLC shall format monitoring data responses to data concentrator polling as specified in the specification.
e) The monitoring data port in the controller shall be setup for DH485 protocol with the port network identification number programmed for the particular elevator identification. For instance, identification number 11 applies to elevator 1, 12 to elevator 2, etc.
f) All faults, statuses and data shall be held by the controller CPU and sent from the CPU when polled by the data concentrator.

17. Provide sufficient non-volatile CPU memory, for non-volatile retention of program memory, system status and operating parameters.

18. Diagnostics

a) The processor shall have built-in diagnostics and self-test, such that each time power is cycled, the processor does a complete CPU and RAM memory test. Additionally the power-up test will momentarily light up all diagnostic LEDs to be sure they are working. A power up test will not be performed if the internal flag (bit) for Firemans Service Phase I is latched. The processor shall be capable of reporting major and minor fault codes and processor status information back to the data concentrator, provided the fault is not a catastrophic hardware failure where the processor is unable to power up.

b) The processor shall have a built-in watchdog timer to ensure that all processor program scans occur within the time limit set by the watchdog timer.

c) The processor shall have individual LED indicators that are clearly visible and labeled for easy identification. At a minimum the following indicators must be provided:

(1) CPU is in RUN mode

(2) CPU is FAULTED

(3) CPU battery is LOW

(4) I/O points are FORCED and are not under program control COMMUNICATION channels are active.

19. Input/Output Modules

a) The Input/Output modules shall be compatible with the PLC processor I/O structure. Each module shall be provided with a detachable terminal strip to connect wiring to the module. Each wire on the terminals shall be identified by the module terminal.

b) Discrete Input Modules: Suitable for the input voltage and compatible with the Allen Bradley system

c) Discrete Output Modules: Suitable for the voltage and load and

compatible with the Allen Bradley system.

d) Analog Input Modules: Converts analog signals to proportional twelve-bit binary values. The module shall accept 4 to 20 mA signals. Provide modules compatible with the Allen-Bradley system.

20. I/O Chassis and Power Supply

a) The controller chassis shall have an additional three spare modules.

b) Power supplies shall provide power to the PLC processors, I/O and other function modules. The power supply shall be suitable for operation of 120 VAC, single phase power. Power supply capacity shall be a minimum of 150% of the connected load.

21. Air Conditioning

Provide an independent air conditioning unit for each controller to maintain manufacturers' recommended operating temperatures. Condensate from the air conditioning unit must be piped to a suitable drain.

22. Selective Collective Operating: As defined by ASME A17.1 and shall be the pressure upon one or more car buttons to correspond to landings in the order in which the landings are reached by the car, irrespective of the sequence in which the buttons are pressed, provided the hoistway door interlock and car door switch circuits are completed. During this operation, the car shall also answer calls from the landings, which are in the prevailing direction of travel. Each landing call shall be canceled when answered

a. Momentary pressure on car button or landing button illuminates that button, which remains illuminated until call is answered. Illuminated buttons serve as visual indication that call has been registered and that car will stop at that landing.

b. Operation shall be automatic by means of the car and landing buttons. Stops registered by the momentary actuation of the car or landing buttons shall be made in the order in which the landings are reached in each direction of travel after the buttons have been actuated.

c. UP landing calls answered while car is traveling in up direction and DOWN landing calls answered while car is traveling down, car reversing after uppermost or lowermost car or landing call has been answered and proceed to answer car calls and landing calls registered in opposite direction of travel.

d. Should both an up and a down call be registered at an intermediate landing, only the call responding to the direction in which the car is traveling shall be canceled upon the stopping of the car at the landing.

23. Supervisory Control: A processor based system to coordinate dispatching assignments, interfacing operational demand data accumulated from car and corridor operating fixtures and other special feature commands issuing from computer processing, selector and door control functions. Incorporate in the system specific operational features as herein described.
    a. Allocate service to demand, make decisions to prevent crowding, save energy, and provide efficient coverage throughout the building. Respond in real time to prevailing traffic conditions as well at historical traffic patterns.
    b. Constantly compare passenger demand, car load, anticipated demand, car motion status, machine status and other prevailing conditions and evaluate this information in the context of the following dispatching approaches:
        1) Give priority to contiguous calls, assigning calls on adjacent floor to the same car if other criteria is satisfied.
        2) Give priority to coincident calls, having the same car let a riding passenger off and a waiting passenger on at the same floor.
        3) Anticipate demand based on hall calls and car calls already registered and floors with a high possibility of demand.
        4) Evaluate relative system response time for each car in the group, weighing all of the above factors.
        5) Allocate calls and position cars to minimize waiting time, response time and travel time. The other elevator shall respond for hall calls without any delay after the first elevator leaved the door zone.
        6) When there is a hall call registered and an elevator left the landing, the other elevator shall run toward opposite landing.
    c. Provide the capability to make both car to call or call to car assignments.
    d. During light traffic conditions, assign cars without demand to specific parking areas until requested for a hall call. Continuously evaluate dispatching assignment and immediately release a car from its assigned area to meet heavy demand elsewhere in the building.
    e. In determining relative system response time for a car to answer a hall call, factor in round-trip calculations for each car as well as other system parameters before deciding which car shall respond to a hall call.

24. Other Features:
    a. Independent Operation: Provide TWO-position keyed switch (ChicagoLock 7500) marked Independent Service, OFF and ON in the lower portion of the car operating panel of all cars. The switch shall be spring loaded type. When placed in ON position, car will be removed from the automatic operating system and will not respond to demands registered at the hall push buttons. It will respond only to floor with doors open until another demand is registered in the car. Demands registered at the landing will remain registered until answered by another elevator. The car only responds to car calls and that the doors remain open after a stop until closed by continuous pressure on the door close button.
    b. The controller shall be designed to operate automatically on standby power.
25. Control Room Two Way Communication Device: Provide within each controller/machine room a two way communication device that will interface with any type of ADA compliant telephone. The device shall be mounted directly on or within hands distance proximity to the elevator controller.
26. Any junction boxes installed in the machine room or hoistway shall be accessible for Maintenance.
    a. Drilling or opening top end of enclosure is not acceptable
    b. Wire nuts or splicing without terminal strips is prohibited.
    c. All openings shall be properly sized for the conduits.

J. Emergency Lowering

1. Provide a separate battery powered unit that senses loss of power and which shall operate as follows:
    a. Elevator automatically descends to bottom landing.
    b. Doors open automatically when car arrives at bottom landing and remain open until power is restored.
    c. Elevator shall remain inoperative until normal power is restored.
2. The system shall differentiate between actual power failure and manual operation of disconnect switch.
3. Failure protection (operational/power) battery shall be a 12 volt minimum, sealed, lead-acid, or approved alternative. The separate box shall be used for battery and not stored within the main controller.
    a. Unit shall be connected to a power source
    b. Unit shall automatically maintain the battery at its proper charge.
4. Provide a manual lowering valve to allow the car to return to the lowest landing. The manual lowering shall be easily accessible and reachable.
5. Provide all wiring, sensors and associated connections to the main line power and disconnect.

K. Elevator Hoistway Entrances and Doors

1. Doors of elevators shall be of the horizontal sliding type, single-speed, center-opening. All elevator door openings shall be a minimum of 42-inches wide per the Americans with Disabilities Act.

2. Entrance frames shall be of welded or bolted construction for complete one-piece unit assembly. All frames shall be securely fastened to fixing angles mounted in the hoistway and shall be type 316 stainless steel. Provide an additional type 316 stainless steel sill angle support. The landing sills shall be extruded stainless steel with a mill finish.

3. All materials and finished surfaces exposed to public view shall be stainless steel with embossed finish and/or glass panels as indicated on Contract drawings. Glass panels (if provided) to be completely flush with door assembly. In a glass hoistway the struts or any brackets should not be visible to public.

4. Fascia and Dust Cover in the hoistway shall be galvanized or type 316 stainless steel and extend at least the full width of door opening on each side. Toe guard shall be fastened to the sill at the lowest landing.

5. Hoistway doors are to be stainless steel and provided with keyways as required for operating mechanisms and door hangers. Provide glass panels that are completely flush with door, as indicated in A17.1. Each door panel shall have stainless steel bottom guides that run in landing sill slots. Guides shall be replaceable without removing door panels. All doors shall have fixed fire gibs.

6. Interlocks and Contacts:
   a. The doors at each hoistway entrance shall be equipped with approved hoistway door interlocks of the hoistway unit system type tested as required by the Code. Interlock shall prevent operation of the car away from a landing until doors are locked in the closed position. Interlock shall prevent doors from opening at any landing from the corridor side unless car is at rest at that landing, or is in the leveling zone and stopping at that landing.

   b. Provide key-operated hoistway door unlocking devices. A device shall conform to the requirements of the Code and shall permit authorized persons to open the hoistway doors from the landing when car is away from landing. The key for emergency use shall be mounted in a receptacle with a breakable transparent cover clearly marked in letter at least 1/8 inch high ELEVATOR DOOR KEY FOR FIRE DEPARTMENT AND EMERGENCY USE ONLY. The location of the receptacle shall be as directed by the Engineer.

7. Provide raised floor/level designations in characters and Braille on each jamb at 60 inches from floor to centerline. Characters shall be two inches high and in accordance with ADA requirements.

a. Sills shall be stainless steel and shall be supported on and attached to galvanized steel anchors securely fastened to the sill plate support. The sill and its assembly shall be capable of supporting 1260-pound service load for the transfer cart used by WMATA. Grooves for the door guides shall be machined with minimum clearance for the guides. The Contractor shall provide sill plates. Sill plates and all other sill support structure including shims and jack bolts shall be hot-dipped galvanized.

b. Struts and closer angles shall be hot-dipped galvanized structural steel angles of sufficient size to accommodate and support the hoistway door header plate. Angles shall be continuous and securely bolted to the sills and building beams or structure above.

8. Hanger supports shall be 1/8-inch minimum thickness formed sections securely bolted to the strut angles.

9. Fascia Plates: Galvanized Steel cladding reinforced to ensure a flat, even surface throughout, and shall be securely fastened to hanger supports and sills above.

10. Dust Covers: Galvanized or Stainless Steel cladding which shall extend over the hanger support the width of the jamb opening plus the jamb flanges, at the top landing for which fascia plates are not supplied.

11. Hanger cover plate sections above the door openings shall be arranged for opening or removal from within the car.

12. Sill guards: Sill guards (galvanized steel cladding) shall be supplied for the lowest landing. On glass hoistways, they shall extend the full width of the hoistway and to bottom of pit.

13. Door hangers and tracks shall be provided for each hoistway, sliding door sheave type, two-point suspension hangers and tracks, complete. Sheaves shall not be less than 2-1/4 inch diameter with ball bearings properly sealed to retain grease lubrication and shall be mounted on stands arranged for attaching to the doors by two capscrews. Hangers shall be equipped with adjustable ball bearing rollers to take the up--thrust of the doors.

14. The tracks shall be high-carbon steel or formed steel with nylon inserts, shaped to permit free movement of the sheaves.

15. All inside surfaces of doors shall have baked-enamel finish as shown on the finish schedule.

L. Elevator Components

1. The elevator car and car components shall conform to the requirements of the Code, and shall operate without squeaks or metallic sounds.

   Entire car assembly, including car frame and platform, shall be free from warps, buckles, and squeaks and rattles. Joints shall be lightproof.

2. Frame and Platform

   a. The car frame shall be constructed of structural steel members. The platform shall consist of a steel frame with necessary steel stringers all welded together. The frame and platform shall be braced and reinforced to prevent the transmission of strain to the elevator car. Steel framing shall conform to the requirements of ASTM A500, Grade B, modified to minimum yield strength if required. The variation in straightness of individual members and the frame as a whole shall not exceed 1/8 inch. Secondary straightening may be performed if necessary. The car enclosure shall be securely fastened to the car platform and so supported that it cannot loosen or become displaced during ordinary service, on the application of the car safety or on buffer engagement.

   b. Platform shall be provided with a steel floor designed for specified loading and sealed watertight. The platform shall be isolated from the cylinder by suitable rubber pads or other equally effective platen isolation.

   c. All structural steel in the frame and platform shall be hot-dipped galvanized.

3. Car enclosure walls shall be structural steel tubing with stainless steel cladding, in-filled with aluminum framed laminated fully tempered safety glass. Stainless steel cladding shall be #4 satin finish.

4. Railings and Handrails: Car handrails shall be 1/2 inch by 6 inch stainless steel #4 satin finished tube suitably mounted.

5. Car threshold shall be stainless steel with a non-slip surface.

6. Toe Guard Aprons:

   a. The toe guard apron (cladding) at entrance side of elevator cab shall be not less than 16 U.S. Standard Gauge (USSG) galvanized steel or stainless steel, and shall extend at least three inches beyond entrance jambs at each side. Toe guard shall have a straight vertical face, extending below the level of finished car floor, of not less than the depth of leveling zone plus three inches. The bottom of guard shall extend three inches below vertical face and be beveled at a 15-degree angle from the vertical. The toe guard shall be secured to car platform construction and be reinforced and braced to withstand a constant force of 150 pounds on its face without permanent deformation or deflection exceeding 1/4 inch.

   b. On glass elevators, the toe guard shall extend full width of cab.

7. Suspended Ceiling:

   a. The suspended ceiling shall be faced and edged with solid stainless steel panels, 0.075-inch thick with a fully adhered ¾-inch thick core of noncombustible, sound-absorbent material and backed with galvanized sheet steel. ASTM A653M, G90 coating or better.

b. Mounting brackets and any necessary holes for the CCTV camera shall be provided on the top of the ceiling, as further specified in Section A. Coordinate bracket configuration and location with the CCTV subcontractor.

c. Mounting brackets and any necessary holes for the smoke and fire detection sensors shall be provided on the top of the ceiling, as further specified. Coordinate bracket configuration and location with the fire and intrusion system subcontractor

8. Glass shall be laminated fully tempered safety glass conforming to ANSI Z97.1 and the requirements of Specification Section 08_81_00.

a. Glass shall be laminated. Heat-strengthened, safety glass conforming to requirements of ASTM C 1048 and ANSI Standard Z97.I and shall consist of two pieces of ¼ inch thick glass and a 0.060 inch thick polyvinyl butyryl interlayer, laminated together.

b. Color: Tint by Globe-Amerada Co., used as a standard of quality, or comparable and approved equal.

c. Weatherproof tape for field installation of final edge seating shall be compatible with the interlayer.

9. Dry Pressure Glazing Materials:

a. The setting blocks, edge blocks, and face gaskets shall be ozone-resistant, virgin neoprene.

b. Setting blocks for installation at each quarter point of the sill shall be 90 durometer, shore A hardness, approximately full channel width, four inches long, and high enough to afford correct cover and 3/8-inch edge clearance for the glass.

c. Edge blocks, for vertical installation at the bottom of each joint channel, shall be 50 durometer, shore. hardness approximately full channel width, three inches long, and provide 3/8-inch edge clearance for the glass.

d. Face gaskets shall be continuous, 50 durometer hardness, and provide 3/16-inch face clearance both inside and outside.

10. Sub floor material to be nominal ¼" stainless steel to prevent water infiltration between finished floor, cab and platform base.

Floor covering: Poured Acrylic Epoxy, polymer system or approved equal, color selection and samples to be submitted to the Authority for approval by the Engineer, with slip-resistant surface, ¼ inch thickness, covering elevator car floor area. Flooring shall be non-shrinking, manufactured of prime quality compound, free of calendaring and curing defects, resistant to grease, oil, chemicals, aging, and ozone. Flooring shall be poured incorporating a full membrane system for the entire cab floor width and depth.

11. Emergency exit: Car shall have a top emergency exit conforming to the requirement of the ASME Code, and the applicable jurisdictional requirements. The door shall open toward the top of elevator and shall have a latching mechanism to keep it in place.

12. Ventilation: A 350-cfm two-speed exhaust fan for continuous car ventilation shall be provided and located above the car ceiling or outside the enclosure.
    a. Ventilating fans shall be securely mounted in place.
    b. Ventilation openings shall comply with the ASME and local codes, and shall be suitably sized and distributed to provide uniform airflow within the car.
    c. Connect continuous ventilation fan to emergency power system. Provide battery backup for fan operation of at least 1 hour in the event of power loss.
    d. The exhaust fan shall be controlled from the car operating panel with Chicago Lock 7500 (similar to existing WMATA Elevators keys).
13. Cab air conditioning (if applicable), in addition to the exhaust fan, shall be installed as specified in the contract and shall be a self-contained, packaged design for easy mounting, maintenance, and replacement.
    a. Packaged air conditioners shall be installed on the top of the elevator car.
        1. If not installed in original scope, space provisions shall be made for future installation of packaged air conditioning units.
        2. Installation area shall be coordinated with electrical, structural, and other trades to ensure no interferences with current or future installation.
        3. Electrical power of the proper voltage and capacity shall be available for the air conditioning unit installation current or future.
14. Lighting Fixtures and Plug Receptacles:
    a. Car lighting shall provide a minimum of 15-foot candles measured at any point on the cab floor and shall of the LED type. Car lighting shall be provided with emergency battery backup upon failure or interruption of normal car lighting. Emergency lighting unit shall provide required lighting for a minimum of four (4) hours. Battery charger shall be capable of restoring battery to full charge within sixteen (16) hours after resumption of normal power.
    b. Exterior car lighting shall be as specified. On glass-enclosed elevators they shall be concealed under access panels flush with cab top or bottom surfaces, respectively. A duplex plug receptacle shall be provided in the pit and on top and bottom of each car. The lighting fixtures and receptacles on exterior of car shall be controlled by a switch adjacent to each fixture.

c. Provide 115 volt ac plug receptacle (GFCI) within 12 inches of CCTV camera location. Coordinate the installation of CCTV equipment within the design of the elevator cab as the elevator contractor is responsible for the installation of the camera and wiring to the control room.

15. Car Doors and Door Equipment:

a. Car doors and door frames shall be suitably reinforced and provided with a laminated stainless steel #4 finish on cab side and baked enamel finish on hoistway side. Doors shall protect the full width and height of car entrance opening when in the fully closed position. Car door frame shall be integral with front wall of cab.

b. Hanger cover plate sections above the door opening shall be removable from the hoistway. Doors shall be guided at the bottom by composition gibs engaging threshold grooves with minimum clearance.

c. Car/Hoistway Door Operator: Car and hoistway doors at each landing shall be opened and closed quietly and smoothly by a direct current electric operator.

d. Door operation automatic at each landing with door opening being initiated as car arrives at landing and closing taking place after expiration of specified time interval, with electric contact to prevent starting elevator away from landing unless car door is in its fully closed position.

1. Time door closing to start 5 seconds minimum from notification that car is answering landing call.
2. Time doors to remain open five seconds minimum.
3. Time shall be adjustable to 20 seconds.
4. The interval of time that the doors remain open at intermediate landings shall be less for a stop made in response to a landing call. Door open time at a dispatching terminal shall be longer than the time for a stop in response to an intermediate landing call.
5. All door timers shall be adjustable from the controller display panel.

16. Capacity Plate:

a. The car capacity plate shall be of plain stainless steel and, in addition to data required by the ASME Code, but shall not bear the name of elevator manufacturer.

17. Door Operator Equipment:

a. Provide a water resistant heavy-duty GAL MOVFR or ELES Engineering approved equal door operator with encoderless VVVF drive. Closed loop door operator designed to operate car and hoistway doors simultaneously at the speed specified. Door shall open automatically when car stops at landing to discharge

passengers or to answer valid calls and close automatically after predetermined time interval has elapsed. The doors shall be capable of smooth and quiet operation without slam or shock. Door operator to have the following features::

1. ½ hp motor and heavy-duty sprocket, chain, belt, and sheaves.
2. Closed loop regulated speed performance.
3. Hand-held keypad programming.
4. Adjustments can be stored in the keypad and downloaded to another operator.
5. Adjustable door obstruction reversal.
6. Optical cams with LED indicators.
7. Test switches for open, close, nudging and speed zone set up.
8. Universal inputs for open, close, and nudging.
9. Reversing switch to back up the door reversal device.
10. Designed for interior and exterior applications.

b. Provide a non-contact door reversal device with light immunity: The Door Reopening Device shall cause both the car and hoistway doors to reverse, should they detect an obstruction in the elevator entrance. The device electrical wiring shall be supplied with quick disconnects terminals to facilitate replacement. The infrared curtain detector shall include the following:

a. A protective infrared detector field extending from 1 1/2” above the car sill to a height of 68”.

b. A fail-safe control system to prevent the doors from closing in case of power loss to the detector.

c. A one-piece full door height protective lens cover designed to be completely waterproof and to withstand impact, abrasion and vandalism.

M. Normal and final terminal stopping devices shall be provided for elevator conforming to the ASME Code requirements.

1. Final terminal stopping devices, located in hoistway or on the car and operated by cams, shall be fitted with rollers having a rubber or other approved composition tread to provide silent operation when actuated by the cam.
2. Normal terminal stopping device may be mounted in hoistway, on top of the car, or in the machine room.

N. Signal Devices and Fixtures:

1) Car Operating Station:

a. Provide one (1) main station in the front and one (1) auxiliary station. The COP shall be a vertical type.

b. General: Provide signal fixtures and control devices for each elevator. Buttons and signals shall be tamper resistant of the illuminated type that light-up when activated and remain lit until call or other function has been fulfilled. All signal fixture and control device faceplates shall be of Type 316L, nominal 0.135 inch thick stainless steel with No. 4 finish, unless otherwise shown on the Contract Drawings.

c. Car operating stations shall contain Braille plates adjacent to each call button. Contractor to coordinate proper landing call outs based on maximum characters as indicated on Contract drawings. Buttons for DOOR-OPEN, DOOR-CLOSE, ALARM, EMERGENCY PHONE call functions are to be supplied. Buttons are to be vandal resistant and of the positive stop type.

d. Station shall have a locked service cabinet for keyed switches of the car light; exhaust fan, independent operation, GFI duplex outlet as indicated on the Contract drawings.

e. Provide Emergency Communication: “Hands-free” ADA compliant telephone/intercom.

2) Hall Station: Riser of hall stations of the push-button, call acknowledging, stainless steel, tamper resistant type shall be mounted at all elevator landings. Highest landing shall have a single DOWN button. Lowest landing shall have a single UP button. Incorporate ADA compliant telephone with each hall station. Braille Indicator Plate shall be provided. Faceplate finish shall be Type 316L stainless steel #4 finish. The Hall Station shall be flush to the surface and shall not be projected out.

3) Hall Lanterns:

a. Tamper resistant hall lanterns shall be equipped with illuminated (LED type) UP and DOWN signal arrows, but provide single arrow where only one direction is possible. Provided units projecting from faceplate for ease of angular viewing. Match materials, finishes and mounting method with hall stations.

b. In conjunction with each hall lantern, provide an adjustable electronic chime signal to indicate that a car is arriving in response to a hall call and to indicate direction of car travel. Signal shall sound one for up direction of travel and twice for down direction.

4) Bell Alarm System: Bell alarm system for each elevator shall be properly located within building and audible outside hoistway when activated by the EMERGENCY ALARM call button on each car control building/station. When emergency stop switch is activated inside fire service box, the bell alarm system should not be activated.

5) Firefighters' Service System: Firefighters' service system shall be provided in compliance with code requirements.

O. Drip pans constructed of 26 USSG galvanized sheet steel shall be provided below all bearings to catch lubricant drippings, except for bearings that are fitted with effective approved grease seals.

P. Metal parts visible to the public shall be field painted.

Q. A metal cabinet of suitable size shall be provided in each machine room for the storage of special tools and necessary spare parts. The cabinet shall be mounted on legs or a pedestal, a minimum of 4 inches off the floor. A Mobile Tool Storage Cabinet with wheels is not allowed.

R. A complete set of special tools or wrenches that are designed specifically for tasks associated with elevator inspection, maintenance and repair shall be provided with a case or suitably mounted in the storage cabinet.

S. At the expiration of the warranty requirements, the Contractor shall provide a spare parts and service facility in the United States at no additional cost to the Authority from which all manufactured parts and components of the equipment furnished and installed can be obtained for an additional three years.

2.04 KIOSK SURVEILLANCE CONTROL AND COMMUNICATION:

A. Surveillance Camera Provisions (Surface Elevators). All requirements for CCTV shall comply with the WMATA SMNT Department.

1. Space provisions and mounting holes shall be provided for closed-circuit television (CCTV) cameras to be furnished and install by CCTV subcontractor.

a. The Contractor shall coordinate with the CCTV subcontractor and install wiring from the CCTV location within the elevator cab to an interface terminal and video transmitter located on the elevator car. Final equipment selection has not been performed and is subject to change. Coordinate model, configuration, and location with the CCTV subcontractor.

1) Power will be required by the video transmitter and CCTV camera and shall be provided.

2) Equipment: Fiber Optic Video Transmitters (Elevator Cameras)

b. The Contractor shall work with the CCTV subcontractor to install CCTV subcontractor-provided fiber-optic cable and transmitter to a terminal location specified by the CCTV subcontractor. The Contractor shall tag the cables appropriately, indicating that they are for future use by others.

B. Supply the following status indication, control, and communication functions for each elevator car and landing at an annunciator panel in the kiosk: indication, control, and communication functions in each elevator and landing; and all interconnecting wiring required to provide a complete and operable system. Systems to be provided and installed include the following:

1. Kiosk annunciator panel: Panel shall be a single panel approximately 7-½ by 19 inches. Coordinate design to ensure that the panel is compatible with the mounting provisions, previous designs, and human factors. The panels shall contain:
   a. Indicators:
      1) Visual display of elevator car status, to include landing stopped at or being approached and direction of travel:
         a) Designate elevator by functional name, e.g., Garage 1.
         b) For garage elevators designate landing by garage floor level.
      2) Out of service because of malfunction.
      3) In-Car stop switch is actuated.
      4) Continuous audible alarm activated when emergency alarm switch in car is anitiated.
      5) Indicator lamps shall be LEDs, with life expectancy of 50,000 average rated hours.
   b. Controls:
      1) Out of service.
      2) Override control.
      3) Door open.
      4) Landing selection.
      5) Push button switches shall have limited over-travel to prevent damage due to abuse and shall be equipped with lift-up covers to avoid inadvertent operation, have mechanical and electrical life of 25,000 cycles, with integral or isolated illumination circuit and be normally open with momentary action or alternate action circuitry.
      6) When the override control switch is OFF, the kiosk controls shall function in parallel with the car and landing controls, i.e., the selective/collective control system shall respond to a kiosk-initiated landing selection with the normal priority afforded the remaining system landing selection and call buttons.
      7) When the override control switch is ON, the following actions shall take place:
         a) If the car is stationary at a landing, it shall remain at the landing and the doors, if open, shall close and remain closed.

b) If the car is in motion, it shall stop at the first landing reached and the doors shall remain closed.
c) The elevator control system shall then respond only to the kiosk controls and car staton.
d) The car shall park at the designate landing.

8) When the OUT OF SERVICE switch is actuated, the elevator shall return to the lowest landing before shutting off.

2. Elevator fire detection sensor: Provide space and mounting holes for smoke and fire detection sensors to be furnished and installed as required by building, electrical, elevator and local codes. Install wiring from the sensor location in the car to interface terminal cabinet in the machine room, for connection from the sensors to the smoke and fire detection system. Coordinate with installers to allow installation of sensors and operational checkout of the system.

3. Passenger - Kiosk communications (VIOP) system:

a. Communications signal button in elevator car momentary contact to illuminate back-lighted signal button in car and latch on a continuous audible signal and illuminated indicator in the kiosk.

b. Communications buttons at landings, momentary contact, to illuminate back lighted signal button at the landing and latch on a continuous audible signal and illuminated indicator in the kiosk.

c. Push button in kiosk to activate intercom system and reset indicator lamps and audible alarm.

d. Each passenger operated device shall have identification markings as specified for car operating devices.

e. The voice communication intercom system shall function as a master remote network. The master station shall be located in the kiosk annunciator panel and shall include a speaker-microphone, audio amplifier, on-off indicator lamp, audible signal device control and push button lamp for the operations. A remote station shall include a speaker-microphone and a communications signal button shall light the signal button and cause a continuous audible signal at the master station and light indicator lamp corresponding to the calling remote station. Communications between master and remote station shall be established upon the actuation of the master station push-button control corresponding to the calling remote station with the master station push to talk control determining the direction of transmission.

f. If successive calls are received from other remote stations while communication is in progress with one remote station, the audible signal shall sound the indicator lamps corresponding to the calling remote stations shall light and both shall remain on the indicate waiting calls.

g. Means shall be provided to clear the indicating lamps independently. Communication initiated from the master station shall be established upon actuation of the push button control corresponding to the called remote station, with the master station push-to-talk control determining the direction of transmission.

h. The audio amplifier at the master station shall be all solid state in construction and shall control incoming and outgoing volumes for all of the remote stations. The volume levels shall be preset during installation and shall be adjustable to provide a maximum of five watts rms at the speaker-microphones.

i. The power supply shall supply all ac and dc voltages necessary for all circuitry associated with the voice communications intercom system, and shall operate from the 120-volt ac, 60 Hertz emergency power supply located in the elevator machine room.

j. The audio amplifier and the speaker-microphones shall have a frequency response of plus or minus three Db from 300 Hertz to 5,000 Hertz. Power consumption shall be 5 watts maximum in standby and 50 watts maximum under load.

k. The Contractor shall be responsible for shielding, grounding and other measures necessary to protect the voice communications intercom system from interference from other electrical systems.

l. Speaker grilles shall have a minimum of 35 percent open area over the entire surface of the speaker cone.

m. Switches and relays used with this system shall have an operating life exceeding 5,000,000 cycles. Documentation shall be provided by the Contractor to the Engineer, for his approval, to substantiate this life cycle level.

n. The system shall perform adequately, as approved by the Engineer, with both the remote and the master station test personnel speaking from three feet away from the speaker-microphones.

o. Communication in the car shall also rollover to a 24-hour manned site (Rail Operations Control Center) in the event that the kiosk does not respond to the call.

p. Each passenger-operated device shall be identified in accordance with ADA/ADAAG requirements.

1. ADA requirement for providing emergency two-way communications between an elevator and a point outside the hoist way (the Kiosk).

2. Device mounting heights shall comply with:

a. ADAAG requirements.

b. ASME A17.1-2007. The highest operable part of the two-way communication system shall be a maximum of 48 inches from the floor.

3. A Braille Instruction Plate shall be permanently affixed on each remote intercom unit.
   a. ADA Standards: Raised symbol and lettering (Signage) located adjacent to the device.

PART 3 – EXECUTION

3.01 EXAMINATION

A. Prior to beginning installation of elevator equipment, examine the following and verify that no irregularities exist that would affect quality or execution of work as specified.
   1. Hoistway size and plumbness.
   2. Sill pockets.
   3. Anchor brackets
   4. Sill supports.
   5. Spreader/Divided beams.
   6. Machine beams and any other supplied by others.
   7. Pit Depth
   8. Overhead clearance

B. Do not proceed with installation until previous work conforms to project requirements.

3.02 INSTALLATION

A. Electrical Installation:
   1. The Contractor shall install all raceways and wiring necessary for the proper connection and operation of all equipment. The installation shall comply with the applicable requirements of the NEC and local codes.
   2. Raceway:
      a. Rigid conduit connecting the various items of elevator equipment and electrical boxes in the machine room and hoistway shall be run parallel to the ceilings and walls. Metal wireway and auxiliary gutters in the machine room shall run exposed in readily accessible locations and shall not protrude into the working space around equipment.
      b. Liquid-tight flexible conduit shall be used for connections to motor, limit switch, interlock push-button box, door operator motor, and similar devices. A length of liquid-tight flexible conduit 18 to 24 inches long shall be used for connection to the elevator drive motor.
      c. Raceway terminal fittings shall be free from burrs, shoulders, or other projections that will reduce internal passage area or cause abrasion of conductors.
      d. Electrical boxes shall be installed in accordance with the requirements of NEC paragraph 370.

3. Wiring:

   a. All wiring shall be run in conduit, metal wireway, or auxiliary gutter, with the following exceptions:

      1. Flexible hard-service cord, type SO, used between fixed car wiring and switches on car doors.

      2. The traveling cable connection to the elevator car.

   b. Wire and cable shall be sized for their respective duty so that the maximum current carried shall not exceed limits prescribed by the NEC and local codes. The minimum sizes of conductor shall be 12 AWG for lighting and receptacle circuits and 16 AWG for operating, control and signal circuits, except for traveling cable, where 14 AWG shall be the minimum size for elevator lighting circuit conductors.

   c. In glass hoistways, wiring shall be installed only in the locations shown with the requirement that wiring and conduit be hidden from public view.

   d. The traveling cable shall run from a junction box on the bottom of car to a junction box approximately midway in the hoistway. The cable shall be anchored and suspended to minimize any strain on individual cable conductors. The cable shall be free from contact with the hoistway construction, car, or other equipment. The overall covering of cable shall remain intact between junction boxes. The Contractor shall ensure that the cable shall not bend to a radius less than 12 times the outer diameter at any position of elevator travel.

   e. Traveling cable shall be suspended by the wire rope center or self-gripping devices where cable weight will not cause excessive crushing forces.

4. Splices and terminations of conductors shall be made only in outlet, junction. Splices in conduit or raceways will not be permitted. Splices and terminal connections shall be made only by means of solderless connectors and terminal lugs as specified. Splices shall be covered with electrical insulating tape to an insulation level equivalent to that of the conductors. Terminal lugs used for bonding connections to metallic structures shall be installed on bare/uncoated metallic surfaces to assure minimum contact resistance.

5. Grounding:

   a. The Contractor shall be responsible for grounding and bonding all parts of the elevator metallic structure, equipment and raceway in accordance with the applicable requirements of the NEC and the codes and regulations of the jurisdictional authorities. An equipment grounding conductor will be furnished and installed by other trades in each feeder to the elevator machine room and terminated in a disconnect device or junction box.

b. The Contractor shall provide equipment grounding conductors from the disconnect devices or junction boxes for all feeders and branch circuits as shown and required. Electrical equipment shall be provided with a minimum of two ground paths. One path shall be a green insulated equipment grounding conductor. The second path shall be a connection to grounded metallic structure using metallic fasteners, metallic conduit and/or bonding jumper. In elevator car, bond exposed metallic structures, ac equipment enclosures and lighting fixtures to grounded elevator metallic structure with metallic fasteners as shown.

6. Each device, each terminal, and each wire on the controller panels shall be properly identified by name, letter, or standard symbol in an approved indelible manner, on the device, panel, or wire. The identification markings shall be identical to markings used on the wiring diagrams.

B. Machine Room Equipment:

Machine room shall be 224 sq.ft minimum.

1. Machine Room Emergency Lighting: Maintained Emergency lighting fittings shall be provided in each elevator machine room.
   a. There shall be a minimum of one maintained lighting fixture.

2. Clearance around equipment in each machine room shall comply with provisions of all applicable codes. Clear distance for the maintenance purposes shall be at least 18”. In no case shall this clearance supersede minimum Code requirements.

3. Equipment in elevator machine room shall be so arranged that replaceable items can be removed for repair or replacement either by overhead hoist and dolly, or other conventional means, without dismantling or removing other equipment components in the same machine room.

5. Machine rooms must be air conditioned and heated to maintain an ambient temperature of 50^0 F to 90^0 F degrees and a relative humidity between 35% and 50%. The Air Conditioner shall be Split System. The heating system for the machine room is also a built in system. A forced removal should be done by moving the air from the room to the outside of the building to another part of the building to keep an air exchange through the equipment room. Intake and exhaust vent should not be located close to each other.

6. Any component attached to the controller shall have a minimum clearance of 18 inches from the side(s) of the component requiring access for maintenance and free air circulation.

7. One set of approved electrical and hydraulic diagrams of elevator shall be mounted in an aluminum channel frame with lucite cover and waterproof fiberglass backing and installed adjacent to the appropriate drive machine.

8. Provide Mats of insulating rubber or other suitable floor insulation in the front of the Controllers.
    a. The Resistance range shall be $1x10^4<1x10^6$ and shall meet ANSI/ESD requirements.
    b. The rubber mat shall be the width of the controller plus 12".
    c. The length of rubber mat shall be a minimum of 24".
    d. The rubber mat shall be a ¼" thickness and beveled at each end.

C. Hydraulic Elevator Cylinder

1. The Contractor shall set the hydraulic elevator cylinders true and plumb

    a. Dielectric Insulation Installation

        1. Each cylinder shall be electrically isolated from the building steel and other earth ground sources

        2. The following are minimum requirements:

            a. Install an insulating gasket between the platen plate and floor of the elevator cab. Use insulating sleeves and washers on the bolts.

            b. Use insulating pads to insulate the cylinder support members (channels) from the guide rails and other structures at ground potential.

            c. Use insulating sleeves and washers on the bolts that connect the cylinder to the support channels.

            d. Install an insulating coupling on the oil supply line between the pump and cylinder, located as close to the cylinder as possible.

2. Insulating gaskets shall be installed in the same manner as a normal gasket.

    a. Sleeves shall not be forced through misaligned bolt holes. Where misalignment occurs, the holes shall be reamed true, and all metal, chips shall be carefully removed.

    b. The sleeves shall extend into the plastic washer on both sides of the flange. Any sleeves or washer cracked during installation shall be replaced immediately.

    c. After making up the flange, the resistance of each bolt to the flange shall be tested using a 500-volt megohmmeter. If the resistance of any bolt is less than 50 megohms, the sleeve and washer shall be checked and changed, if necessary, to provide the required resistance.

3.03 DEMONSTRATION

A. Acceptance Tests:

1. The Contractor shall submit an operational test plan to the Authority for approval. When each elevator, furnished, installed, and tested, is ready to be placed in interim service, the Contractor, at no additional cost to the Authority, shall perform operational tests described below. The Authority shall be notified at least 48 hours prior to each scheduled test so that arrangements can be made for the presence of appropriate personnel to witness the tests. Acceptance Tests and inspections will be based upon the elevator meeting the requirements of the Specification and as evidenced by the operational test shall be witnessed by WMATA representative.

B. Elevator Tests

1. When the elevator work is fully completed, the Contractor shall demonstrate to the satisfaction of the Authority and Authorities Having Jurisdiction that the proper operation of every part of the equipment complies with all applicable requirements including the ASME Code.

   a. The inspection procedure outlined in the ASME A17.2 will form a part of the final inspection.

   b. No shop test of elevator motor and no certified test sheets will be required.

   c. The heating, insulation and resistance of the motors will be determined under actual conditions after installation.

2. The Elevator Contractor shall furnish all test instruments and materials, required at the time of final inspection, to determine compliance of the work with the Contract requirements. Materials and instruments furnished shall include standard 50-pound test weights, megohmmeter, voltmeter and ammeter, Centigrade calibrated thermometers, spirit level, and stop watch. At the time of final inspection, tests shall include, but not be limited to, the following:

   a. After installation, each elevator shall be tested without load by the Contractor. The elevator shall be subjected to a test for a period of eight-hours continuous run. During the test run, the car shall be stopped at top and bottom levels, in both directions of travel with a standing period of 10 seconds at each landing.

   b. Full-Load Run Test

      1. The elevator shall be subjected to a test for a period of one-hours continuous run, with full specified rated load in the car. During the test run, the car shall be stopped at top and bottom levels, in both directions of travel with a standing period of 10 seconds at each landing.

   c. Speed Test

      1. The actual speed of the elevator car shall be determined in both directions of travel, with full specified rated load and with no load in the elevator car.

2. Speed tests shall be made before and after the full-load run test.
3. For hydraulic elevators, speed shall be determined with a temporarily mounted tachometer on the guide rail or stop.
4. Car speed when ascending shall be not more than 10 percent above not more than 10 percent below the specified car speed.
5. Car speed when descending shall be not more than 25 percent above not more than 10 percent below the specified car speed.

d. Temperature Rise Test

1. The temperature rise of the drive unit motor shall be determined during the full-load test run. Temperatures shall be measured as specified in NEMA and IEEE Standards. Under these conditions the temperature rise of the motor shall not exceed NEMA and IEEE specified temperature rise. Test shall be started only when all parts of equipment are within 9 degrees Fahrenheit of the ambient temperature at time of starting test.

e. Car Leveling Test

1. Elevator car leveling devices shall be tested for ¼-inch accuracy of landing at all floors with no load in car and with full load in car, in both directions of travel.
2. One re-level operation is permitted when full load is in the car.
3. Accuracy of floor leveling shall be determined both before and after the full-load run test.

f. Insulation Resistance Test

1. The complete wiring system of elevator shall be free from short circuits and accidental grounds. The insulation resistance of the system shall be more than one megohm when tested by using a 500-volt megohmmeter. The elevator structure, equipment, and raceway shall be tested for continuity to ground.

3.04 ELEVATOR PROTECTION

1. The finished elevator installations shall be completely barricaded and enclosed to preclude their use without permission of the Contractor until Final Acceptance and release by the Contractor for general use. The enclosure shall be fabricated to allow easy access for maintenance, testing and adjustment.

2. The Contractor shall be responsible for the security of the contents of each machine room. The Contractor shall control access to that room, and ensure that it shall remain secure at all times until the completion of the Contractor's interim maintenance obligation.

3. Protection: During installation and until all elevator systems are fully operational and accepted by WMATA, make all necessary provisions to protect all elevator components from damage, deterioration, and adverse environmental conditions. Do not use or allow the use of the elevator for construction purposes such as hauling materials or worker transport during construction.

4. Security Of Machine Rooms: The Contractor shall be responsible for the security of the contents of each machine room. The Contractor shall control access to that room and ensure it shall remain locked and secure at all times.

5. Field Painting:
   A. The pit, pit walls and machine room floor shall be painted. All machine room equipment shall be given two coats of approved machinery paint. All new iron work shall be given one coat of rust-inhibiting paint.
   B. Metal parts visible to the public shall be field painted where specifically shown or authorized by the Authority.

3.05 MAINTENANCE

The Contractor shall perform full maintenance service for a period of two years on each elevator in accordance with the manufacturer's maintenance manual and WMATA ELES maintenance program prior to WMATA providing permanent maintenance. The period of maintenance shall begin after test(s) and Provisional Acceptance of each elevator and shall extend to the scheduled date of Final Acceptance for all units in the same facility plus a period of two years. In no case shall the interval between inspections and testing be greater than one month. The maintenance service during the warranty period shall be provided by fully trained elevator mechanics. The maintenance tasks shall include, but not be limited to, the following:

a. Inspection of completed installation and periodic testing tomaintain the elevators in completely operable condition.

b. Contractor shall provide support for periodic, accident and incident, PM compliance inspections.

c. Lubrication of parts, and the protection of the equipment.

d. Replacement of defective parts at no additional cost to the Authority.

e. Annual clean down of the elevator and hoistway enclosure is required. Make necessary arrangements with Authority in order to minimize any inconvenience.

f. Contractors performing maintenance are responsible for all service, repair work and emergency call. The contractors shall provide unlimited service during revenue hours and twenty-four (24) hour

(including Holidays) emergency call back service at no additional cost.

1) Provide twenty (24) hour (including Holidays) emergency service during the maintenance period consisting of a prompt response (within 1 hour) to emergency request by telephone or otherwise from Authority or designated representative if an elevator is inoperable or in case of injury, entrapment, or potential injury to persons.

2) Unlimited service callbacks are included with a required response time of one (1) hour (including Holidays). .

g. Periodic maintenance (based on WMATA schedule) shall be performed off peak hours to minimize service interruption as long as the other elevator serving the same plateform is operational.

h. Reporting: Detailed monthly records of tasks performed including names of individuals performing the tasks, date and time performed, and other pertinent data. In addition, the reports are to be provided in an electronic format acceptable to WMATA's needs.

i. Contractor performed maintenance shall follow the WMATA Office of Elevator and Escalator Operations procedures, schedules and check charts.

Within three (3) months prior to the termination of this contract, the Authority or his designated representative(s) shall make a thorough maintenance inspection of all equipment covered under this contract. The contractor shall provide personnel to remove, test, and operate equipment as necessary. All deficiencies found as a result of this inspection shall be corrected by the Contractor as required in this agreement with no additional cost for the Authority.

3.06 REMOTE MONITORING SPECIFICATIONS:

A. Allen Bradley DF1 or ELES Engineering approved equal or industry standard Modbus protocol shall be provided to transmit data from the Elevator/Escaator controller to the Authority's AEMS RTU computer control and data system. The Design-Builder shall provide a controller data interface to a DH-485 network located in the Elevator /Escalator machine room. The DH-485 controller interface shall be programmable for data rates up to 115Kbps. The interface shall allow other nodes such as other Elevator or Escalators to be readily incorporated into the DH-485 network. The controller data interface shall include one Allen Bradley SLC PLC per station to function as a data concentrator to consolidate data from all the controllers in the station. The software for the data concentrator shall be as specified by the Authority. The data concentrator shall receive controller data over the DH-485 data network and provide formatted data to the AEMS RTU through a RS 232 link. This data transmission may be accomplished by a separate PLC controller integrated into the control system.

B. The Elevator /Escalator control system shall automatically initiate the transmittal of data when data is requested by the Authority's AEMS system and continue until all data is received by the AEMS RTU in the station AC switchboard room. The Authority will perform final integration of the data in the AEMS system.

C. The Contractor shall also provide the required hardware to download data from any fault finding annunciator panel to a supplied laptop PC being utilized at the Elevator/Escalator location. The provided software shall permit the downloading and storage of data on the supplied laptop PC from multiple fault finding annunciator panels.

D. The Contractor shall install an Allen Bradley network interface module, (model 1761-NET-AIC, or approved alternative) beside the PLC in the controller and provide 24 VDC power to the module. The Allen Bradley PLC will be used for remote monitoring capabilities into WMATA established engineering monitoring network.

a) The Contractor shall provide all wiring and programming of the PLC to communicate with station data concentrators on the DH-485 network. Coordinate work with WMATA ELES Engineering.

b) The Contractor shall pull all remote monitoring cables to the interface in the elevator controller from the remote monitoring network going back to WMATA's Automated Energy Management System (AEMS) remote terminal unit (RTU).

c) Provide Ethernet communication between the elevator machine room and WMATA's communication room. The communication port shall be located less than 6' from the controller and shall have minimum of two ports for data communication.

E. Terms and Definitions

1. Boolean - A single bit data type.
2. DF1 - A Rockwell Automation Company proprietary communications protocol.
3. DH485 - An industrial communications network used by Allen Bradley programmable controllers.
4. Integer - A data type 16 bit signed (range -32768 to 32767).
5. PLC - Programmable Logic Controller.
6. QEI - QEI Inc. Springfield NJ
7. RTU - Remote Terminal Unit

F. Elevator Remote Monitoring Data Specification

1. Overview

The design of the WMATA escalator & elevator monitoring system shall include a data concentrator PLC to gather data from the elevator control PLC's over an Allen Bradley DH 485 network or ELES Engineering approved equal. The QEI RTU shall read data from the WMATA data concentrator PLC via an RS 232 serial connection to a 1746-BAST (or ELES Engineering approved equal) module using Allen Bradley DF1 (or ELES Engineering approved equal) protocol. See figure 1.1 for reference. This specification defines data to be presented by the

WMATA data concentrator PLC to the QEI RTU. The WMATA data concentrator PLC station shall pole the escalator & elevator controller(s) periodically for data and format the data into blocks within the WMATA data concentrator. An Ethernet TCP/IP connection is available at the Data concentrator PLC. The data concentrator PLC has been designed to collect data from up to (10) escalators and/or elevators. The data concentrator PLC is to be mounted into the existing QEI RTU enclosures and powered by a 120 VAC source from within the RTU. For Metro stations where more than (10) escalators and elevators are present additional data concentrator PLC's will be required.

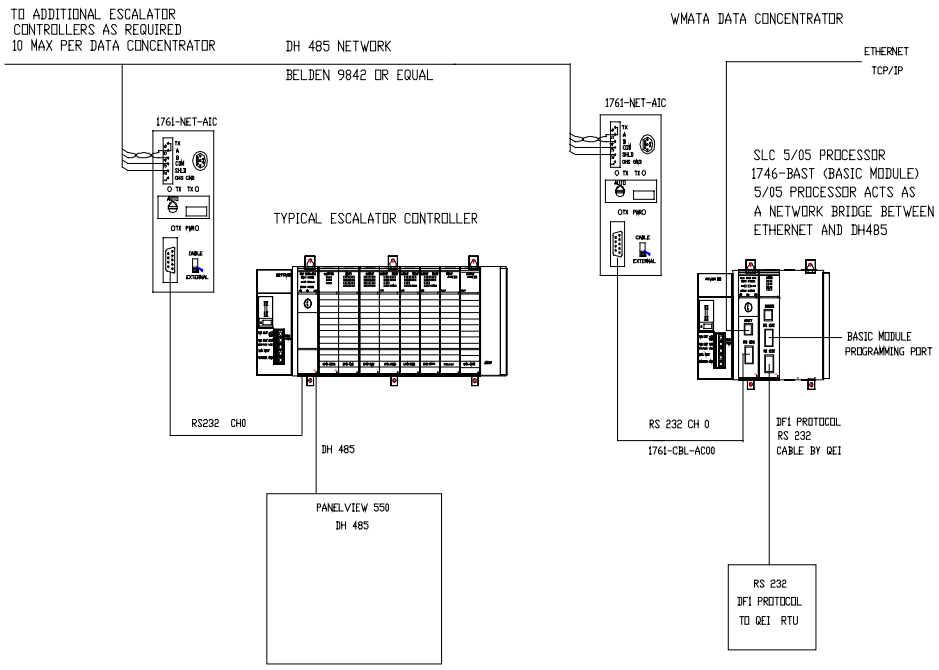

Figure 1.1

2. Data Concentrator PLC Data File Assignments.

The WMATA data concentrator PLC shall store data for up to (10) escalators and/or elevators in any combination as defined in table 2.1.

Table 1

Escalator DH485 node #	Elevator H485 node #	Status bits File	Analog Data File	DC PLC MSG file#	DC PLC MSG buffer file#
1		N20	N21	N81	N101
2		N22	N23	N82	N102
3		N24	N25	N83	N103
4		N26	N27	N84	N104
5		N28	N29	N85	N105
6		N30	N31	N86	N106
7		N32	N33	N87	N107
8		N34	N35	N88	N108
9		N36	N37	N89	N109
10		N38	N39	N90	N110
	11	N40	N41	N121	N141
	12	N42	N43	N122	N142
	13	N44	N45	N123	N143
	14	N46	N47	N124	N144
	15	N48	N49	N125	N145
	16	N50	N51	N126	N146
17		N52	N53	N127	N147
18		N54	N55	N128	N148
19		N56	N57	N129	N149
20		N58	N59	N130	N150

Concentrator PLC (DC)	25	N80	N79		

Each data file shall begin with word 1 (example: escalator #1 status bits begin with N20:1 and end at N20:20)

The data concentrator PLC communication ports shall be configured as follows.

Channel 1

Driver: Ethernet

IP Address: TBD

Subnet Mask: TBD

Gateway Address: TBD

Channel 2

Driver: DH485

Baud Rate: 19.2K

Node Address: 25

1756-BAST basic module communication ports shall be configured as follows.

Port 1: Programming port

Settings -- 19,200 Baud, No parity, 8 bits, 1 stop bit, No handshaking

Port 2: DF1 port

Settings -- 19,200 Baud, No parity, 8 bits, 1 stop bit, No handshaking

DF1 – Op Code 19 (Full Duplex, NHS, ER, Enable DPD, CRC error checking,

Timeout = 50

Retries = 3

RTS on delay = 20 msec

RTS off delay = 20 msec

Module address = 10

DH485 Port – Not Available

3. Data Format

Data Concentrator status in File N80 per table 3.0

Table 3.0 Data Concentrator Status Bits

WORD	BIT	DATA TYPE	DESCRIPTION	"0" STATE	"1" STATE
1	0	BOOLEAN	Spare		
	1	BOOLEAN	Data Concentrator PLC Battery Status	FAULT	NORMAL
	2	BOOLEAN	Data Concentrator Basic Module Battery Status	FAULT	NORMAL
	3	BOOLEAN			
	4	BOOLEAN			
	5	BOOLEAN			
	6	BOOLEAN			
	7	BOOLEAN			
	8	BOOLEAN			
	9	BOOLEAN			
	10	BOOLEAN			
	11	BOOLEAN			
	12	BOOLEAN			
	13	BOOLEAN			
	14	BOOLEAN			
	15	BOOLEAN			

WORD	BIT	DATA TYPE	DESCRIPTION	"0" STATE	"1" STATE
2		BYTE	Data Concentrator checksum byte1		

3		BYTE	Data Concentrator checksum byte2		

Words 4 through 20 of the Data Concentrator status file (N80) are unused.

The Data Concentrator Analog data file (N79) is unused.

Elevator data:

Two 20 word (40 BYTE) blocks of data shall be developed for each elevator one block for status bits and one block for analog data. Table 3.3 defines the format of data for status bits. Table 3.4 defines the format for analog data.

Table 3.3 Elevator Status Bits

WORD	BIT	FAULT TYPE	DESCRIPTION	"0" STATE	"1" STATE
1	0	FAULT	24 VDC POWER SUPPLY	FAULT	NORMAL
	1	FAULT	SAFETY CIRCUIT GOOD	FAULT	NORMAL
	2	FAULT	TOP FINAL LIMIT TRIPPED	FAULT	NORMAL
	3	FAULT	BOTTOM FINAL LIMIT TRIPPED	FAULT	NORMAL
	4	FAULT	DRIVE FAULTED	FAULT	NORMAL
	5	FAULT	OVERLOAD TRIPPED	FAULT	NORMAL
	6	FAULT	STOP BUTTON ACTIVATED	FAULT	NORMAL
	7	STATUS	IN-CAR ALARM BUTTON PRESSED	ALARM	NORMAL
	8	FAULT	OUT OF SERVICE BY DELAY	FAULT	NORMAL
	9	FAULT	MOTOR LIMIT TIMER TRIPPED	FAULT	NORMAL
	10	FAULT	VALVE LIMIT TIMER TRIPPED	FAULT	NORMAL
	11	STATUS	INSPECTION OPERATION ON	ON	OFF
	12	STATUS	INDEDENDANT SERVICE ON	ON	OFF
	13	STATUS	VISCOSITY CONTROL ON	ON	OFF
	14	STATUS	CONTROLLER TEST SWITCH ON	ON	OFF

	15	STATUS	FIRE SERVICE PHASE 1 ON	ON	OFF

WORD	BIT	FAULT TYPE	DESCRIPTION	“0” STATE	“1” STATE
2	0	STATUS	FIRE SERVICE PHASE 2 ON	ON	OFF
	1	FAULT	SMOKE SENSOR @ MAIN ON	ON	OFF
	2	FAULT	SMOKE SENSOR @ OTHERS ON	ON	OFF
	3	STATUS	EMERGENCY POWER OPERATION	ON	OFF
	4	STATUS	OVERRIDE ON	ON	OFF
	5	STATUS	CAR IS RUNNING UP	NOT-RUN	RUNNING
	6	STATUS	CAR IS RUNNING DOWN	NOT-RUN	RUNNING
	7	STATUS	BRAKE LIFTED	LIFTED	NORMAL
	8	STATUS	CAR IS IN DOOR ZONE	T IN ZONE	IN ZONE
	9	STATUS	INTERLOCKS ARE MADE	OPEN	NORMAL
	10	STATUS	FRONT DOOR GATE SWITCH MADE	OPEN	NORMAL
	11	STATUS	FRONT DOOR FULLY CLOSED	OPEN	CLOSED
	12	STATUS	FRONT DOOR FULLY OPEN	CLOSED	OPEN
	13	STATUS	FRONT DOOR REVERSAL ACTIVATED	OFF	ACTIVE
	14	STATUS	FRONT DOOR PROTECTION ACTIVATED	OFF	ACTIVE
	15	STATUS	REAR DOOR GATE SWITCH MADE	OPEN	NORMAL

WORD	BIT	FAULT TYPE	DESCRIPTION	“0” STATE	“1”STATE
3	0	STATUS	REAR DOOR FULLY CLOSED	OPEN	CLOSED
	1	STATUS	REAR DOOR FULLY OPEN	CLOSED	OPEN
	2	STATUS	REAR DOOR REVERSAL ACTIVATED	OFF	ACTIVE
	3	STATUS	REAR DOOR PROTECTION ACTIVATED	OFF	ACTIVE
	4	FAULT	DOOR REVERSAL DEVICE FAILURE	FAULT	NORMAL
	5	FAULT	ROPE BRAKE SET	FAULT	NORMAL
	6	FAULT	LEVELING SYSTEM FAILURE	FAULT	NORMAL
	7	FAULT	WATER INTRUSION ALARM ACTIVE	FAULT	NORMAL
	8	STATUS	ELEVATOR SLC 5/03 LOW BATTERY	FAULT	NORMAL
	9	STATUS	ELEVATOR SLC 5/03 COMM. ACTIVE	FAULT	NORMAL
	10	STATUS	ELEVATOR SLC 5/03 LOCAL/REMOTE	REMOTE	LOCAL
	11	STATUS	ELEVATOR SLC 5/03 RUN/PROG	PROG	RUN
	12	FAULT	FAULTED	FAULT	NORMAL
	13	STATUS	Out of Service	FAULT	NORMAL
	14		SPARE		
	15		SPARE		

WORD	BIT	FAULT TYPE	DESCRIPTION	“0” STATE	“1”STATE
4	0	STATUS	CAR POSITION 1	NOT AT POSITION	AT POSITION
	1	STATUS	CAR POSITION 2	NOT AT POSITION	AT POSITION
	2	STATUS	CAR POSITION 3	NOT AT POSITION	AT POSITION
	3	STATUS	CAR POSITION 4	NOT AT POSITION	AT POSITION
	4	STATUS	CAR POSITION 5	NOT AT POSITION	AT POSITION
	5	STATUS	CAR POSITION 6	NOT AT POSITION	AT POSITION
	6	STATUS	CAR POSITION 7	NOT AT POSITION	AT POSITION
	7	STATUS	CAR POSITION 8	NOT AT POSITION	AT POSITION
	8				
	9				
	10				
	11				
	12				
	13				
	14				
	15				

Words 5 through 20 are unused.

Table 3.4 Elevator Analog Data

WORD	DATA TYPE	MIN VALUE	MAX VALUE	UNITS	SCALE FACTOR	DESCRIPTION
1	INTEGER			AMPS	X10	DRIVE MOTOR AMPS
2	INTEGER			KWH	X1	PRE DAY KWH
3	INTEGER				X1	PRE DAY UP COUNT
4	INTEGER				X1	PRE DAY DOWN COUNT
5	INTEGER				X1	PRE DAY FRONT DOOR CYCLES
6	INTEGER				X1	FAULT CODE
7	INTEGER				X1	PRE DAY REAR DOOR CYCLES
8	INTEGER					
9	INTEGER					
10	INTEGER					
11	INTEGER					
12	INTEGER					
13	INTEGER					
14	INTEGER					
15	INTEGER					
16	INTEGER					
17	INTEGER					
18	INTEGER					
19	INTEGER					
20	INTEGER					

Note: All analog values are multiplied by 16 in the data concentrator to bit shift left 4 bits to align with QEI's 12 bit analog data types.

A note on communication loss

A 60 second watchdog timer is coded into each escalator file. If communications are lost between the data concentrator and the escalator controller for more than 60 seconds the watchdog timer will timeout. When the timer has timed out the communications loss bit will be reset (0) to indicate the communications loss condition.

3. Time and date sync

The QEI RTU shall provide clock synchronization to the WMATA data concentrator PLC every 5 minutes. Table 4.1 defines the address and data format of the clock registers in the WMATA data concentrator PLC. The data concentrator PLC shall set the escalator controller date and time every day at 3 AM.

Table 4.1

FUNCTION	ADDRESS	FORMAT
YEAR	N13:10	4 DIGITS
MONTH	N13:11	2 DIGITS
DAY	N13:12	2 DIGITS
HOUR	N13:13	2 DIGITS 24 HOUR
MINUTE	N13:14	2 DIGITS
SECOND	N13:15	2 DIGITS

4. Data Concentrator PLC Program

The data concentrator PLC includes code to monitor up to 10 escalators and 5 elevators. Each escalators and elevators has an independent code file and a configuration bit. If an elevator is to be monitored the configuration bit must be set corresponding to the DH485 station address of the elevator controller. If the configuration bit is reset (0), the status and analog data table values for the elevator or escalator will be set to 0.

The configuration bits are as follows.

Escalator Configuration Bit	DH485 Address of Escalator Controller	Elevator Configuration Bit	DH485 Address of Elevator Controller
B9:0/1	1	B9:1/1	11
B9:0/2	2	B9:1/2	12
B9:0/3	3	B9:1/3	13
B9:0/4	4	B9:1/4	14
B9:0/5	5	B9:1/5	15
B9:0/6	6	B9:1/6	16
B9:0/7	7	B9:1/7	17
B9:0/8	8	B9:1/8	18
B9:0/9	9	B9:1/9	19
B9:0/10	10	B9:1/10	20

3. Data Concentrator Gateway IP addresses.

The Data concentrator PLC acts as a gateway between the Ethernet and DH485 networks. The PLC contains a list of IP addresses, known as the routing table which will be allowed access to the DH485 network. The routing table will contain 20 addresses.

Station	IP Address
1	TBD
2	
3	
4	
5	
6	
7	
8	
9	
10	
11	
12	
13	
14	
15	
16	

17	
18	
19	
20	

3.07 EXIBIT 1. Hydraulic Single Elevator Macine Room

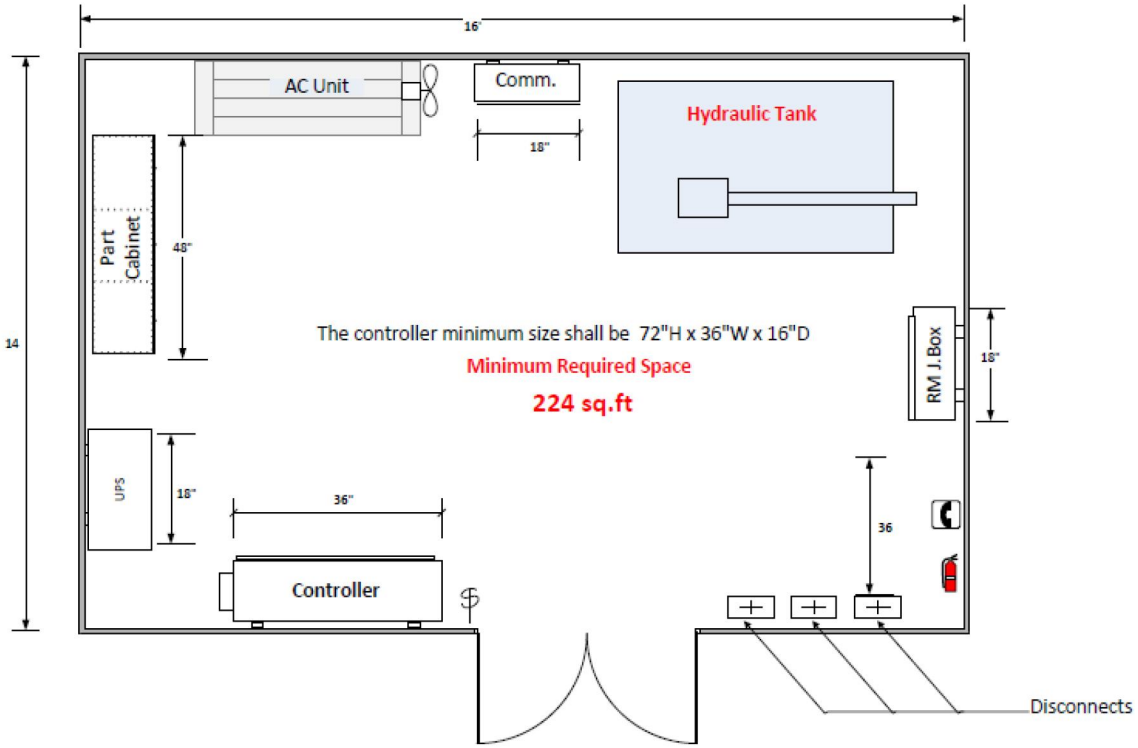

END OF SECTION

WASHINGTON METROPOLITAN AREA TRANSIT AUTHORITY

DEPARTMENT OF
INFORMATION TECHNOLOGY
NETWORK & COMMUNICATIONS SERVICES

SPECIFICATION SECTION 27 02 30

COMMUNICATIONS – FIBER OPTIC SYSTEM

(C11 Potomac Yard Station)

SECTION 27 02 30
COMMUNICATIONS – FIBER OPTIC SYSTEM

PART 1 : GENERAL

1.01 DESCRIPTION

A. This Section describes the basic requirements for the design and installation of the Fiber-Optic System (FOS). Refer to reference 25235-000-3PS-EF00-16704 for Fiber Management Requirements. The Fiber-Optics System will provide the transmission medium for the LAN/WAN between both the C10 Ronald Reagan National Airport station, C12 Braddock Road rail station and the newly constructed C11 station. To maintain maximum network reliability, conduit / route diversity is required in the emplacement of the (Primary) and (Secondary) cable during installations.

B. New fiber optic cables shall be installed under this contract to provide a medium for the FOS. The Contractor shall design a system that has optical fiber paths between each new passenger station with connections to the Jackson Graham Building and the Carmen Turner Facility over existing fiber optic cables. The Contractor shall install Primary and Secondary 288 fiber-optic cables from the existing C10 Ronald Reagan National Airport & C12 Braddock Road rail station Communication Rooms to the newly constructed C11 station. The contractor shall install one 24 Strand OSP Single mode fiber will be installed from the C11 Potomac Yard station Communications Equipment Room (CER) to the Tie Breaker Station (TBS) at 951 Slaters Lane in Alexandria (Chain marker 497+00) and to the Tie Breaker Station (TBS) at 3101 Potomac railroad Access Road in Alexandria (Chain marker 407+00) as well as the C11 Traction Power Substation at (Chain marker 459+00 to support remote monitoring SCADA services. The contractor shall install a hybrid 24/24 strand OS2/OM4 cable from the main (CER) to each remote LAN location within the rail station. These locations can be Telecommunications Rooms (TR) Telecommunications Enclosures (TE) Entrance facilities (EF) or remote monitoring SCADA Telecommunications enclosures (TE) that are located in the AC Switchboard room.

C. The FOS shall be designed to accommodate the LAN/WAN and other optical transmission requirements, as needed.

D. The FOS in conjunction with the LAN/WAN is designed to provide voice and data transmission capabilities to accommodate the communications requirements of each of the passenger stations, as well as other selected buildings along the Airports Authority's rights-of-way.

E. The FOS shall also provide for IP CCTV video transmission via the LAN/WAN, from the new passenger stations to the Jackson Graham Building.

F. The data transmission equipment of the FOS described herein includes, but is not limited to, the following components:

1. Fiber Optic Cable Plant.
2. LAN/WAN Equipment.
3. Optical Fiber Termination Facilities.

G. The fiber optic cable plant shall be composed of separate fiber optic cable runs for the various WMATA transit routes from the nearest adjacent rail stations to be tied into WMATA's existing fiber optic cable plant..

1. The fiber optic cable runs shall be composed of individual fiber optic cable spans installed along WMATA's rights-of-way.
2. The fiber optic Primary and Secondary cable runs shall contain the necessary optical fibers (including spares) for the data transmission requirements, in both directions of transmission In addition; the fiber optic Primary and Secondary cables shall contain optical fibers for future use.
   a. The quantity of spare optical fibers for the voice and data transmission within each fiber optic cable span shall be based on a splice design provided by WMATA-IT/NCS
   b. The fiber optic cables shall be installed within fiber optic cable mesh pulling sleeves in all conduits and cable ducts along the rights-of-way and within all passenger stations. (Cable mesh pulling sleeves are not required in cable troughs.)
   c. To maintain route diversity the primary and secondary cable runs will not travel on the same trough system. They must be separated. Primary cables shall be installed in the outbound track trough and secondary cables shall travel in the inbound trough system.
3. The contractor shall provide two 288 fiber cables to the C11 station from both the inbound and outbound stations, for connectivity.

H. The optical fiber termination facilities shall consist of a wall mount fiber splice enclosure and rack mountable fiber patch panels in each of the passenger stations or wayside communication node facility for the Primary and Secondary fiber cables. Fiber termination facilities shall allow the appropriate optical fibers of the fiber optic cables to be terminated and shall provide splice panel organizers for the splicing of optical fibers that "pass through" any location. Termination facilities at all locations facilities shall be provided by the contractor.

1.02 QUALITY ASSURANCE

A. Codes, Regulations, Reference Standards and Specifications:

1. Codes and regulations of the Authority Having Jurisdictions.

2. 47 CFR 15, Subparts A and B.
3. UL 50.
4. NEMA AB 1 and NEMA KS 1.
5. ITU-T.
6. NFPA 130 2013 Edition.
7. ANSI/TIA 568-C-0, Generic Communications Cabling for Customer Premises, February 2009
8. ANSI/TIA 568-C-3, Commercial Building Standard Telecommunications Standard Part 3: Optical Fiber cabling components.
9. ANSI/TIA 569-C, Commercial Building Standard Telecommunications pathways and spaces.
10. TIA-527, Measurements of optical power loss of installed single mode fiber cable plant-OFSTP-7
11. TIA-526-14-A, Optical power loss measurements of installed multimode fiber cable plant-OFSTP-14A.
12. TIA-758-A, Customer-Owned Outside Plant Telecommunications Infrastructure Standard, August 2004.
13. BICSI-TDMM, Building Industries Consulting Services International, Telecommunications Distribution Methods Manual (TDMM) – 13th Edition, 2014

B. Design and production tests: Refer to the Contract Documents. Submit certified test results, or provide certified test results on identical units. Furnish certified test reports showing test data and results as well as manufacturer's comments on tests.

C. Interchangeability: Refer to the Contract Documents. Furnish products of a manufacturer regularly engaged in the manufacture of applicable systems. In addition: Standard commercial products shall be furnished whenever such equipment and materials will satisfy the stated specifications. Suitable modified standard commercial devices shall be furnished when required to satisfy specification requirements. Custom developed and fabricated equipment units and devices shall be confined to those items for which suitable commercial off-the-shelf (COTS) products are not available to guarantee compliance with the Specifications. When custom design, fabrication, or assembly is required, every effort shall be made to minimize the number of different modules, solid-state devices used.

1. With each system, subsystem and facility, two or more like functions shall be performed by identical units. In no case shall the equipment or hardware used in one portion of a system, subsystem or facility be different from that used in another portion to perform the same function under similar operating and environmental conditions (outdoor systems are distinct from indoor systems).
2. Equipment shall be physically compatible with recent versions of existing WMATA equipment performing similar functions and used for comparable

applications elsewhere in similar WMATA facilities, insofar as possible. The use of adapter plugs, interface boxes, and replacement mounting brackets or enclosures that fit available space and mounting holes may be allowed by the Airports Authority to maintain interchangeability when competitive products that do not require such devices are determined to be unavailable (applicable to COTS major equipment items only). Custom designed and fabricated equipment must be fully interchangeable without requiring the use of such devices. If a determination is made to allow use of such devices, all necessary adapters and interface devices shall be provided with each item of equipment furnished, at no additional cost.

3. Equipment shall be software compatible with recent versions of existing WMATA equipment performing similar functions and used for comparable applications elsewhere in similar WMATA facilities.

4. Major items of equipment furnished shall be within the physical size and configuration limitations specified in provisions of this Contract. If such specifications are not included in the provisions, major items of equipment shall be of a physical size and configuration closely comparable to equipment currently in use of comparable applications elsewhere in similar WMATA facilities.

5. Exception: Lighter weight and smaller sized more modern versions of equipment are sought by the Airports Authority where their use presents significant advantages. The use of new generations of equipment that differ in size and are not fully interchangeable will be considered for approval, in order to take advantage of significant technological improvements developed by industry.

D. Qualifications of Instructor for Operation and Maintenance Training: Refer to the Contract Documents. Perform operation and maintenance training for development and performance of operation and maintenance training for applicable systems. Qualifications will be considered adequate when the following is demonstrated:

1. Instructor has in-depth knowledge of the design, packaging, operations, maintenance and trouble-shooting of the systems to be taught.

2. Instructor has been trained in teaching methods or has previous satisfactory experience in teaching with emphasis on the subject matter to be covered in the course of instruction.

1.03 REFERENCES

A. FCC Part 15, Radio Frequency Devices.

1.04 SUBMITTALS

A. See the Contract Documents for this section.

1.05 RELATED SECTIONS

A. Section 27 20 00 – Local Area Network / Wide Area Network (LAN/WAN)

1.06 SYSTEM DESCRIPTION

A. Description: The FOS provides the transmission medium for voice and data signal transmissions between the Jackson Graham Building, Carmen Turner Facility, and passenger station(s). To maintain maximum reliability, route diversity for the fiber-optic, Primary and Secondary cables shall be installed in separate pathways along the alignment.

B. Capacity:

1. The Contractor shall design, furnish, and install fiber splice enclosures and patch panels at the new fiber-optic terminal locations, and at interface locations along the fiber cable route to interconnect/service the new fiber-optic circuits.

2. The Contractor shall furnish fiber optic patch cords in quantities to accommodate all patch possibilities on each furnished patch panel.

1.07 SYSTEM PERFORMANCE REQUIREMENTS

A. The Contractor shall be responsible for the overall performance of the FOS. The following overall system performance requirements are designed to ensure that the FOS, delivered in accordance with these Specifications, meet the requirements of WMATA.

1. Span Line Transmission: Capability of supporting 1310 & 1550 nanometer optical wavelengths on two optical fibers; one in each direction.

2. Span Line Gain:

a. Optical link adequate to support a minimum of 9 dB of margin in the span line loss budget (for equipment degradation, temperature variation and future splices) and maintain a Bit Error Rate (BER) of less than 1 in 10^{10}. There shall be no inter-nodal repeaters.

b. Optical Attenuation: Receiver optical line input shall be regulated with optical attenuators to ensure that the input optical power to the receiver (without the loss margin) does not exceed the maximum allowable input power indicated by the manufacturer.

c. Splice Losses: 0.05 dB or less average, 0.10 dB max.

d. Connector Losses: No greater than 0.50dB per connector..

1.08 QUALIFICATIONS

A. Manufacturer: Company specializing in manufacturing the Products specified in this section with minimum three years documented experience.

B. Supplier: Authorized distributor of specified manufacturer with minimum three years documented experience.

1.09 REGULATORY REQUIREMENTS

A. Conform to requirements of FCC Part 15 and REA PE-90.

1.10 MAINTENANCE SERVICE

A. See the Contract Documents for this section.

PART 2 : PRODUCTS

2.01 FIBER SPLICE PANEL

A. Mounting: Wall/Floor mountable.

B. B. The Splice Panel shall include:

1. An adequate number of splice trays; each splice tray shall accommodate a minimum of 12 fusion type splices.
2. Storage of excess lengths of the pigtail assemblies and buffer tubes/optical fibers of Fiber optic cables.
3. Sufficient tray areas for excess optical fiber storage with provisions to assure that the remaining unassigned optical fibers do not exceed a 2-inch bend radius.
4. Round splice trays that also house excess FO pigtail and tube slack.

C. Provide cable clamps to secure fiber optic cables to the chassis. Cable clamps include the necessary hardware to ground the metallic central strength members (if provided) and corrugated steel shield armor of the fiber optic cables.

2.02 FIBER PATCH PANEL

A. Mounting: 19-inch EIA standard rack.

B. The termination/distribution cable trays shall include:

1. 36 optical bulkhead adapters; single-mode optical fiber Type SC.
2. 36 corresponding single-mode optical fiber pigtail assemblies with appropriate type optical connectors to mate with optical bulkhead adapters.
3. Designation strips for identification of the 36 optical bulkhead adapters.

2.03 FIBER OPTIC CABLES (288-FIBERS)

A. General.

1. The fiber optic cables shall be of an open-channel type configuration or of a loose tube type configuration.
2. The quantity of optical fibers within each fiber optic cable shall be chosen to fulfill the operational requirements of the WMATA, and continue the fiber-optic design philosophy for operational and spare fibers used in prior constructed rail sections/stations, and depicted in a typical configuration on the Contract Drawings.
3. Shall conform to NFPA-130, 2017

B. Cable Composition - Loose Tube Type Configuration.

1. Central Strength Member
2. Water Blocking Tape
3. Gel Free Buffer Tube
4. Dielectric Water Blocking Strength Members
5. Double Jacket, Single Armor
6. Rip cords
7. UV Resistant Inner Jacket
8.
    a. Stranded galvanized steel wire with polyethylene overcoat or dielectric glass fiber reinforced plastic (overcoat is optional).
9. Over-length Loose Tubes:
    a. Hard, abrasion-resistant compound.
    b. Provides mechanical and environmental protection of the optical fiber.
    c. Appropriate quantity to accommodate optical fiber requirements.
    d. Each loose tube individually color-coded.
10. 288 Single-mode Optical Fiber strands.
11. Water-Blocking Compound:
    a. Water Blocking tape.
    b. Dielectric Water Blocking Strength Members.
12. Core Wrap:
    a. Polyester core tape applied longitudinally over slotted-core to contain water-blocking compound.
13. Inner Jacket:
    a. Medium-density polyethylene.

b. Carbon black in color for protection against ultraviolet radiation.

14. Corrugated Steel Shield Armor:

a. Electro chrome steel coated with ethylene-acrylic copolymer on both sides.

b. Applied longitudinally over inner jacket.

c. Electrically continuous.

15. Outer Jacket:

a. Low smoke and zero halogen.

b. Carbon black in color for protection against ultraviolet radiation.

16. NFPA-130 compliant

17. Orange in color.

C. Overall Physical Cable Characteristics.

1. Pulling load (Installation): ≥600-lbf (2669-Newtons).
2. Operating Load: ≥225-lbf (1000-Newtons).
3. Crushing Resistance: ≥344-lb/in (600-Newtons/cm).
4. Operating Temperature Range: -40 degrees Celsius to +70 degrees Celsius.

D. Optical Fiber Characteristics

1. Type: Single-mode.
2. Operating Wavelength: 1310-nm / 1550-nm
3. Attenuation @ 1310-nm: 0.5-dB/km maximum.
4. Attenuation @ 1550-nm: 0.25-dB/km maximum.
5. Maximum Dispersion: <3.5 ps/km-nm over the wavelength range of 1285-nm to 1335-nm.
6. Cut-off Wavelength: 1200 + 70 nm.
7. Fiber Mode Diameter: 8 + 1 µm.
8. Fiber Outer Diameter: 125 + 3 µm.
9. Protective-Coating Diameter: 250 + 20 µm (minimum coating thickness of 40 µm).
10. Each optical fiber shall be individually color-coded.

2.04 FIBER OPTIC PATCH CORD

A. Connector: Type SC on one end and SC or equipment related on the other end; single-mode fiber.

B. Length: Three meters.

2.05 FIBER OPTIC CABLE WARNING TAG

A. Weatherproof.

B. 22-Mil PVC with UV inhibitors with silicon adhesives.

C. UV Type II Ink Graphics.

D. Graphics to include “CAUTION-FIBER-OPTIC CABLE - PROPERTY OF WMATA IT/NCS”.

PART 3 : EXECUTION

3.01 FIBER OPTIC CABLE - GENERAL INSTALLATION

A. Installation practices shall conform to the fiber-optic cable manufacturer’s installation recommendations, especially those concerning allowable bending radius of the cable and/or individual fibers.

3.02 PASSENGER STATION INSTALLATION

A. Install the following equipment in the Communications Equipment Room of the passenger station (exact location to be approved by the Airports Authority) on a 19-inch EIA standard equipment rack:

1. Fiber Splice enclosure
2. Primary Fiber Patch Panel.
3. Secondary Fiber Patch Panel.

B. Provide 120-VAC, 60-Hz to the appropriate equipment from the SNMP manageable and switchable AC power receptacle strip on the equipment rack.

C. Install assembled optical fiber patch cords to connect the Fiber optic Add/Drop Repeater to the Fiber Patch Panels.

D. Install appropriate optical attenuators at the Fiber Patch Panels.

E. Provide appropriate type fiber optic hazard warning signs/tags (approved by WMATA IT/NCS) on the Fiber Splice Panel, the Fiber Patch Panel, the Fiber optic Add/Drop Repeater, and the optical fiber patch cords.

3.03 EXISTING PASSENGER STATION INSTALLATION

A. The Contractor shall install the following equipment in an existing passenger station, as required to provide the fiber-optic cable connectivity contained in his system design:

1. Primary and Secondary Fiber Splice Panel.
2. Primary and Secondary Fiber Patch Panels.

B. Provide appropriate type fiber optic hazard warning signs/tags (approved by the Airports Authority) on the Fiber Splice Panel, the Fiber Patch Panel and the optical fiber patch cords

3.04 INSTALLATION ALONG THE RIGHTS-OF-WAY

A. Fiber Optic Cable Mesh pulling sleeves

1. Install fiber optic cable mesh pulling sleeves in all ancillary structures, conduits, cable ducts within duct banks within the passenger station, to facilitate the installation and protection of the fiber optic cables in accordance with the Contractor's system design.
2. Provide appropriate fiber optic hazard warning tags (approved by WMATA IT/NCS):
   a. At each manhole location in the duct bank of the rights-of-way.

B. Fiber Optic Cable.

1. Install the Primary fiber optic cables following track plans for the Primary side of the cable plant for the entire run of the Primary cable. Install the Secondary fiber-optic cables along a different physical route than the Primary cable following the track plan on the opposite side of the Primary cable layout for the entire cable run of the secondary cable, including cable troughs and duct banks. Install the fiber optic cables in the aforementioned configuration in Contractor-furnished conduit, and in duct banks and cable troughs, along the rights-of-way.
2. Route the fiber optic cables through the passenger station in cable ducts, conduit, cable troughs and/or air plenums under passenger station platforms. Conduit plants should be utilized when available. Provide independent conduit plant dedicated for fiber optic cable under the passenger station platforms and in plenums. Furnish other conduit and hardware as required.
3. Connect the Primary fiber optic cables to the Primary Fiber Patch Panels within each passenger station Communications Equipment Room. Connect the Secondary fiber optic cables to the Secondary Fiber Patch Panels within each passenger station Communications Equipment Room. Utilize fiber optic patch cords for through connection to the Jackson Graham Building, and the Carmen Turner Facility as required.
4. Provide appropriate weatherproof fiber optic cable warning tags. Install hazard warning tags on the fiber optic cables:
   a. Every 10 feet within the passenger station Communications Equipment Rooms.

b. At each location where the fiber optic cables enter/exit the conduit plant and cable ducts.

5. 5. Ground the armor and the steel central strength member (if applicable) of all fiber optic cables using a single-point grounding scheme.

C. Splicing.

1. All splices within the passenger stations Communications Equipment Rooms shall be fusion type and arranged within the splice trays of the Fiber Splice enclosure, in accordance with the organizational design of the splice trays.

2. Splices along the rights-of-way will not be permitted unless specifically approved by the COTR, in writing, on a case-by-case basis.

a. Splices Type: Fusion.

b. Contain splices within re-enterable splice enclosures that are designed specifically for the splicing of fiber optic cables. Provide appropriate type splice tray(s) within each splice enclosure.

c. The armor and the steel central strength member (if applicable) of the fiber optic cables shall be electrically continuous across the splices.

3. Applied appropriate protective coating to all fusion splices.

4. If splices are not made immediately after cable installation, seal the ends of the cables as recommended by the manufacturer to prevent entry of moisture.

3.05 MANUFACTURER'S FIELD SERVICES

A. See of the Contract Documents for this section.

3.06 ADJUSTING

A. Adjust operating Products and equipment to ensure smooth and unhindered operation

END OF SECTION

Specification Revision History Specification 27 02 30				
Rev	**Section**	**Type**	**Change**	**Reason for Change**
	27 02 30			

Type Descriptions:
m general, non-substantive modification
+ added substantive content
- deleted substantive content
Note: Formatting changes are not included in the revision history.

WASHINGTON METROPOLITAN AREA TRANSIT AUTHORITY

DEPARTMENT OF

INFORMATION TECHNOLOGY

NETWORK & COMMUNICATIONS SERVICES

INFRASTRUCTURE DESIGN & WIRING STANDARDS

Fiber Optic Systems

Division 27 05 25

1. TITLE: Fiber Optic System (FOS)

2. GENERAL DESCRIPTION & FUNCTIONALAITY:

a. The Fiber-Optic System (FOS) shall provide the transmission medium for multiplexed voice and data signals throughout the WMATA Communications Network. The Fiber-Optics System for WMATA will provide the transmission medium for the LAN/WAN between all WMATA facilities using what are designated as Primary and Secondary FO cable trunks. All rail stations will incorporate two (2), 288 strand, single mode FO feeds (Primary& secondary) from both the inbound and outbound stations. To maintain maximum network reliability, conduit / route diversity is required in the emplacement of the (Primary) and (Secondary) cable during installations. For all rail yard construction efforts, both primary and secondary FO trunks will be landed in separate physical locations (S&I & MOW buildings) within the rail yard a secondary FO cabling mesh topology will be installed from each primary and secondary FO trunk landing point to all other facilities where LAN services will be present. To provide maximum reliability, route diversity shall be provided for the fiber-optic (PRIMARY) and (SECONDARY) cable installations along the rights-of-way. Subsystems are remote monitoring SCADA FOS network and Automatic Train Control (ATC) SCADA FOS network.

3. SYSTEM COMPONENTS:

a. **Cable:**
   i. Outside plant (OSP) fiber optic cable.
   ii. Inside plant (ISP) fiber optic cable.
   iii. Fiber optic pigtail cabling.
   iv. Fiber Patch cords

b. **Enclosures:**
   i. Fiber optic splice enclosures.
   ii. The fiber optic patch panel.
   iii. Fiber termination enclosures.

c. **Cabinets / Racks:**
   i. 19”X 7’ Equipment rack with a 6” deep center channel with 45 rack units front and back.
   ii. 24”W X 26”D X 48”H Wall mount network cabinet with 19” wide rails and 26 rack units.

4. INSTALLATION:

a. Fiber optic splice enclosures: shall be a floor mounted unit installed in the rail station communications equipment room (CER). These enclosures are capable of housing all of the fiber optic cabling entering into the facility. It will also have enough space to house any fiber optic pigtail cabling that will extend to the CER rack face.
b. Equipment racks shall be installed in the rail Station Communications Equipment Room (CER) to house fiber optic system patch panels and LAN-WAN equipment.
c. Vertical cable management will be installed between every equipment rack in the rail Station Communications Equipment Room (CER) to better manage fiber patch cords.
d. Wall mountable rack enclosures shall be installed for every remote LAN location where the build out of LAN room is not possible. The ISP fiber optic cable that terminated at these locations will be terminated at 100%. No dark fiber is allowed in ISP fiber cabling.
e. The fiber optic patch panels shall be placed near the top of the equipment rack/cabinet. All fiber within this enclosure or rack shall be terminated utilizing subscriber connectors (SC). There will be a minimum of two fiber optic patch panels; one for the inbound and one for the outbound OSP fiber connections. Additional patch panels can be planned, for cabling from remote LAN locations as well as parking garage point of sales (POS) WMATA LAN extensions.
f. Fiber optic "pigtail" cables shall be installed between the floor mounted fiber splice enclosure and the fiber optic patch panel at the rack face. These cables will splice to the appropriate stands in the splice enclosure and will terminate at the rack face in the fiber optic patch panel utilizing subscriber connectors.
g. Fiber patch cords appropriately sized will be installed between fiber optic patch panels as well as between fiber optic patch panels and LAN equipment. Excessive patch cord slack will not be looped. The contractor will provide the correct sized factory made cords. No field terminated patch cords are allowed!
h. Adequate pathways will be installed for cable travel. These pathways will be appropriately sized to follow a 40% fill ratio. All conduit pathways will have a fabric sleeve system installed with multiple cells to provide enough spare cells for future cable pulls. These fabric sleeves should be sized to ensure full utilization of the installed conduit. All OSP cable will be installed in plastic flexible inner duct with all road way cable toughs.
i. All cables and termination hardware shall be 100% tested for defects in installation and to verify cabling system performance under installed conditions according to the requirements of ANSI/TIA-568-C.
j. All pairs of each installed cable shall be verified prior to system acceptance.
k. Any defect in the cabling system installation including but not limited to cable, connectors, feed through couplers and patch panels shall be repaired or replaced

in order to ensure 100% useable fiber strands in all cables installed.

l. All cables shall be tested in accordance with this document, the latest revision of the ANSI/TIA standards, and best industry practice. If any of these are in conflict, the Contractor/Installer shall bring any discrepancies to the attention of this WMATA IT/NCS for clarification and resolution.

m. All cabling installed to support this system must be labeled according to the WMATA IT/NCS standards and practices.

1. TITLE: Remote Monitoring Supervisory Control and Data Acquisition (SCADA) Fiber Optic System (FOS)

2. GENERAL DESCRIPTION & FUNCTIONALAITY

a. The Remote monitoring SCADA Fiber-Optic System (FOS) shall provide the transmission medium for multiplexed data signals between the SCADA equipment and SCADA data collection equipment.

3. SYSTEM COMPONENTS:

a. **Cable:**
   i. Inside plant (ISP) fiber optic cable.
   ii. Fiber Patch cords

b. **Enclosures:**
   i. The fiber optic patch panel.

c. **Cabinets / Racks:**
   i. 24” W X 26” D X 48”H Wall mount network cabinet with 19” wide rails and 26 rack units.

4. INSTALLATION:

a. Wall mountable SCADA equipment cabinets shall be installed within the room being serviced. In either the Traction Power Substation (TPSS), Tie Breaker Station (TBS) and the rail station AC Switchboard room to house fiber optic system patch panels and SCADA network equipment.

b. Horizontal cable management will be installed between the appropriate equipment in the SCADA cabinet to better manage fiber patch cords.

c. The ISP fiber optic cable that terminated at these SCADA cabinets will be terminated at 100%. No dark fiber is allowed in ISP fiber cabling.

d. The fiber optic patch panels shall be placed near the top of the SCADA cabinet. All fiber within this enclosure shall be terminated utilizing subscriber connectors (SC).
e. One (1) Fiber optic cable will be pulled from this SCADA cabinet to the nearest FOS splice/Termination location or directly to the nearest rail station Communications Equipment Room. This cable is to extend WMATA's LAN-WAN network to the SCADA cabinet.
f. Other fiber optic cabling will extend from the SCADA cabinet to the various AC and DC breakers as well as the RTU cabinet and other locations throughout the room to establish communications between the SCADA network equipment and the Ethernet Input-output equipment.
g. Fiber patch cords appropriately sized will be installed between fiber optic patch panels as well as between fiber optic patch panels and SCADA equipment. Excessive patch cord slack will not be looped. The contractor will provide the correct sized factory made cords. No field terminated patch cords are allowed!
h. Adequate pathways will be installed for cable travel. These pathways will be appropriately sized to follow a 40% fill ratio. All conduit pathways will have a fabric sleeve system installed with multiple cells to provide enough spare cells for future cable pulls. These fabric sleeves should be sized to ensure full utilization of the installed conduit. All OSP cable will be installed in plastic flexible inner duct within all road way cable toughs.
i. All cables and termination hardware shall be 100% tested for defects in installation and to verify cabling system performance under installed conditions per the requirements of ANSI/TIA-568-C.
j. All fiber strands of each installed cable shall be verified prior to system acceptance.
k. Any defect in the cabling system installation including but not limited to cable, connectors, feed through couplers and patch panels shall be repaired or replaced to ensure 100% useable fiber strands in all cables installed.
l. All cables shall be tested in accordance with the latest revision of the ANSI/TIA standards, and best industry practice. If any of these are in conflict, the Contractor/Installer shall bring any discrepancies to the attention of this WMATA IT/NCS for clarification and resolution.
m. All cabling installed to support this system must be labeled per the WMATA IT/NCS standards and practices.

5. WMATA FACILITY CABLING:

a. Facility cabling is cabling that supports user equipment such as computers and telephones, time clocks and fax machines. It connects primary and edge LAN equipment as well as supports telephone services to include, but not be limited to: Rail Stations WMATA Bus Garages, Rail Yards, Satellite office spaces, Traction Power substations, Tie-breaker stations and project trailers. Essentially any space that supports WMATA personnel and LAN-WAN services. These spaces will require FOS systems as well as Copper cable systems to support WMATA MetroNET LAN-WAN services. **See Infrastructure Design and Wiring Standards- Division 27-10-00**

b. Horizontal Distribution cable shall include:
   - **i.** Category 6 cabling for all WAO locations. (Some specialty types are used for IP cameras and other devices.)

c. Backbone cabling shall include:
   - **i.** Copper cabling shall be Category 3 multi pair cabling for all telephone system tie cables.
   - **ii.** Multi-mode fiber optic cabling Laser Optimized (LO) 50um.(OM4)
   - **iii.** Single-mode fiber optic cabling 9um (OS2)

d. All system specific products will be listed in the WMATA IT/NCS equipment standards document. A copy of this can be obtained from the assigned WMATA IT/NCS project manager.

6. WMATA PROVIDED SERVICES:

a. All WMATA provided services and equipment will be coordinated through the assigned WMATA project manager.

b. Services shall include: Any fiber or copper connections over WMATA owned cable facilities. Any deviation from this document, associated system specifications or the WMTA Wiring Standards document must be approved in writing by WMATA IT/NCS personnel and any coordination with service providers must be approved by WMATA IT/NCS.

WASHINGTON METROPOLITAN AREA TRANSIT AUTHORITY

DEPARTMENT OF
INFORMATION TECHNOLOGY
NETWORK & COMMUNICATIONS SERVICES

INFRASTRUCTURE DESIGN & WIRING STANDARDS
General Overview

CSI Master Format

Structured Cabling
Division 27 10 00

PART 1 - GENERAL SPECIFICATIONS

1.1 SCOPE

This document describes the standards, products and execution requirements relating to furnishing and installing Telecommunications Cabling at new or remodeled buildings for the Washington Metropolitan Area Transit Authority, herein after called WMATA. These standards are provided for use in planning spaces, budgeting for communications infrastructure, and as a technical description suitable for use in Requests for Proposals.

These standards, used in conjunction with published current ANSI/TIA standards represent a structured communications wiring system which will accommodate technological developments over the next several years. As technology changes this document will be amended to provide the most current and effective information available. Any aspects of communications wiring or design, which are not sufficiently addressed in this document, shall be brought to the attention of Network Technology Operations & Infrastructure Design (IT-NCSInfrastructure@wmata.com) in the department of Information Technology, Network and Communications Services.

1.2 REGULATORY REFERENCES:

All work and materials shall conform in every detail to the rules and requirements of the National Fire Protection Association, the local Electrical Code and present manufacturing standards.

All materials shall be UL Listed and shall be marked as such. If UL has no published standards for a particular item, then other national independent testing standards shall apply and such items shall bear those labels. Where UL has an applicable system listing and label, the entire system shall be so labeled.

The cabling system described in this document is derived from the recommendations made in recognized telecommunications industry standards. The following documents are incorporated by reference:

1. ANSI/TIA-568-C.0, Generic Communications Cabling for Customer Premises, February 2009
2. ANSI/TIA - 568-C.1, Commercial Building Telecommunications Cabling Standard Part 1: General Requirements
3. ANSI/TIA - 568-C.2, Commercial Building Telecommunications Cabling Standard Part 2: Balanced Twisted-Pair Cabling Components
4. ANSI/TIA - 568-C.3, Commercial Building Telecommunications Cabling Standard Part 3: Optical Fiber Cabling Components
5. 5. ANSI/TIA – 569-C, Commercial Building Standard for Telecommunications Pathways and Spaces,
6. TIA-527, Measurement of Optical Power Loss of Installed Single-mode Fiber Cable Plant – OFSTP-7
7. TIA-526-14-A, Optical Power Loss Measurements of Installed Multimode Fiber Cable Plant - OFSTP-14A
8. TIA-598-C, Optical Fiber Cable color Coding, January, 2005
9. ANSI/TIA – 570-B, Residential Telecommunications Infrastructure Standard, April 2004
10. ANSI/TIA – 606 - B, Administration Standard for Commercial Telecommunications Infrastructure April 2012
11. ANSI/TIA- 607-B - Commercial Building Bonding and Grounding (Earthling) Requirements for Telecommunications, August 2011
12. TIA– 758-A, Customer-Owned Outside Plant Telecommunications Infrastructure Standard, August 2004
13. BICSI - TDMM, Building Industries Consulting Services International, Telecommunications Distribution Methods Manual (TDMM) – 13th Edition, 2014
14. National Fire Protection Agency (NFPA – 70) 2017 Edition
15. National Fire Protection Agency (NFPA – 72) 2016 Edition
16. National Fire Protection Agency (NFPA-130) Standard for Fixed Guideway Transit and Passenger Rail Systems, 2017 Edition

If this document or any of the documents listed above are in conflict, then the more stringent requirement shall apply. All documents listed are believed to be the most current releases of the documents. The contractor/installer has the responsibility to determine and adhere to the most recent release when installing or designing for installation.
This document does not replace any code, either partially or wholly. The contractor/installer must be aware of local codes which may have an impact on the design or installation of any cabling.

1.3 WORK INCLUDED

The work included under this design standard consists of furnishing all labor, equipment, materials, and supplies and performing all operations necessary to complete the installation of this structured cabling system in compliance with the specifications and drawings. The Telecommunications contractor/installer will provide and install all of the required material to form a complete system whether specifically addressed in the technical specifications or not.
The work shall include, but not be limited to the following:

- Furnish and install a complete telecommunications wiring infrastructure
- Furnish, install, and terminate all UTP and Optical Fiber cable
- Furnish and install all wall plates, jacks, patch panels, and patch cords
- Furnish and install all required cabinets and/or racks as required and as indicated
- Furnish any other material required to form a complete system
- Perform link or channel testing (100% of horizontal and/or backbone links/channels) and certification of all components
- Furnish test results of all cabling to the owner on compact disk and paper format, listed by each ER, EF,TR, TE, then by workstation ID
- Adhere and comply with all requirements of the cable manufacturer's Certification program
- Provide owner training and documentation. (Testing documentation and As-built drawings)

1.4 SUBMITTALS

Under the provisions of this design and wiring standard, prior to the start of work the telecommunications contractor/installer shall:

- Submit copies of the certification of the company and names of staff that will be performing the installation and termination of the installation to provide proof of compliance of this design and installation standard.
- Submit proof from manufacturer of contractor's good standing in manufacturer's program. This certification must be completed annually and submitted to this office (IT-NCSInfrastructure@wmata.com).
- Submit appropriate cut sheets and samples for all products, hardware and cabling.
- Work shall not proceed without the Owner's approval of the submitted items.
- The telecommunications contractor/installer shall receive approval from the Owners on all substitutions of material. No substituted materials shall be installed except by written approval from the Owner and this office.

1.5 QUALITY ASSURANCE

The telecommunications contractor/installer shall be a company specializing in communication cabling installation. The contractor must be in good standing with a minimum of 30% of the technicians on site and at least one manager current with the required training.

IT/NCS Cable Installation Quality Control Process

1. QA Phase 1
    - IT/NCS Cable Installation Practices. Inspections will ensure the following conform to TIA/EIA, WMATA Design & Wiring Standards, and all Local codes
    - Cable bend radius
    - Cable support in ceiling (Hangers/J hooks/ladder racks)
    - Cable slack at the work area and the TR
    - TR Configuration (Proper cable placement based on scope of work)
2. QA Phase 2
    - IT/NCS Cable Termination Practices. Inspections will ensure the following conform to TIA/EIA, WMATA Design & Wiring Standards, and all Local codes
    - Correct type, style and color of work area outlet
    - Correct jack pin out configuration
    - Correct TR termination: Pin out, Hardware and placement
    - Correct backbone termination
3. QA Phase 3
    - IT/NCS Cable Installation Practices. Inspections will ensure the following conform to TIA/EIA, WMATA Design & Wiring Standards, and all Local codes
    - Final check of horizontal / Backbone cable route
    - Correct racks/enclosure installation. Type and placement
    - Overall progress
4. QA Phase 4 (Final)
    - IT/NCS Final Testing and Inspection. Inspections will ensure the following conform to TIA/EIA, WMATA Design &Wiring Standards, and all Local codes
    - Complete work area installation, including work area outlets, face plates and label
    - Complete TR installation. Hardware installation, correct labeling, installation, type and the complete installation of all wire management
    - Complete Backbone cable installation, termination and labeling
    - View a percentage of the actual field testing to ensure correct procedures are being adhered to and the proper test equipment is being used

Final sign off: IT/NCS will notify the project team of the successful completion of the communications contractor/installer and provide signatures as required acknowledging installation practices and materials utilized meet the current project specifications.

1.6 DELIVERY, STORAGE AND HANDLING

- Delivery and receipt of products shall be at the contractor’s main place of business/office.
- WMATA will not be responsible for the acceptance or delivery of any materials.
- Cable shall be stored according to manufacturer's recommendations as a minimum. In addition, cable must be stored in a location protected from vandalism and weather. If cable is stored outside, it must be covered with opaque plastic or canvas with provision for ventilation to prevent condensation and for protection from weather. If air temperature at cable storage location will be below 40 degrees F., the cable shall be moved to a heated (50 degrees F. minimum) location. If necessary, cable shall be stored off site at the contractor's expense.
- If the telecommunications contractor/installer wishes to have a trailer on site for storage of materials, arrangements shall be made with the Owner.

1.7 DRAWINGS

- It shall be understood that the electrical details and drawings provided with the specification package are diagrammatic. They are included to show the intent of the specifications and to aid the telecommunications contractor/installer in bidding the job. The telecommunications contractor/installer shall make allowance in the bid proposal to cover whatever work is required to comply with the intent of the plans and specifications.
- The telecommunications contractor/installer shall verify all dimensions at the site and be responsible for their accuracy.
- Prior to submission of any bid package, the telecommunications contractor/installer shall call to the attention of the Engineer of any materials or apparatus the telecommunications contractor/installer believes to be inadequate and to any necessary items of work omitted.

PART 2 – PRODUCTS

2.1 EQUIVALENT PRODUCTS

Due to the nature and type of communications, it is IT/NCS' preference that all products including but not limited to faceplates, jacks, patch panels, racks, 110 blocks, and patch cords, for the purpose of this document, shall be manufactured by Legrand/Ortronics. All copper and optical fiber cable products shall be manufactured by Superior Essex. However, substitutions meeting or exceeding the listed criteria may be submitted for review and approval. Any solution submitted must also be capable of providing a manufacturer's warranty equal to, or greater than the preferred Superior Essex-Legrand/Ortronics nCompass solution.

2.2 WORK AREA OUTLETS

Work area cables shall each be terminated at their designated work area location in the connector types described in section 1.4, Submittals.
The Telecommunications Outlet Assembly shall accommodate:

- A minimum of two (2) modular jacks
- Additional accommodations for specific locations as noted in the plans for optical fiber and/or additional copper cables as necessary.
- A blank filler will be installed when extra ports are not used.
- A dust cap shall be provided on all modular jacks with the circuit number on the identifier strip.
- Multiple jacks that are identified in close proximity on the drawings (but not separated by a physical barrier) <u>may not</u> be combined in a single assembly unless pre-approved through the use of a Request for Information (ROI). The telecommunications contractor/installer shall be responsible for determining the optimum compliant configuration based on the products proposed.
- The same orientation and positioning of jacks and connectors shall be utilized throughout the installation. Prior to installation, the telecommunications contractor shall submit the proposed configuration for each outlet assembly for review by the Owner.
- The modular jack shall incorporate printed label strip on the dust cap module for the purpose of identifying the outlet. Printed labels shall be permanent and compliant with ANSI/TIA–606-B standard specifications. Labels shall be printed using a printer such as a Brady hand held printer. Hand printed labels shall not be accepted.

Faceplates: The faceplates shall:

- Be as described in section 1.4, Submittals
- Be UL listed and CSA certified
- Be constructed of high impact, ABS plastic UL 94V-0 construction (except where noted otherwise)
- Shall match the faceplate color used for other utilities in the building or match the color of the raceway if installed in surface raceway
- Be compliant with the above requirements along with the following when incorporating optical

fiber
- Be a low profile assembly
- Incorporate a mechanism for storage of cable and fiber slack needed for termination
- Position the fiber optic couplings to face downward or at a downward angle to prevent contamination
- Incorporate a shroud that protects the optical couplings from impact damage
- Be available as single-gang or dual-gang
- Shall provide easy access for adds, moves, and changes by front removal of jack modules
- Possess recessed designation windows to facilitate labeling and identification
- Shall include a clear plastic cover to protect labels in the designation window
- Have mounting screws located under recessed designation windows
- Comply with ANSI/TIA-606-B work area labeling standard
- Allow for the UTP modules to be inverted in place for termination purposes

Voice / Data Jacks/Outlets
- Voice/Data jacks shall be 8-position modular jacks and shall be Category 6 performance as defined by the references in this document including ANSI/TIA-568-C.2. All pair combinations must be considered, with the worst-case measurement being the basis for compliance
- Be as described in section 1.4, Submittals
- The modular jack shall be backwards compatible to Category 3, 5, and 5e
- All horizontal category 6 user end outlet cable will be terminated on a category 6 rated patch panel
- User end outlets are utilized for both voice and/or data connectivity
- 568B pin out configuration to be used

2.3 110 COPPER TERMINATION BLOCK

The copper cross connect shall be a passive connection between the horizontal termination patch panels and the backbone termination blocks. The wall mount frames shall be field terminated kits including all blocks, connecting blocks, and designation strips. Management rings shall be mounted between vertical columns of blocks to provide management of cross-connect wire. Backbone blocks shall use 5-pair connecting blocks.

110 Block Kits shall
- Include both the wiring block in a 50, 100 and 300 pair footprint ;110ABC6050, 110ABC6100 AND 110ABC6300
- As described in section 1.4, Submittals
- Support termination of 22-24 AWG solid conductor
- Wiring block shall contain back openings for the feed through of cable
- Have color-coded tips on the wiring block and color coding on the connector blocks for installation identification
- Shall use standard termination practice requiring a single conductor 110 impact tool
- Termination hardware shall maintain the paired construction of the cable to facilitate minimum untwisting of the wires
- Be labeled in compliance with ANSI/TIA-606-B labeling specifications using permanent labels

110 Cross-Connect System Backboard Channels Shall
- Be available in 300 and 900 pair sizes
- Allow the mounting of 110 100-pair blocks without legs
- Include bottom trough and grounding bar
- Be wall mountable

110 Wall Mount Vertical Trough Shall
- Be available in single channel or dual channel configurations
- Be in dual channel configuration shall be used to provide separation for different wiring media
- Be available in 300 pair and 900 pair sizes
- Be wall mountable

- Be used with wall mountable backboard channels. Acceptable configurations include a 300 pair and a 900 pair

2.4 MODULAR PATCH PANELS

The Modular Patch Panels shall

- Meet category 6 component compliance
- Be as described in section 1.4, Submittals
- Require standard termination practices using a 110 impact tool
- Use a single piece IDC housing designed to accept larger Category 6 conductors
- Support both T568B and T568A wiring
- Include easy to follow wiring labels
- Include label fields
- Allow for the use of icons
- Include full length metal rear cable management
- Be available in standard or high density
- Be backward compatible to category 3, 5 and 5e

2.5 RACKS

All racks and wire management shall provide vertical cable management and support for the patch cords at the front of the rack and wire management, support, and protection for the horizontal cables inside the legs of the rack. Waterfall cable management shall be provided at the top of the rack for patch cords and for horizontal cables entering the rack channels for protection and to maintain proper bend radius and cable support. Wire management shall also be mounted above each patch panel and/or piece of equipment on the rack. The rack shall include mounting brackets for cable tray ladder rack to mount to the top of the rack. Velcro cable ties shall be provided inside the rack channels to support the horizontal cable. Rack shall be black in color to match the patch panels and cable management.

Free-Standing Rack

Free-standing rack shall:

- Provide the necessary strain relief, bend radius and cable routing for proper installation of high performance cross connect products, meeting all specifications of ANSI/TIA-568-C
- Have top cable trough with waterfall and built in patch/horizontal cable distribution separator
- Have EIA hole pattern on front and rear
- Be available with a 6.5” (165 mm) channel depth
- Be available with hook and loop straps for securing bulk cables inside the vertical U-channels
- Assemble as 19” (483 mm) or 23” (584 mm) with no additional hardware
- Be available with three styles of vertical patch cord management: interbay with latches, cable management rings, or finger duct with covers
- Provide floor and ceiling access for cable management and distribution
- Provide pre-drilled base for floor attachment of rack
- Rack height shall be specified as 7 ft / 2.13 m (44 rack units) or 4.0 ft/1.22 m (22 rack units)
- Be available with vertical cable management rings for cord routing organization and strain relief

Wall Mounted Rack

Wall mount rack shall:

- Provide the necessary strain relief, bend radius and cable routing for proper installation of high performance cross connect products, meeting all specifications of ANSI/TIA-568-C
- Have EIA hole pattern
- Be available with hook and loop straps for securing cables inside the vertical U-channels
- Be available with vertical U-channels to protect and conceal distribution cables
- Provide floor and ceiling access for cable management and distribution
- Have wall mount braces with locator posts for easy wall mounting

- Have side access points that allow for access to manage/install distribution cables in the vertical channels

2.6 HORIZONTAL DISTRIBUTION CABLE

All horizontal station cable shall terminate on modular patch panels (copper or fiber), or patch/splice cabinets (fiber) in their respective Telecommunications Room or Equipment Room as specified on the drawings. In all instances, unless otherwise specified, all horizontal user end outlet cables will be category 6 and terminate on an appropriate category 6 patch panel.

100 OHM Category 6 UNSHIELDED TWISTED PAIR CABLE (UTP)

Physical Characteristics:

- (For Plenum) shall be plenum rated and meet applicable requirements of ANSI/ICEA S-116-732-2013.
- UL listed and UL Verified Cat 6.
- All 4 pairs must be insulated with FEP.
- Be as described in section 1.4, Submittals
- The outer jacket shall be flame retardant, low smoke PVC.
- Shall be suitable for the environment in which they are to be installed.

Transmission Characteristics:

- Electrical transmission performance testing of a cabling configuration to the requirements of ANSI/TIA-568-C.2 Balanced Twisted-Pair Telecommunications Cabling and Component Standards for Category 6 Channel.
- Channel Margin Guarantees: Improved channel performance that exceeds the ANSI/TIA-568-C.2 standard. Margins supported over standard compliant channels from 7 to 100 meters.

Parameter	Margin vs. TIA-568-C.2
Insertion Loss	3%
NEXT	5 dB
PSNEXT	5 dB
Return Loss	3 dB
ACRF	5 dB
PSACRF	5 dB
ACR	5 dB
PSACR	5 dB

2.7 HORIZONTAL AND BACKBONE CABLE

Premise Optical Fiber Plenum (OFNP) Tight Buffered With Laser Optimized OM3 50/125 Optical Fibers

Each Multimode Fiber shall be:

- Graded-index Multi-mode optical fiber wave-guide with TeraFlex Bend Resistant Laser Optimized 50/125um-core/cladding.
- Be as described in section 1.4, Submittals
- Shall comply with the requirements of the latest revision of ICEA S-83-596.
- Attenuation shall be measured in accordance with the latest revision of TIA-455-78-B.
- Information transmission capacity shall be measured in accordance with the latest revision of TIA-455-220-A.
- Maximum attenuation dB/Km @ 850/1300 nm: Per manufacturer’s specifications

Physical Characteristics:

- Shall be suitable for use in intra-building backbone, conduit pathways and service entrance to communication closet applications.
- Shall be suitable for use in risers, plenums and horizontal applications.
- Shall be available with a fiber strand count range from 6 to 144.
- Shall have and be marked with an UL-OFNP (OFCP if armored) and OFN (OFC if armored) FT6 Flame Rating.
- Strength members shall be dielectric aramid yarn.
- Subunits shall be numbered and color-coded in accordance with the latest TIA-598-C with an overall aqua jacket.
- Subunits shall be manufactured with a reverse oscillating lay (ROL) stranded around a flexible high-strength glass reinforced rod.
- Suitable for operation between -20°C to +75°C for riser and 0°C to +75°C for plenum
- Shall be available in Aluminum Interlock Armor construction as needed

Premise Optical Fiber Plenum (OFNP) Tight Buffered With Enhanced (Low Water Peak) Single-mode Optical Fibers

Each Single-mode Fiber shall be:

- Class IVa dispersion - unshifted single mode optical fibers with TeraFlex Bend Resistant G657.A1 complying with the latest revision of ANSI/ICEA S-83-596.
- Be as described in section 1.4, Submittals
- The zero dispersion wavelengths shall be between 1300 nm and 1324 nm. The ANSI/TIA-455-175-B maximum value of the dispersion slope shall be no greater than 0.090 ps/km-nm2. Dispersion measurements shall be made in accordance with the latest revision of ANSI/TIA-455-175.

Transmission Characteristics:

- Maximum cabled attenuation dB/km @ 1310/1550 nm: 0.5/0.4
- The cabled cutoff wavelength shall be ≤1260 nm when measured in accordance with the latest revision of ANSI/TIA-455-80.

Physical Characteristics:

- Shall be suitable for use in intra-building backbone, conduit pathways and service entrance to communication closet applications.
- Shall be suitable for use in risers, plenums and horizontal applications.
- Shall be available with a fiber strand count range from 6 to 144.
- Shall have and be marked with an UL-OFNP and OFN FT6 Flame Rating.
- Shall comply with the requirements of the latest revision of ANSI/ICEA S-83-596.
- Strength members shall be dielectric aramid yarn.
- Subunits shall be numbered and color-coded in accordance with TIA-598-C with an overall aqua jacket.
- Subunits shall be manufactured with a reverse oscillating lay (ROL) stranded around a flexible high-strength glass reinforced rod.
- Suitable for operation between -20°C to +75°C for riser and 0°C to +75°C for plenum
- Shall be available in Aluminum Interlock Armor construction as needed

Indoor/Outdoor Optical Fiber Plenum (OFNP) With Laser Optimized 50/125 Optical Fibers

Each Multimode Fiber shall be:

- Graded-index Multi-mode optical fiber wave-guide with TeraFlex Bend Resistant Laser Optimized 50/125um-core/cladding.
- Be as described in section 1.4, Submittals
- Shall comply with the latest revision of ANSI/TIA-492AAAB.

- Shall comply with the latest revision of ANSI/ICEA S-104-696.
- Attenuation shall be measured in accordance with the latest revision of ANSI/TIA-455-78.
- Information transmission capacity shall be measured in accordance with the latest revision of ANSI/TIA-455-220.
- Maximum attenuation dB/km @ 850/1300 nm: Per manufacturer's specifications

Physical Characteristics:
- Shall be available in either tight buffered or loose tube construction for use in both outdoor and indoor applications without the use of a transition at the building entrance.
- Shall be suitable for use in risers, plenums and horizontal applications.
- Shall have a dry water blocking system for cable core and buffer tubes.
- Shall be available with a fiber strand count range from 6 to 144.
- Shall have and be marked with an UL-OFNP (OFCP for armored) and OFN (OFC for armored) FT6 Flame Rating.
- Shall comply with the requirements of the latest revision of ANSI/ICEA S-104-696.
- Strength members shall be dielectric.
- Suitable for underground or above ground conduits.
- Cable shall be color coded in accordance with the latest revision of ANSI/TIA-598 with an overall black jacket.
- Suitable for operation between -40°C to +70°C
- Shall be UV resistant
- Shall be available in either aluminum interlock or steel construction armor.

Indoor/Outdoor Optical Fiber Plenum (OFNP) With Enhanced (Low Water Peak) Single-mode Optical Fibers

Each Single-mode Fiber shall be:
- Class IVa dispersion - unshifted single mode optical fibers with TeraFlex Bend Resistant G657.A1 complying with the latest revision of ANSI/ICEA S-104-696.
- Be as described in section 1.4, Submittals
- The zero dispersion wavelengths shall be between 1300 nm and 1320 nm. The ANS/TIA-455-168 maximum value of the dispersion slope shall be no greater than 0.090 ps/km-nm2. Dispersion measurements shall be made in accordance with the latest revision of ANSI/TIA-455-175.

Transmission Characteristics:
- Maximum cabled attenuation dB/km @ 1310/1550 nm: 0.5/0.4
- The cabled cutoff wavelength shall be ≤1260 nm when measured in accordance with the latest revision of ANSI/TIA-455-80.

Physical Characteristics:
- Shall be available in either tight buffered or loose tube construction for use in both outdoor and indoor applications without the use of a transition at the building entrance.
- Shall be suitable for use in risers, plenums and horizontal applications.
- Shall have a dry water blocking system for cable core and buffer tubes.
- Shall be available with a fiber strand count range from 6 to 144.
- Shall have and be marked with an OFNP (OFCP for armored) and OFN (OFC for armored) FT-6 Flame Rating.
- Shall comply with the latest revision of ANSI/ICEA S-104-696.
- Strength members shall be dielectric.
- Suitable for underground or above ground conduits.
- Cable shall be color coded in accordance with the latest revision of ANSI/TIA-598 with an overall black jacket.
- Shall have a ripcord for overall jacket.
- Suitable for operation between -40ºC to +70º C

- Shall be UV resistant
- Shall be available in either aluminum interlock or steel construction armor.

Indoor/Outdoor Optical Fiber Low Smoke Zero Halogen (LSZH) Loose Tube with Laser Optimized OM3 50/125um Optical Fibers - use in NFPA-130 required environments

Each Multimode Fiber shall be:

- Graded-index Multi-mode optical fiber wave-guide with TeraFlex Bend Resistant Laser Optimized 50/125um-core/cladding.
- Be as described in section 1.4, Submittals
- Shall comply with the latest revision of ANSI/ICEA S-104-696-2013.
- Attenuation shall be measured in accordance with the latest revision of ANSI/TIA-455-78.
- Information transmission capacity shall be measured in accordance with the latest revision of ANSI/TIA-455-220.
- Maximum attenuation dB/Km @ 850/1300 nm: Per manufacturer's specifications

Physical Characteristics:

- Shall be suitable for use in NFPA-130 tunnel, subway passages and passage station environments both outdoor and indoor applications without the use of a transition at the building entrance.
- Shall be suitable for use in low smoke zero halogen applications.
- Shall have a dry, fully water blocked core and buffer tubes water blocked with PFM.
- Shall be available with a fiber strand count range from 6 to 288.
- Shall have and be marked with an UL-1666 and OFNG-LS (OFCG-LS for armored) Flame Rating.
- Shall comply with the requirements of the latest revision of ANSI/ICEA S-104-696.
- Strength members shall be dielectric and may be aramid yarn.
- Suitable for underground or above ground conduits.
- Loose Tube fibers shall be color coded in accordance with TIA-598-C with an overall black jacket.
- Suitable for operation between -40°C to +70°C
- Shall be flame and sunlight resistant
- Shall be available in Corrugated Steel Armor construction as needed.

Indoor/Outdoor Optical Fiber Plenum (OFNP) Loose Tube with Enhanced (Low Water Peak) Single-mode Optical Fibers - use in NFPA-130 required environments

Each Single-mode Fiber shall be:

- Class IVa dispersion - unshifted single mode optical fibers with TeraFlex Bend Resistant G657.A1 complying with the latest revision of ANSI/ICEA S-104-696.
- Be as described in section 1.4, Submittals
- The zero dispersion wavelengths shall be between 1300 nm and 1320 nm. The ANSI/TIA-455-168 maximum value of the dispersion slope shall be no greater than 0.090 ps/km-nm2. Dispersion measurements shall be made in accordance with the latest revision of ANSI/TIA-455-169 or ANSI/TIA-455-175.

Transmission Characteristics:

- Maximum cabled attenuation dB/km @ 1310/1550 nm: 0.5/0.4
- The cabled cutoff wavelength shall be ≤1260 nm when measured in accordance with the latest revision of ANSI/TIA-455-80.

Physical Characteristics:

- Shall be suitable for use in NFPA-130 tunnel, subway passages and passage station environments both outdoor and indoor applications without the use of a transition at the building entrance
- Shall be suitable for use in low smoke zero halogen applications.
- Shall have a dry, fully water blocked core and buffer tubes water blocked with PFM.
- Shall be available with a fiber strand count range from 6 to 288.

- Shall have and be marked with an UL-1666 and OFNG-LS (OFCG-LS for armored) Flame Rating.
- Shall comply with the latest revision of ANSI/ICEA S-104-696.
- Strength members shall be aramid/yarn.
- Suitable for underground or above ground conduits.
- Loose Tube fibers shall be color coded in accordance with TIA-598-C with an overall black jacket.
- Suitable for operation between -40°C to +70°C
- Shall be flame and sunlight resistant
- Shall be available in Corrugated Steel Armor construction as needed.

2.8 FIBER OPTIC CONNECTORS

Each Fiber Connector shall:

- WMATA's standard multimode and singlemode fiber optic connector is the SC style connector
- Be available in singlemode and multimode versions
- Be as described in section 1.4, Submittals
- Accept a nominal fiber diameter of 125 micrometers
- Have a typical insertion loss of 0.3 dB for multimode and 0.2 dB for singlemode
- Be stable over an operating range of –40C to +75 degrees C.

2.9 COPPER CABLE PROTECTION UNITS

All copper circuits shall be provided with protection between each building with an entrance cable protector panel. See section 2.11 for additional requirements. All building-to-building circuits shall be routed through this protector. The protector shall be connected with a #6 AWG copper bonding conductor between the protector ground lug and the TC ground point.

2.10 PATCH CORDS

The contractor shall provide factory terminated and tested UTP and optical fiber patch cords and equipment cords for the complete cabling system. The UTP patch cables shall meet the requirements of ANSI/TIA/ -568-C for patch cord testing.

Copper (UTP) patch cords shall:

- Be as described in section 1.4, Submittals
- Be category 6 patch cord with Paralign 2 Plug Design.
- Use 8 position connector with impedance matched contacts and designed using dual reactance.
- Be constructed of 100 ohm, 4 pair, 24 AWG, stranded conductor, unshielded twisted pair copper per the requirements of the ANSI/TIA-568-C.2 and ANSI/TIA-568-C.2–1 standard.
- Meet TIA category 6 component specifications in ANSI/TIA-568-C.2-1
- 100% factory tested to meet category 6 performance
- Be capable of universal T568A or T568B wiring schemes.
- Modular connector shall maintain the paired construction of the cable to facilitate minimum untwisting of the wires.
- Have a performance marking indelibly labeled on the jacket (by the manufacturer).
- Have the ability to accept color-coded labels and icons to comply with ANSI/TIA-606-B labeling specifications.
- Have "snagless" protection for the locking tab to prevent snagging and to protect locking tab in tight locations and provide bend relief
- Be backwards compatible to Category 3, 5 and 5e

Optical Fiber patch cords shall:

- Contain two (2) optical fibers.
- Be as described in section 1.4, Submittals

- Include listing of actual loss of patch cord when packaged

2.11 BONDING AND GROUNDING

The facility shall be equipped with a Telecommunications Bonding Backbone (TBB). This backbone shall be used to ground all telecommunications cable shields, equipment, racks, cabinets, raceways, and other associated hardware that has the potential to act as a current carrying conductor. The TBB shall be installed independent of the building's electrical and building ground and shall be designed in accordance with the recommendations contained in the ANSI/TIA-607 Telecommunications Bonding and Grounding Standard.

- The main entrance facility/equipment room in each building shall be equipped with a telecommunications main grounding bus bar (TMGB).
- Each telecommunications room shall be provided with a telecommunications ground bus bar (TGB).
- The TMGB shall be connected to the building electrical entrance grounding facility. The intent of this system is to provide a grounding system that is equal in potential to the building electrical ground system. Therefore, ground loop current potential is minimized between telecommunications equipment and the electrical system to which it is attached.
- All racks, metallic backboards, cable sheaths, metallic strength members, splice cases, cable trays, etc. entering or residing in the TR or ER shall be grounded to the respective TGB or TMGB using a minimum #6 AWG stranded copper bonding conductor and compression connectors.
- All wires used for telecommunications grounding purposes shall be identified with a green insulation. Non-insulated wires shall be identified at each termination point with a wrap of green tape.
- All cables and bus bars shall be identified and labeled in accordance with the System Documentation Section of this specification.

2.12 FIRESTOP

A fire stop system is comprised of the item or items penetrating the fire rated structure, the opening in the structure and the materials and assembly of the materials used to seal the penetrated structure. Fire stop systems comprise an effective block for fire, smoke, heat, vapor and pressurized water stream.

- All penetrations through fire-rated building structures (walls and floors) shall be sealed with an appropriate fire stop system. This requirement applies to through penetrations (complete penetration) and membrane penetrations (through one side of a hollow fire rated structure). Any penetrating item i.e., riser slots and sleeves, cables, conduit, cable tray, and raceways, etc. shall be properly fire stopped.
- Fire stop systems shall be UL Classified to ASTM E814 (UL 1479) and shall be approved by a qualified Professional Engineer (PE), licensed (actual or reciprocal) in the state where the work is to be performed.
- A drawing showing the proposed fire stop system, stamped/embossed by the PE shall be provided to the Owner's Technical Representative prior to installing the fire stop system(s).

PART 3- EXECUTION

3.1 WORK AREA OUTLETS

Cables shall be coiled in the in-wall or surface-mount boxes if adequate space is present to house the cable coil without exceeding the manufacturer's bend radius. In hollow wall installations where box-eliminators are used, excess wire can be stored in the wall. No more than 12" of UTP and 36" of fiber slack shall be stored in an in-wall box, modular furniture raceway, or insulated walls. Excess slack shall be loosely coiled and stored in the ceiling above each drop location when there is not enough space present in the outlet box to store slack cable.

- Cables shall be dressed and terminated in accordance with the recommendations made in the ANSI/TIA/EIA-568-C.1 document, manufacturer's recommendations and best industry practices.
- Pair untwist at the termination shall not exceed 12 mm (one-half inch).
- Bend radius of the horizontal cable shall not be less than 4 times the outside diameter of the cable.
- The cable jacket shall be maintained to within 25mm (one inch) of the termination point.

All Work Area design and installation practices should adhere to the BICSI TDMM 13th Edition Chapter 3.

3.2 TELECOMMUNICATIONS SPACES

Telecommunications spaces are defined as:

- Telecommunications enclosure (TE)
- Telecommunications room (TR)
- Equipment room (ER)
- Entrance facility (EF)

Conduit Pathways between any of these spaces must be at minimum 4in (EMT) in size. The amount of these conduits must be calculated using a 40% fill ratio and maintaining at least 50% vacancy after completion. All design and installation practices should adhere to the BICSI TDMM 13th Edition Chapter 6. This should include but is not limited to location, sizing, conditioning, fire protection, flood protection, floor loading, grounding, lighting, physical protection & EMI.

3.3 HORIZONTAL DISTRIBUTION SYSTEMS

The horizontal distribution system consists of two basic elements—the horizontal pathways and related spaces, and the horizontal cabling system.

Horizontal pathways include:

- Physical pathways (e.g., conduit and cable tray) used for containment of telecommunications cabling.
- Non-physical pathways (e.g., the space between open-top cable supports [J-hooks]) through which cable is placed between physical support or containment components.

Horizontal pathways consist of structures that conceal, protect, support, and provide access to horizontal cables between the telecommunications outlet/connector used to connect work area equipment at the work area and HC (FD) in the serving TR or TE.
All horizontal distribution systems design and installation practices should adhere to the BICSI TDMM 13th Edition Chapter 4.

3.4 HORIZONTAL DISTRIBUTION CABLE INSTALLATION

- Cable shall be installed in accordance with manufacturer's recommendations and best industry practices.
- A pull cord (nylon; 1/8" minimum) shall be co-installed with all cable installed in any conduit.
- Cable raceways shall not be filled greater than the ANSI/TIA/-569-C maximum fill for the particular raceway type or 40%.
- Cables shall be installed in continuous lengths from origin to destination (no splices) except for transition points, or consolidation points.
- Where transition points or consolidation points are allowed, they shall be located in accessible locations and housed in an enclosure intended and suitable for the purpose.
- The cable's minimum bend radius and maximum pulling tension shall not be exceeded.
- If a J-hook or trapeze system is used to support cable bundles all horizontal cables shall be supported at a maximum of 48 to 60 inch (1.2 to 1.5 meter) intervals. At no point shall cable(s) rest on acoustic ceiling grids or panels.
- Horizontal distribution cables shall be bundled in groups of no more than 50 cables. Cable bundle quantities in excess of 50 cables may cause deformation of the bottom cables within the bundle and degrade cable performance.
- Cable shall be installed above fire-sprinkler systems and shall not be attached to the system or any ancillary equipment or hardware. The cable system and support hardware shall be installed so that it does not obscure any valves, fire alarm conduit, boxes, or other control devices.
- Cables shall not be attached to ceiling grid or lighting fixture wires. Where support for horizontal cable is required, the contractor/installer shall install appropriate carriers to support the cabling.
- Any cable damaged or exceeding recommended installation parameters during installation shall be replaced by the contractor prior to final acceptance at no cost to the Owner.
- Cables shall be identified by a self-adhesive label in accordance with the System Documentation Section of this specification and ANSI/TIA-606-B. The cable label shall be applied to the cable behind the faceplate on a section of cable (within 6" of termination) that can be accessed by removing the cover plate.
- Unshielded twisted pair cable shall be installed so that there are no bends smaller than four times the cable outside diameter at any point in the run and at the termination field.
- Pulling tension on 4-pair UTP cables shall not exceed 25-lbf for a four-pair UTP cable.

All horizontal distribution systems design and installation practices should adhere to the BICSI TDMM 13th Edition Chapter 4 & BICSI ITISM Chapter 4.

3.5 HORIZONTAL CROSS CONNECT INSTALLATION

- Cables shall be dressed and terminated in accordance with the recommendations made in the ANSI/TIA-568-C standard, manufacturer's recommendations and best industry practices.
- Pair untwist at the termination shall not exceed 13 mm (0.5 inch). Untwist should be as close to zero as possible.
- Bend radius of the cable in the termination area shall not exceed 4 times the outside diameter of the cable.
- Cables shall be neatly bundled and dressed to their respective panels or blocks. Each panel or block shall be fed by an individual bundle separated and dressed back to the point of cable entrance into the rack or frame.
- The cable jacket shall be maintained as close as possible to the termination point.
- Each cable shall be clearly labeled on the cable jacket behind the patch panel at a location that can be viewed without removing the bundle support ties. Cables labeled within the bundle, where the label is obscured from view shall not be acceptable.

All horizontal distribution systems design and installation practices should adhere to the BICSI TDMM 13th Edition Chapter 4.

3.6 OPTICAL FIBER TERMINATION HARDWARE

- Fiber slack shall be neatly coiled within the fiber splice tray or enclosure. No slack loops shall be allowed external to the fiber panel.
- Each cable shall be individually attached to the respective splice enclosure by mechanical means. The cables strength member shall be securely attached the cable strain relief bracket in the enclosure.
- Each fiber bundle shall be stripped upon entering the splice tray and the individual fibers routed in the splice tray.
- Each cable shall be clearly labeled at the entrance to the splice enclosure. Cables labeled within the bundle shall not be acceptable.
- A maximum of 12 strands of fiber shall be spliced in each tray
- All spare strands shall be installed into spare splice trays.
- All connectors shall be mechanically installed. No pigtail splices without prior approval.

All fiber optic termination practices should adhere to the BICSI ITSIM Chapter 6.

3.7 BACKBONE CABLE INSTALLATION

- Backbone cables shall be installed separately from horizontal distribution cables
- A pull cord (nylon; 1/8" minimum) shall be co-installed with all cable installed in any conduit.
- Where cables are housed in conduits, the backbone and horizontal cables shall be installed in separate conduits
- Where backbone cables are installed in an air return plenum, riser rated cable shall be installed in metallic conduit.
- Where backbone cables and distribution cables are installed in a cable tray or wire way, backbone cables shall be installed first and bundled separately from the horizontal distribution cables.
- All backbone cables shall be securely fastened to the sidewall of the TR on each floor.
- Backbone cables spanning more than three floors shall be securely attached at the top of the cable run with a wire mesh grip and on alternating floors or as required by local codes.
- Vertical runs of cable shall be supported to messenger strand, cable ladder, or other method to provide proper support for the weight of the cable.
- Large bundles of cables and/or heavy cables shall be attached using metal clamps and/or metal banding to support the cables.

All backbone distribution systems design and installation practices should adhere to the BICSI TDMM 13th Edition Chapter 5.

3.8 COPPER TERMINATION HARDWARE

- Cables shall be dressed and terminated in accordance with the recommendations made in the ANSI/TIA-568-C standard, manufacturer's recommendations and best industry practice.
- Pair untwist at the termination shall not exceed 12 mm (one-half inch). Keep untwist as close to zero as possible.
- Bend radius of the cable in the termination area shall not exceed 4 times the outside diameter of the cable.
- Cables shall be neatly bundled and dressed to their respective panels or blocks. Each panel or block shall be fed by an individual bundle separated and dressed back to the point of cable entrance into the rack or frame.
- The cable jacket shall be maintained to within 25 mm (one inch) of the termination point.
- Each cable shall be clearly labeled on the cable jacket behind the patch panel at a location that can be viewed without removing the bundle support ties. Cables labeled within the bundle, where the label is obscured from view shall not be acceptable.

All copper cable termination practices should adhere to the BICSI ITSIM Chapter 6.

3.9 RACKS

- Racks shall be securely attached to the concrete floor using the provided hardware or as required by local codes.
- Isolation pads and/or isolation spacer shall be used in all railway stations, TPSS, and TBS locations.
- Nonmetallic hardware shall be used to secure racks to flooring in all railway stations, TPSS, and TBS locations.
- Racks shall be placed with a minimum of 36 inch clearance from the walls on all sides of the rack. When mounted in a row, maintain a minimum of 36 inches from the wall behind and in front of the row of racks and from the wall at each end of the row.
- All racks shall be grounded to the telecommunications ground bus bar in accordance with Section 2.11 of this document.
- Rack mount screws not used for installing patch panels and other hardware or accessories shall be bagged and left with the rack upon completion of the installation.
- Wall mounted termination block fields shall be mounted on 4’ x 8’ x .75” void free plywood. The plywood shall be mounted vertically 12” above the finished floor. The plywood shall be painted with two coats of white fire retardant paint.
- Wall mounted termination block fields shall be installed with the highest point not to exceed 5’6” above the finished floor and with the lowest edge of the mounting frame 18” from the finished floor.

3.10 FIRESTOP SYSTEM

- All fire stop systems shall be installed in accordance with the manufacturer’s recommendations and shall be completely installed and available for inspection by the local inspection authorities prior to cable system acceptance. UL Classified Fire stop Systems are to be included in the submittals.

All fire stopping practices should adhere to the BICSI TDMM 13th Edition Chapter 7 & BICSI ITSIM Chapter 5.

3.11 GROUNDING SYSTEM

- The TBB shall be designed and/or approved by a qualified PE, licensed in the state that the work is to be performed. The TBB shall adhere to the recommendations of the ANSI/TIA-607-B standard, and shall be installed in accordance with best industry practice.
- Installation and termination of the main bonding conductor to the building service entrance ground shall be performed by a licensed electrical contractor.

All Bonding and Grounding design and installation practices should adhere to the BICSI TDMM 13th Edition Chapter 8.

3.12 IDENDIFICAITON AND LABELING

- The contractor shall develop and submit for approval a labeling system for the cable installation. The Owner will negotiate an appropriate labeling scheme in conjunction with the installer/contractor.
- At a minimum, the labeling system shall clearly identify all components of the system: racks, cables, panels and outlets.
- The labeling system shall designate the cables origin and destination and a unique identifier for the cable within the system.
- Racks and patch panels shall be labeled to identify the location within the cable system infrastructure.
- All labeling information shall be recorded on the as-built drawings and all test documents shall reflect the appropriate labeling scheme.
- Labeling shall follow the guidelines of ANSI/TIA-606-B.

- All label printing will be machine generated with Legrand/Ortronics templates using indelible ink ribbons or cartridges or equivalent.
- Self-laminating labels will be used on cable jackets, appropriately sized to the OD of the cable, and placed within view at the termination point on each end.
- Outlet, patch panel and wiring block labels shall be installed on or in the space provided on the device.

All identification and labeling practices should adhere to the BICSI TDMM 13th Edition Chapter 10.

3.13 TESTING AND ACCEPTANCE

General

- All cables and termination hardware shall be 100% tested for defects in installation and to verify cabling system performance under installed conditions according to the requirements of ANSI/TIA-568-C.
- All pairs of each installed cable shall be verified prior to system acceptance.
- Any defect in the cabling system installation including but not limited to cable, connectors, feed through couplers, patch panels, and connector blocks shall be repaired or replaced in order to ensure 100% useable conductors in all cables installed.
- All cables shall be tested in accordance with this document, the latest revision of the ANSI/TIA standards, and best industry practice. If any of these are in conflict, the Contractor/Installer shall bring any discrepancies to the attention of this office for clarification and resolution.

Copper Channel Testing

- All twisted-pair copper cable links shall be tested for continuity, pair reversals, shorts, opens and performance as indicated below. Additional testing is required to verify Category performance.
- Horizontal cabling shall be tested using a Level III test unit for category 6 performance compliance.
- The basic tests required are:
    - Wire Map
    - Length
    - Attenuation
    - NEXT (Near end crosstalk)
    - Return Loss
    - ELFEXT Loss
    - Propagation Delay
    - Delay skew
    - PSNEXT (Power sum near-end crosstalk loss)
    - PSELFEXT (Power sum equal level far-end crosstalk loss)

Continuity

- Each pair of each installed cable shall be tested using a test unit that shows opens, shorts, polarity and pair-reversals, crossed pairs and split pairs.
- Shielded/screened cables shall be tested with a device that verifies shield continuity in addition to the above stated tests.
- The test shall be recorded as pass/fail as indicated by the test unit in accordance with the manufacturers' recommended procedures, and referenced to the appropriate cable identification number and circuit or pair number.
- Any faults in the wiring shall be corrected and the cable re-tested prior to final acceptance.

Length

- Each installed cable link shall be tested for installed length using a TDR type device.
- The cables shall be tested from patch panel to patch panel, block to block, patch panel to outlet or block to outlet as appropriate.

- The cable length shall conform to the maximum distances set forth in the ANSI/TIA-568-C Standard.
- Cable lengths shall be recorded, referencing the cable identification number and circuit or pair number.
- For multi-pair cables, the shortest pair length shall be recorded as the length for the cable.

Category 6 Performance

Shall meet the channel requirements outlined below for a 100-meter, 4-connector channel. Frequency (MHz)	Maximum Insertion Loss (dB)	Minimum NEXT (dB)	Minimum PSNEXT (dB)	Minimum ELFEXT (dB)	Minimum PSELFEXT (dB)	Minimum Return Loss (dB)
1.0	2.1	70.0	67.0	68.3	65.3	24.0
4.0	4.0	68.0	65.5	56.2	53.2	24.0
10.0	6.3	61.6	59.0	48.3	45.3	24.0
20.0	9.0	56.6	54.0	42.2	39.2	24.0
31.25	11.3	53.4	50.7	38.4	35.4	22.1
62.5	16.4	48.4	45.6	32.3	29.3	19.1
100.0	21.2	44.9	42.1	28.3	25.3	17.0
155.0	26.6	41.7	38.8	24.4	21.4	15.1
200.0	31.5	39.8	36.9	22.2	19.2	14.0
250.0	36.0	38.1	35.2	20.3	17.3	13.0

Fiber Testing

- All fiber testing shall be performed on all fibers in the completed end-to-end system.
- There shall be no splices unless clearly defined in an RFI.
- Testing shall be conducted in accordance with the latest revision of TIA-526-7, Method B for single-mode fibers.
- Test shall be conducted in accordance with the latest revision of ANSI/TIA-526-14 Standard for multimode fibers.
- System loss measurements shall be provided at 850 and1300 nanometers for multimode fibers and 1310 and1550 nanometers for single mode fibers.
- These tests also include continuity checking of each fiber.
- Backbone multimode fiber cabling shall be tested at both 850 nm and 1300 nm (or 1310 and 1550 nm for single-mode) in both directions.
- Where links are combined to complete a circuit between devices, the Contractor/Installer shall test each link from end to end to ensure the performance of the system. ONLY LINK TEST IS REQUIRED.
- The contractor/installer can optionally install patch cords to complete the circuit and then test the entire channel.
- The test method shall be the same used for the test described above. The values for calculating loss shall be those defined in the latest revision of the ANSI/TIA Standard.
- Attenuation testing shall be performed with an approved hand held tester from an industry recognized test equipment manufacturer.

All field testing practices should adhere to the BICSI, TDMM 13th Edition Chapter 11.

3.14 SYSTEM DOCUMENTATION

- Upon completion of the installation, the telecommunications contractor/installer shall provide three (3) full documentation sets to the Engineer for approval. Documentation shall include the items detailed in the sub-sections below.
- Manufacturer's original certificate of origin with each fiber's factory attenuation results must be submitted. In the event the "birth certificate" was destroyed or lost the contractor/installer is responsible for contacting the factory of origin for a certified duplicate copy.
- Documentation shall be submitted within ten (10) working days of the completion of each testing phase (e.g. subsystem, cable type, area, floor, etc.). This is inclusive of all test result and draft as-built drawings.
- Draft drawings may include annotations done by hand. Machine generated (final) copies of all drawings shall be submitted within 30 working days of the completion of each testing phase.
- At the request of the Engineer, the telecommunications contractor/installer shall provide copies of the original test results.
- The Engineer may request that a 10% random field re-test be conducted on the cable system, at no additional cost, to verify documented findings.
- Tests shall be a repeat of those defined above. If findings contradict the documentation submitted by the telecommunications contractor, additional testing can be requested to the extent determined necessary by the Engineer, including a 100% re-test. This re-test shall be at no additional cost to the Owner.

3.15 TEST RESULTS

- Test documentation shall be provided on compact disk within three weeks after the completion of the project.
- The disk shall be clearly marked on the outside front cover with the words "Project Test Documentation", the project name, and the date of completion (month and year).
- The results shall include a record of test frequencies, cable type, conductor pair and cable (or outlet) I.D., measurement direction, reference setup, and crew member name(s).
- The test equipment name, manufacturer, model number, serial number, software version and last calibration date will also be provided at the end of the document. Unless the manufacturer specifies a more frequent calibration cycle, an annual calibration cycle is anticipated on all test equipment used for this installation.
- The test document shall detail the test method used and the specific settings of the equipment during the test as well as the software version being used in the field test equipment.
- The field test equipment shall meet the requirements of latest revision of ANSI/TIA-568-C including applicable TSB's and amendments.
- The appropriate Level III tester shall be used to verify Category 6 cabling systems.
- Printouts generated for each cable by the wire (or fiber) test instrument shall be submitted as part of the documentation package.
- The telecommunications contractor/installer must furnish this information in electronic form (CD-ROM) or acceptable pre-approved media.
- When repairs and re-tests are performed, the problem found and corrective action taken shall be noted, and both the failed and passed test data shall be documented.
- When repairs and re-tests are performed, the problem found and corrective action taken shall be noted, and both the failed and passed test data shall be documented.

3.16 AS-BUILT DRAWINGS

- The drawings are to include cable routes and outlet locations.
- Outlet locations shall be identified by their sequential number as defined elsewhere in this document.
- Numbering, icons, and drawing conventions used shall be consistent throughout all documentation provided.
- The Owner will provide floor plans in paper and electronic (DWG, AutoCAD rel. 14) formats on which as-built construction information can be added.
- These documents will be modified accordingly by the telecommunications contractor/installer to denote as-built information as defined above and returned to the Owner.
- The Contractors shall annotate the base drawings and return a hard copy (same plot size as originals) and electronic (AutoCAD rel. 14) form.

PART 4-WARRANTY AND SERVICES

Warranty

- An Extended Product Warranty shall be provided which warrants functionality of all components used in the system for 25 years from the date of registration. The Extended Product Warranty shall warrant the installed horizontal and/or backbone copper, and both the horizontal and the backbone optical fiber portions of the cabling system.
- The Application Assurance Warranty shall cover the failure of the wiring system to support the applications that are designed for the link/channel specifications of ANSI/TIA–568-C.1. These applications include, but are not limited to, 10BASE-T, 100BASE-T, 1000BASE-T, and 155 Mb/s ATM.
- The contractor/installer shall provide a warranty on the physical installation.

Final Acceptance & System Certification

- Completion of the installation, in-progress and final inspections, receipt of the test and as-built documentation, and successful performance of the cabling system for a two week period will constitute acceptance of the system.
- Upon successful completion of the installation and subsequent inspection, the end user shall be provided with a numbered certificate, from the cable and connectivity manufacturers, registering the installation.

PART 5 - INSTALLATION AND DESIGN PRACTICES

All installation practices will adhere to the Building Industry Consulting Service International (BISCI) Telecommunications Distribution Methods Manual (TDMM) Thirteenth edition, as well as the Information Transport Systems Installation Manual (ITSIM) & Outside Plant Design Reference Manual (OPDRM). These BISCI manuals shall take precedence in any situation regarding design and installation practices.

PART 6 - SAFETY

It is the responsibility of the user of this document to determine the use of applicable safety and health practices (e.g., WMATA's MSRPH [Metrorail Safety Rules and Procedures Handbook], Occupational Safety and Health Administration [OSHA], *National Electrical Code*® [*NEC*®], *National Electrical Safety Code*® [*NESC*®] associated with telecommunications systems installation and design practices. No project is so important, nor any completion deadline so critical as to justify nonconformance to industry safety standards.

SECTION 28 40 02 (16602)

REMOTE TERMINAL UNIT (RTU)
FOR POWER SCADA SYSTEMS

PART 1 - GENERAL

1.01 SUMMARY

A. This section provides requirements for vendors who will design, manufacture, supply, install and configure Remote Terminal Units (RTU) required for Supervisory Control and Data Acquisition (SCADA).

B. The specification also defines requirements for Remote Terminal Unit, establishes functional and performance requirements for selection and system design of RTUs to be incorporated into the WMATA electrical SCADA network.

C. This specification is applicable to all new SCADA system RTU and to those that are replacing existing RTUs.

D. The RTU interfaces to the electrical, Mechanical and devices in a passenger station, TBS, TPSS and monitor the status of the system via digital and analogue inputs. This data is transferred to the master stations located at the Carmen Turner Facility (CTF) and Jackson Graham Building (JGB) using DNP3 communication protocol over fiber optic cable.

E. The RTU interfaces into Intelligent Electronic Devices (IEDs) such as Distributed Input Output (DIO) and electrical protection relays, provides for control outputs to switch circuit breakers, lighting contactors.

F. The provided RTU shall be capable of working with the following relevant DNP3, Modbus and IEC 61850 family of protocols for direct data transmission through permanent direct links with devices in substations and DNP3 protocol for data transmission between RTU and Master Stations through TCP/IP.

G. Provide at the time of bid, a certificate from an independent testing company that the RTU software IEC61850 stack has been tested and has not shown to be non-conforming to IEC 61850 communication networks and systems in substation.

H. RTU provided shall be configured as a Data Concentrator where the RTU manages the communications and polling regimes to other remote devices. The SCADA masters communicate with only the data concentrator. The data concentrator acts an intermediate between the master stations and the end devices.

I. In addition, an industrial computer is provided with the RTU to run the Human Machine Interface

(HMI) software), the Digital Trace Recorder (DTR) and other application software

J. Related Sections:
   1. Section 28 40 00 (16051D)- Supervisory Control and Data Acquisition Systems work
   2. Section 16052- Basic Materials and Methods for Traction Power
   3. Section 28 40 01 (16053D-)- Operation and Maintenance Training for Supervisory Control and Data Acquisition Systems
   4. Section 28 40 08 (16149) - Wire, Cable and Termination Panel for SCADA System
   5. Section 28 40 07 (16291A) - Human Machine Interface for AC Room and Traction Power SCADA systems
   6. Section 28 40 03 (16603) - DC Digital Trace Recorder
   7. Section 28 40 04 (16604) – Network Switch for SCADA and Automation Systems
   8. Section 28 40 05 (16605) – Distributed input output (DIO) module for traction power systems.
   9. Section 28 40 06 (16606) - SCADA Systems Site Acceptance Test Plan.

K. Design Standards
   1. The RTUs shall be designed in accordance with applicable International Electro-Technical Commission (IEC), Institute of Electrical and Electronics Engineer (IEEE), American National Standards Institute (ANSI), and National Equipment Manufacturers association (NEMA) standards, unless otherwise specified in this Technical specification. In all cases the provisions of the latest edition or revision of the applicable standards in effect shall apply.
   2. The RTU shall be designed around microprocessor technology. For easy maintenance the architecture shall support pluggable modules on backplane. The field wiring shall be terminated such that these are easily detachable from the I/O module

L. Operating Requirements
   1. Designed for continuous, unattended operation to perform:
      a. Analog, digital and pulse data acquisition.
      b. Digital control.

M. Power Requirements
   1. 120 Volts AC power for RTU light and receptacle.
   2. 125 Volts DC for Data Concentrator, Modules and Computer

1.02 REFERENCES

A. Code, Regulations, Reference Standards and Specifications

1. Code and Regulation of jurisdictional authorities
2. NEC
3. NEMA 250, ICS-6, WC8, 12
4. ANSI C37.90, Z55.1, C12
5. EIA: RS 232.C
6. ASTM: B138
7. ASHRAE/ANSI : 135P
8. ICEA: S-68-516

1.03 QUALITY ASSURANCE

A. RTU shall be of proven design and suited for SCADA applications in electrical and Traction power and Electric power systems.

B. The RTU point mapping shall comply in every respect with the RTU Point Assignment Charts (PAC) in section 28 40 00 (16051D) and of any supplements thereto that become effective before this Contract is awarded.

C. The Contractor shall certify that the entire microprocessor system type being furnished under this contract has been tested to successfully operate in high electric background noise environment. The system shall comply with the requirements of with IEEE C37.90.1.

D. All components of the system shall be capable of continuous operation at temperatures of –40 degrees F to 160 degrees F and humidity levels of 5% to 95%, noncondensing, without the need of any external environment controls.

E. No failure of any component of the RTU shall cause the system to falsely or erroneously maintain for any reason a trip state of an equipment.

F. The RTU shall be designed and configured to communicate with Master Stations using DNP3 protocol.

G. The RTUs shall be designed in accordance with applicable Institute of Electrical and Electronics Engineer (IEEE), American National Standards Institute (ANSI), and National Equipment Manufacturers association (NEMA), International Electro-technical Commission (IEC) standards, unless otherwise specified in this Technical specification. In all cases the provisions of the latest edition or revision of the applicable standards in effect shall apply.

H. RTU shall have defects warranty period, which shall be for a period of 10 years from the date of commissioning. During the warranty period, defective parts shall be returned to the Supplier for replacement on an exchange basis.

1.04 SUBMITTALS:

A. General: Refer to Division 1 for Shop Drawings, Product Data, and Samples submittal requirements and procedures.

B. Provide at the time of bid, a certificate from an independent testing company that the RTU software IEC61850 stack has been tested and has not shown to be non-conforming to IEC 61850 communication networks and systems in substation.

C. Submit the following drawings, data, and procedures for approval prior to furnishing and installing the equipment:

1. Complete system data flow and software architecture diagrams for all modules of the system and all interfaces to the system.
2. Complete circuit drawings and systems diagrams, in a manner as hereinafter specified, for all system and subsystem interfaces, including interconnections of all hardware to the system.
3. Complete power distribution circuit drawings and schematics, as hereinafter specified.
4. Complete rack layout and arrangement plans.
5. Complete equipment plans and installation drawings showing all components of the system. These drawings shall include complete keyed parts lists for all components of the system, racks, terminal boards, plug connectors, cable boots, mounting hardware, and all other rack mounted equipment and hardware.
6. Drawings showing details of interconnecting cables, plug couplers, terminal boards, and other interconnecting devices complete with keyed parts lists and cable assembly instructions.
7. Complete predicted Reliability and Maintainability calculations. Actual performance data for a like system for which reliability records have been maintained for a period of not less than three (3) years, may be used to support or substantiate the submitted predicted calculations.
8. Complete power calculations for all power sources energizing the controllers. Where manufacturer's specific ripple or regulation specifications exist for the controllers or associated equipment relying upon these power sources, compliance with such ripple or regulation specifications shall be demonstrated to the satisfaction of the Engineer.
9. Factory Test Procedures designed to demonstrate that the manufactured system will be tested to verify that it performs all functions in accordance with these specifications, section 28 40 06 (16606) and in accordance with the approved plans.
10. Subsequent to Factory Testing, certified factory test reports.
11. Complete and comprehensive Installation and Inspection Procedures.
12. Field Test Procedures in accordance with the testing section of these Specifications to

verify that the installed system meets all safety and operational requirements of these Specifications, section 28 40 06 (16606) and that it has been installed in accordance with the final approved plans.

13. Field Test Reports complete with data results.
14. End to End Test Procedures in accordance with the testing section of these Specifications to verify that the installed system meets all safety and operational requirements of these Specifications, section 28 40 06 (16606) and that it has been installed in accordance with the final approved plans.
15. The Contractor shall provide on electronic media six weeks prior to the start of any factory acceptance testing a complete sets of application, service, and development system manuals, including manuals covering all software and hardware provided as part of the application software development system required as part of this Contract.
16. Submit as-built drawings of all the works done under this specification for approval.
17. Operation and maintenance (O & M) manuals (Refer to 28 40 00 (16051D))
18. Preventive Maintenance Instructions (Refer to 28 40 00 (16051D))
19. Spare Parts:
    a. Recommended spare parts shall be detailed and listed for each RTU.
    b. Unit prices shall be supplied.
    c. The list shall include the following:
    d. Item identification
    e. Recommended spares quantities
    f. Base price
    g. Spare Part Quantity: 20%
20. Certification:
    a. Certified test results for the specified tests on the Remote Terminal Unit or provide certified test reports on identical unit.
    b. Certificates from manufacturers verifying that equipment conforms to the specified requirements.
    c. Certificate for IEC 61850 compliance.

1.05 CLOSEOUT SUBMITTALS:

A. Software and Firmware Operational Documentation:
    1. For each programmable intelligent electronic device, the contractor shall provide the following:
        a. Configuration software

b. Configuration file
c. Licensing agreements which state that the software packages are licensed to WMATA.

2. Program Software Backup: On electronic media or compact complete with data files.
3. All configuration files shall be in their native format and will become the property of WMATA.
4. This shall not include any copyright or license terms that require permissions from the vendor for modifications to the files.
5. Device address list.
6. Printout of software application and graphic screens.

B. As-Built Documents: Prior to Substantial Completion develop as-built documents as follows:
1. Submit three (3) sets of approved as built drawings in both printed hard copies and digital copies on approved medium.
2. 11-inch by 17-inch printed copies of the interconnection wiring diagrams applicable to the specific location and or equipment shall additionally be provided in sufficient copies, laminated if required, to be stored in each RTU interface cabinet door pocket.
3. Approved copies of each submittal.
4. Provide As-built drawing in both AutoCAD and PDF formats on CD in sleeves.

1.06 TRAINING:

A. Refer to Section 28 40 01 (16053D) –SCADA systems Training.

1.07 DELIVERY, STORAGE, AND HANDLING

A. The Supplier shall deliver RTUs to the address as indicated in the schedules. Full street address shall be confirmed at time of shipping.
B. RTUs shall be suitably packed to prevent damage during loading, unloading and transport. Equipment sub-assembly which could get damaged due to vibration shall be removed from assembly & packed separately for transport.
C. Each RTU and associated equipment shall be labelled as specified in the contract.

PART 2 – PRODUCTS
2.01 GENERAL:

A. The following RTU manufacturers are pre-qualified to manufacture and supply RTUs to WMATA on the condition the proposed equipment meet all the requirements in this specification.
   1. Schweitzer Engineering Laboratories (SEL)
   2. Novatech

B. RTU FUNCTIONS

All functional capability described herein shall be provided by the Contractor even if a function is not initially implemented. As a minimum, the RTUs shall be capable of performing the following functions:

1. Collecting and processing the digital status inputs, analog inputs, accumulated values and transmitting to at least four master stations.
2. Receiving and processing digital & analog control commands from at least four master stations.
3. Accepting polling messages from at least four master stations simultaneously using separate logical databases for each master station.
4. Communication simultaneously on all Communication ports and using multiple concurrent protocols, including the DNP3, IEC 61850 and MODBUS protocols.
5. Data transmission rates from 150 to 56,600 baud for serial ports for both DNP3 and MODBUS, 10/100base T (X) and 100baseFX for TCP/IP Ethernet ports.
6. RTU shall be compatible with DNP3, 61850 and Modbus protocols for communication with IEDs.
7. RTU shall be capable of simultaneously communicating with at least 50 DNP3 and 50 IEC 61850 devices. Contractor will need to demonstrate that RTU can actually communicate with the devices without degradation of performance.
8. RTU shall be capable of simultaneously communicating with at least 10 Modbus device types.
9. RTU shall have the capability of automatic start-up and initialization following restoration of power after an outage without need of manual intervention. All restarts shall be reported to the connected master stations.
10. RTU shall support time synchronization through messages received from master station using DNP3 protocol.
11. RTU shall support downloading of RTU database from the master station using the DNP3 protocol.
12. RTU shall support SOE (Sequence of events) feature
13. Acting as a data concentrator for acquiring data from IEDs and exercising supervisory control on end devices using DNP3, IEC 61850 and Modbus protocol.

14. RTU shall include at least 10 RS-485 and 4 RS232 connection ports available and integrated to the RTU.
15. Mandatory to guard the data/ equipment from intrusion/damage/breach of security & shall have SSL/VPN based security,
16. Shall have SNMP

C. COMPUTER FUNCTIONS

1. An industrial computer described in this specification shall be provided and installed in the RTU cabinet by the Contractor. The computer shall be used to run multiple applications including Digital Trace Recorder (DTR), the Human Machine Interface (HMI) and other applications.
2. The RTU manufacturer's SCOPE OF WORK shall only include provision and installation of the computer.
3. The system integrator or the manufacturer of the DTR and the HMI systems are responsible for the installation and integration of their systems software.

D. RTU SIZE AND EXPANDABILITY

1. RTU shall be equipped for the hardwire point counts defined in Table 1 (Basic+20% spare (wired & hardware). It shall be possible to expand the RTU capability for additional 100 % of the basic point counts by way of addition of hardware such as modules, racks, panels; however, RTU software and database shall be sized to accommodate such growth without requiring software or database regeneration.
2. It should be noted that any expansion in point count, quantity of IEDs shall require no further licensing.

   TABLE 1: RTU CONNECTION POINT REQUIREMENTS

RTU TYPE	**Control Points**		**Status Points**	**Analog Points**		**Accum Points**
	Momentary	**Latching**		**0-1mA**	**4-20mA**	
ALL RTUs	8	8	24	16	16	8

3.

E. Auxiliary contacts, modules and data interfaces added to equipment specified in other sections are to be provided by the particular equipment manufacturer or coordinated with the particular equipment manufacturer so as not to void any warranties.

2.02 REMOTE TERMINAL UNIT

A. RTU System Design

1. The RTU shall be designed to work in a HV traction power substation and Electrical Stations by being of robust physical construction with immunity to electrical noise.
2. The RTU shall be assembled from modular units and shall be able to be arranged on the RTU rack in any order.
3. Modules shall be interconnected via a suitably robust plug and socket method. It shall not be necessary to unscrew individual wires/cables, internal RTU wiring and I/O wiring, to replace faulty modules. The failure of one module shall not affect the performance of any other module.
4. The RTU and the cubicles shall be designed to accommodate the actual number of input/outputs and IEDs at the specific substation, plus spare capacity.
5. Minimum RTU I/O quantities shall be developed in accordance with requirements specified in Table 1.
6. RTU shall be designed to interface directly and indirectly with electrical equipment and protection systems and other devices within the electrical and traction supply power distribution networks.
    a. Direct interface is via wiring directly from digital and analogue sensors located within the substation equipment to the RTU, and from relay outputs within the RTU to equipment panels in the substation.
    b. Indirect interface is via local network switches between the RTU and the IEDs in the substation.
7. RTU Architecture:
    1. TPSS and TBS RTU Architecture:
        a. Distributed RTU design is used where distributed I/O modules are housed in respective switchgear cubicles. All these distributed I/O modules are connected to a central processor in the RTU for further communication with master stations.
    2. Combined AC Rooms
        a. One centralized RTU is used where the data concentrator and all I/O modules are housed in the RTU cabinet and communicating with master stations through communication ports.
    3. In Separated AC Rooms:
        a. AC Room #1: One centralized RTU is used where the data

concentrator and all I/O modules are housed in the RTU cabinet and communicating with master station through communication port. This RTU also polls all information from the satellite RTU located in the AC room #2.

b. In AC Room #2: One satellite RTU is used where I/O modules are housed in a RTU panels and this RTU communicates with the main RTU located in AC room #1.

8. RTU shall be configured using WMATA point assignment chart templates to ensure compatibility with master stations.
9. RTU to master station communication protocols shall be DNP3 Level 2 which incorporates functionality and security.
10. The substation computer shall be provided and installed by the RTU manufacturer.
11. The computer shall be installed in the RTU cabinet on the equipment rack.
12. The contractors shall provide all software and hardware required for the configuration of the RTU's and the computer

B. RTU power supply

Each RTU supplied shall be provided with the following:

1. Power source 1 – 125VDC substation battery
   a. RTU shall derive its power requirements from the substation battery.
   b. Two pole thermal circuit breaker shall be provided in the facility 125VDC control power panel to isolate the station battery supply from the RTU system.
   c. The RTU power supply shall be designed to operate at full-specified performance for DC supplies.
   d. The RTU shall have adequate protection against reversed polarity, over current and under voltage conditions, to prevent the RTU internal logic from being damaged and becoming unstable or causing mal-operation.
2. Power source 2– 120V AC general purpose
   a. A general purpose 120VAC supply is used for the RTU cabinet interior illumination, GFI receptacle and other auxiliary.

C. Remote Terminal Unit Controller

1. The RTU shall be microprocessor based automation platform capable of providing highly secure select-before-operate controls, status monitoring with 1 millisecond Sequence of Events (SOE) time tagging, and user programmable automation functions. Once power is supplied to the unit, it shall be designed to operate without manual intervention; additionally, it shall auto restart and be able to communicate with the master station

without reporting spurious state changes on power resumption after a power failure. Suitable, reliable indicators such as LEDs shall be provided for personnel to readily ascertain the status of the RTU.

2. The processor shall monitor the health of the RTU and shall have built in diagnostics. The RTU shall allow remote interrogation including but not limited to diagnostics for memory and bus errors, buffer overflows, local software routine health, communication ports status, input/output card health. Diagnostics shall also be supplied that shall permit complete testing of the RTU with a portable computer. Diagnostic checking of the communication ports shall be provided to permit checking by a portable computer.
3. Power supply and battery low volts or failure conditions shall be monitored.
4. The RTU shall possess memory to permit storage of a minimum of 2000 events (input changes) locally for subsequent transmission to the SCADA master station and these events shall not be lost on buffer overflow; an indication shall be provided of this latter condition. Events will be retained in the buffer until they are correctly read by the master station. As a minimum, separate buffers shall be provided for digital and analogue events.
5. A Separate event recording for the internal RTU events shall be provided and buffered. The internal events shall include but not limited to the events such as health, time synchronization and any internal errors. This shall permit storage of up to 2000 events.
6. When memory is provided for the purposes of local control or communications routines, spare memory capacity equal to the amount utilized shall be provided.
7. The RTU shall have a real time clock, with a resolution of 1msec or better. It shall have the capability of time stamping events. The RTU clock is normally synchronized by the master station using DNP3 protocol every 5 minutes. In the advent that this does not occur, the RTU internal clock shall drift no more than 1 second in 24 hours.
8. The RTU shall be capable of reporting, events in 1msec steps with accuracy of +/-1% of the stamped time.
9. The RTU shall be equipped with a “controls isolate” switch, which shall inhibit all control outputs from being executed. When this control inhibit switch is activated, the RTU shall maintain the last control output applied immediately before the switch activation for the duration the switch activation or until a local manual intervention is initiated. The status of this switch shall be monitored by the RTU.
10. The RTU shall be capable of programming in a high level language to implement local control and logic routines.
11. The RTU shall incorporate a unique digital address or identifier. The addressing scheme

shall allow operation of several RTUs on a common communications line as well as random access to individual RTU.

12. The RTU shall be an easily configurable unit capable of selectively concentrating data from multiple Intelligent Electronic Devices (IEDs) and local and distributed discreet I/O panels (status, accumulators, analog, controls) into communication channels with one or more SCADA Master Stations.
13. The RTU configuration software provided shall run on a standard Windows PC and shall provide drag & drop menus to configure the RTU's communication ports; status, alarm and control points; IED communication Clients; Master Station communication Servers; selective routing of data points between the IED Client databases and Master Station Server databases, and local calculations and stand-alone control algorithms. Gateway configuration shall require secure login with a user's ID and pass-word.
14. The RTU shall be scanned by the Operation Control Center (OCC) Advance Information Management System (AIM) master stations and the SCADA master stations. The protocol used is DNP3 over TCP/IP.
15. The message exchange between the Master Station computer and the RTU shall be controlled and supervised by the master station computer. Commands to which the RTU shall respond may include, but not necessarily be limited to, the following:
    a. Full scan request - Initiates transmission of all measurement and status.
    b. Selective scan request - Initiates transmission of selected measurement and/or status points.
    c. Report by exception - Initiates transmission of only those points which have changed since the last transmission. A range of values or dead band, which may be set by the operator, shall determine whether an analog variable shall be transmitted. If the variable has changed by less than the specified dead band since the last reported value, the value shall not be transmitted. If the variable has changed more than the specified amount since the last reported value, the value shall be retransmitted
    d. Control point select and verify - Command to select a digital control point select.
16. Transmit information only after receiving the proper address from the master station. Design RTU so that it will not respond to the reply messages of other RTUs. Replies of the RTU shall include, but not necessarily limited to, the following:
    a. Analog and pulse data value message.
    b. Digital data value message.
    c. Check back response - Acknowledgment of control point select.

d. End message - End of block of data.

D. Communication Interfaces

The RTUs shall support simultaneous communications with multiple independent master stations (SCADA system), maintenance and configuration terminal (Laptop PC), Multi-function transducers and Local computer/Logger. The RTUs shall have communication ports as follows:

1. The RTU shall be capable of simultaneous communication over the following interfaces with both VPN and SSL security:
   a. Ethernet 10/100baseT(X) or 100baseFX (TCP/IP and OSI)
   b. RS232 ports: bit or byte oriented, synch or asynch, 150 - 57,600 bps
   c. RS485 ports: bit or byte oriented, synch or asynch, 150 - 57,600 bps
2. The RTU shall be capable to simultaneously communicate with:
   a. At least four independent Master Station Servers using DNP3 protocol, and communicating over of any combination of serial or Ethernet ports, or using two different IP addresses.
   b. In addition, at least two independent Masters using Modbus protocol (HMI computer), and communicating over of Ethernet ports and using two different IP addresses.
   c. The RTU shall also be capable to communicate simultaneously with 7 or more Modbus IEDs types.
   d. The RTU shall also be capable to communicate simultaneously with up to fifty IEDs using DNP3.
   e. The RTU shall also be capable to communicate simultaneously with up to fifty IEDs using IEC 61850 protocol.
3. The RTU shall respond to independent scans and commands from Master Stations, local computer and Configuration &Maintenance Terminal simultaneously. The RTU shall support the use of a different communication data exchange rate (bits per second) and scanning cycle on each port.

E. Communication Protocol between RTU and IEDs

1. The RTU shall use the DNP3, IEC 61850 and Modbus protocols for communication with IEDs over Substation LAN. The RTU shall act as a Client and collect data from the IEDs).
2. The RTU shall store the data acquired from the IEDs in its database and do processing like change detection/dead band processing on the data for optimizing its transmission to the Master Station (SCADA Control Centre). The processing shall include requirements of mapping of information from the protocol of IEDs to the protocol requirement for communication with Master Stations.

F. Communication Protocol between RTU and Master Stations

1. DNP3 protocol shall be used as the standard protocol for communication between the RTU and Master Stations.
2. The RTU shall perform as a slave to SCADA master stations. All communication shall be initiated by the SCADA master stations. RTU must notify the master stations of unusual conditions at the RTU (such as a power fail/restoration, RTU malfunction and communication failure with an end IED), the transfer of changed data etc. All the notifications shall be accomplished within the framework of the periodic data acquisition exchanges.
3. The RTU shall process the various messages/commands for communication to the Master station using the following priority.
    a. Control command
    b. Status data by exception
    c. Analog data by exception
    d. Analog data periodic
    e. Status data integrity scan
4. The communication interface to the master station(s) shall allow scanning and control of defined points within the RTU independently for each master station using a separate logical database in the RTU. It shall be possible to pick points from the RTU database randomly and assign it for reporting to a Master station. Further, the RTU shall support the use of a different communication data exchange rate (bits per second), scanning cycle, and/or communication protocol to each master station.
5. SCAN GROUP
    a. Analog and digital input points (including points reported by exception) shall be assignable to scan groups. A scan group shall be a specified set of data points within the RTU central database which will be communicated to a master station when requested by a specific (addressed) scan request. A scan group size shall only be limited by the communication protocol message length. Any RTU input point shall be assignable to any scan group. The RTUs shall support at least sixteen scan groups and all scan groups per communication port (i.e. master station/ LDMS interface). The Contractor shall provide a convenient and flexible scheme for assigning points in the RTU to scan groups.
    b. The following scan groups are defined in the WMATA point assignment charts:
        1) OCC Scan group
        2) HMI scan group

3) AEMS scan group

6. Reporting of Status Points:
   a. The RTU communication protocol shall be configured to report digital status changes by exception to master station. Digital status data shall have higher priority than the Analog data. All the digital status data shall also be assigned to scan groups for integrity check by Master stations at every 1 second.
7. Reporting of Analog Points:
   a. The analog data shall be reported periodically to update all the values at the master station within 10 to 15 seconds. Analog data shall also be reported by exception if the analog value exceeds its previous value by a configurable percentage.
8. Digital Control Commands:
   a. The RTU shall follow the select-and-execute sequence for operation of digital control commands from the master station. The RTU shall reset its control logic upon any error in the sequence.

G. Data Concentrator Communication Protocol

1. The RTU shall act as a DNP3, Modbus and IEC 61850 protocol master and collect data and also perform supervisory control from/on the slave RTUs and communicate it to the Control Center. The Master protocol implementation shall be such that the data polling requirements is at accomplished.
2. RTU as a Data concentrator shall have capability to report to four master stations.
3. Data concentrator shall support at least 1,500 (fifteen hundred) data points.
4. The RTU as a Data Concentrator shall use Network Time Protocol (NTP) for time stamping of Data concentrator which in turn shall synchronize the DNP 3, IEC and Modbus protocol connected RTU/device.
5. The RTU as a Data Concentrator shall come complete with built in monitoring mechanism such as “Sequence of Events, SOE” that receive all data changes without losing a single event.
6. The data concentrator shall have dual CPU or High Performance CPU and dual Power supply units. The overall data update requirement from any device to Control Centre should not affect the functionality defined elsewhere in the specification.
7. The Data concentrator shall have the provision for remote login from SCADA servers.
8. The SCADA master station and the local computer system shall be able to configure and poll health of Data concentrator after due authentication of the users.
9. It shall include embedded Web Server for maintenance and remote diagnostics.

Individual RTU configuration shall be possible from Data Concentrator including accommodating devices from different suppliers. The RTU as a Data Concentrator shall have following communication ports & support for protocols:

a. DNP3 for Master Stations
b. DNP3 for devices
c. IEC 61850 for devices
d. Modbus for devices
   a.
e. TCP/IP
f. Ethernet 100baseT to local Laptop

10. The other requirements given for RTU elsewhere in the specification shall be applicable to RTU as a Data concentrator also.

H. Switchgear Digital Input/ Output Modules (DIO):

1. Digital Output modules are installed in the AC and DC switchgears by the switchgear manufacturer for the control and status indication of circuit breakers.
2. The RTU shall provide the capability for a master station to select and change the state of digital output points of the DIO and receive status indications via the digital input points of the DIO.
3. The RTU shall use the DNP3 protocol for communication with switchgear DIOs over Substation LAN.
4. Refer to section 28 40 04 (16604) for remote digital input-output module requirements.
5. Switchgear DIO-Digital Outputs:
   a. A pair of outputs is supplied on the DIO for each two-state (open/close) control output point that drive control relays.
   b. One output is supplied for open, the other for close.
   c. Upon command from a master station using the check-before-execute sequence, the appropriate control output on the remote DIO operates for a preset (momentary) time period to control the circuit breaker through external interposing relays. The operation period shall be adjustable for each point from 0.1 to 2 seconds.
   d. Control Output Interposing Relays:
      1) The operation the momentary relays on the remote DIO will activate external control output interposing relays supplied by the switchgear manufacturer for each control output as specified in section 16341.
      2) The control output interposing relay 201T open the circuit breaker.

3) The control output interposing relay 201C close the circuit breaker.
4) The RTU manufacturer is not responsible for the control output interposing relays.

6. Switchgear DIO-Digital Inputs:
   a. Monitor circuit breaker's status and alarm points via remote digital input modules.
   b. Refer to section 28 40 04 (16604) for Remote Digital Input-Output modules connections.

I. RTU Instrumentation and Control Interfaces Input/output Modules (Inside **RTU Cabinet**):

1. Digital Input Modules (Status Inputs):
   a. Monitor status and alarm points via digital input modules. Digital input modules shall accept dry contact inputs.
   b. RTU shall be capable of accepting isolated dry (potential free) contact status inputs. The RTU shall provide necessary sensing voltage, current, optical isolation and de-bounce filtering independently for each status input. The sensing voltage shall not exceed 24Vdc.
   c. The sensing voltage source shall be isolated from that of the RTUs logic power so that any noise or a short circuit across the sensing supply of a digital status input terminals would not disrupt the RTU operation other than the shorted digital status input.
   d. The RTU shall be set to capture contact operations of 20 ms or more duration. Operations of less than 20 ms duration shall be considered no change (contact bounce condition). The RTU shall accept two types of status inputs i.e. Single point Status inputs and Double point status inputs.
   e. To take care of status contact chattering, a time period for each point and the allowable number of operations per time period shall be defined. If the allowable number of operations exceed within this time period, the status change shall not be accepted as valid
   f. Single point status input will be from a normally-open (NO) or normally-closed (NC) contact which is represented by 1-bit in the protocol message.
   g. The Double point status input will be from two complementary contacts (one NO and one NC) which is represented by 2-bits in the protocol message. A switching device status is valid only when one contact is closed and the other contact is open. Invalid states shall be reported when both contacts are open or both contacts are closed.
   h. All status inputs shall be scanned by the RTU from the field at 1 millisecond

periodicity.

2. Digital Control Output Modules:
    a. Control Security and Safety Requirements:
        1. The RTU shall include the following security and safety features as a minimum for control outputs:
            a) Select- check-before-operate (SCBO) sequence for control output.
            b) No more than one control point shall be selected and executed at any given time.
            c) The control selection shall be automatically cancelled if after receiving the "control selection" message, the "control execute" command is not received within the set time period.
            d) No control command shall be generated during power up or power down of RTU.
    b. The RTU shall provide the capability for a master station to select and change the state of digital output points. These control outputs shall be used to control power system devices such as Circuit breakers relay disable/enable and other two-state devices, which shall be supported by the RTU.
    c. A set of control outputs shall be provided for each controllable device. On receipt of command from a master station using the select check-before-execute operate (SCBO) sequence; the appropriate control output shall be operated for a preset time period which is adjustable for each point from 0.1 to 2 seconds. Outputs shall be latching continuous output contact closure. Receipt of a point selection address shall cause the RTU to return a verification message to the master station. Execute commands only after the dispatcher has verified that the selected point is the desired point and has issued an execute command for the function to be performed.
    d. Control relays shall be installed between the output modules and terminal strips. Each control output shall consist of one set of potential free NO contact. The output contacts shall be rated for at least 10Amperes at 120 Volts ac resistive load. These output contact shall be used to drive heavy duty relays. In case Control output module of RTU does not provide potential free control output contact of this rating, then separate control output relays shall be provided by the contractor. These relay coils shall be shunted with diodes to suppress inductive transients associated with energizing and de-energizing of the relay coils & shall

conform to the relevant requirements.

3. Analog Inputs:
    a. The RTU shall accommodate analog inputs which are unipolar or bipolar, 2-wire ungrounded differential signals. All analog inputs are of +4 to +20 mA. However, the RTU shall be capable of accepting other standard analog input ranges (0 to 5V, 0-10V, 0 to 10mA).
    b. The RTU shall make all appropriate signal level conversion and conditioning to allow full utilization of analog inputs and meaningful reasonability checking. The analog-to- digital converter shall have at least twelve (12) bits plus sign. Each type of analog input shall be converted with full resolution. The RTU shall monitor the drift in characteristics of its ADC and mark the analog points with a drift quality code if a drift is detected. This drift quality code shall be sent to the master station also.
    c. The overall accuracy of the analog input system shall be at least 0.2 %(i.e. 99.8%) at 25 ºC of full scale. Mean accuracy shall not drift more than 0.002% per degree C within the temperature range of –5 to +55 degree Linearity shall be better than 0.05%. Each input shall have suitable protection and filtering to provide protection against voltage spikes and residual current. Loading up to 150% of the input value shall not sustain any failures to the RTU input.
    d. The total burden imposed by the RTU/DC analog input circuit shall not exceed 0.5 volt-ampere for current and voltage inputs.
    e. All analog inputs shall be scanned by the RTU from the field at least at 1 second periodicity.
4. Pulse Input Modules:
    a. Pulse input modules shall receive pulses in the form of contact open/closure from 3-wire (Form C) pulse initiators. The accumulated count shall not be altered, nor shall counting be interrupted when a count is transferred to the master station. Each counter shall have enough capacity to accumulate the number of pulses expected at the metering point in a 4-hour period without overflow, assuming an average pulse rate of 1 pulse per second. Pulse counter inputs shall be capable of accepting pulse inputs at a rate of 5 pulses per second. The pulse forming voltage, if required, shall be furnished from the RTU circuit.
    b. The pulse count registers shall not be reset at the end of the interval and shall continue to accumulate and automatically roll over only when they reach maximum count.

J. Sequence of Events (SOE) feature

1. SOE is the time-stamped digital status data. SOEs will enable Employer's personnel to determine the sequential operation of digital status input devices for their state changes. The RTU shall time-stamp the digital status data with a time resolution of one millisecond.
2. Initially, all breakers & protection contacts digital status input points in the RTU shall be configured as SOE points. However it shall be possible to assign any digital status input data point in the RTU as SOE point. Each time a SOE status input point changes state, the RTU shall time-tag the change and send it to the Master station. The RTU shall maintain a SOE buffer within the RTU for communication delays and communication failure. SOE buffer shall be sized to store, as a minimum, of 600 events. The RTU shall transmit the SOE data stored in its buffer to master stations. An acknowledgement of receipt by the master station shall be made prior to the loss of any data in the RTU SOE buffer. Data not received at the master station shall be retransmitted. The RTU shall send a message to the master station to indicate the RTU SOE data buffer overflow condition.
3. Local/Remote selector switch
    a. A manual Local/Remote selector switch shall be provided for each RTU to disable all control outputs by breaking the power supply connection to the control output. When in the "Local" position, the Local/Remote switch shall allow testing of all the control outputs of RTU without activating the control outputs to field devices. A status input indication shall be provided for the Local/Remote switch to allow the SCADA system to monitor the position of the switch.
4. Dummy breaker latching relay
    a. The Contractor shall provide a latching relay to be used to simulate and test supervisory control from the Master station. The latching relay shall accept the control signals from the RTU to open and close, and shall provide the correct indication response through a single point status input.
5. RS485 Communications Ports:
    a. A minimum of 10 RS-485 and 4 RS232 connection ports shall be available and integrated to the RTU to interface to local computing device. Currently, these IEDs communicate using the Modbus and DNP3 protocols.
    b. A separate serial to Ethernet port server to increase the number of serial ports is not acceptable.
6. RTU Diagnostic and configuration utilities
    a. The contractor shall provide a laptop PC loaded with the diagnostic software, configuration and maintenance tools and the simulator & protocol analyzer

software tool mentioned below. The laptop PC shall be provided with all hardware accessories including cables, connectors etc. required for interfacing with Master station, RTU and end devices. A suitable Hub shall be provided to use the tool in monitor mode. A carrying case and a suitable power adaptor for laptop PC shall also be supplied.

b. Diagnostic Software:
    1) Diagnostic Software shall be provided to continuously monitor the operation of the RTU and report RTU hardware errors to the connected master stations. The software shall check for memory, processor, and input/output ports errors and failures of other functional areas defined in the specification of the RTU.

c. RTU Configuration and Maintenance Tool
    1) The RTU database configuration & Maintenance software tool shall be required to perform the database modification, configuration, compilation and documentation. The database compiler shall provide error detection services. It shall also perform the downloading of the compiled database into the RTU database.
    2) Monitoring of all inputs, control of all outputs and testing of calculation logic. Monitoring of all inputs and logic at card level, logic level and DNP3 level.
    3) Display of communications statistics and level of eavesdropping of communications channels, including Ethernet, IP, DNP3, Modbus and IEC61850.
    4) Download & upload of RTU software, database configuration and calculations, download the complete configuration from RTU to modify and then upload to RTU.
    5) On-line help.
    6) Display the installed version number of firmware, software and configuration running in the RTU
    7) Configuration and diagnostic software must run on Windows 7
    8) The diagnostic and configuration utility software shall be provided on a CD/DVD with Licenses. The current version number of such software shall be provided. Any costs in upgrading to subsequent version numbers shall be included in the pricing.

d. Master station-to-RTU simulator & protocol analyzer software tool:

1) Master station to RTU simulator tools ASE2000-COM (SafeNet Sentinel Pro ™ USB security plug) and ASE 61850 shall be provided and used to test the communication interfaces of Master station, RTU and end devices. The RTU simulator shall be capable of emulating the servers DNP3, IEC61850 and Modbus protocols. It shall also be possible to prepare illegal messages for transmission, such as messages having invalid checksum.
2) The protocol analyzer shall be used to monitor all communication traffic on a channel (between Master station & RTU and between RTU & end devices without interfering channels operation. Channel traffic captured in the active or passive modes of operation shall be displayed.
3) The Master station simulator and protocol analyzer tool shall also have the following features:
    a) Each received message shall be checked for validity, including the check sum.
    b) The tool shall maintain and display error counters so that the number of errors during a period of unattended testing can be determined.
    c) All fields of a message shall be displayed. A pass/fail indication for the message shall be included.

7. Terminal Strips:
    a. Terminal blocks shall be provided for disconnection (isolation), with full-depth insulating barriers made from molded self-extinguishing material.
    b. Terminal blocks shall be appropriately sized and rated for the electrical capacity of the circuit and wire used.
    c. No more than two wires shall be connected to any terminal. Each analog input signal, digital status input and digital output signals shall require two terminals per point plus a common shield termination for each cable.
    d. All terminal blocks shall be suitably arranged for easy identification of its usages. Refer to contract drawing for connection arrangements
    e. Direct connections of field wires to RTU input output modules shall not be allowed.
8. Spare:
    a. Provide a minimum of 20% spare points and 2 spare serial ports.

2.03 SUBSTATION INDUSTRIAL COMPUTER

A. Contractor shall supply and install SEL 3355 industrial computer in each RTU cabinet for functions described in paragraph 2.01.C of this specification.

B. The computer shall operate with network access to provide a combination of functions including, but not limited to, visualization and control of equipment, data acquisition, simultaneous collection of data from serial and Ethernet server devices, and simultaneous data access for multiple client devices.

C. The device shall conform to various industry standards, operate in harsh environments, and provide the operational and functional requirements as described below.

D. The computer shall use high performance x86-64 Architecture based on latest Intel core microprocessor architecture to deliver very high performance and broad operating system and software compatibility.

E. Multiple processor cores and Intel Hyper- Threading Technology to enable to run multiple time-critical applications simultaneously.

F. Operating System: The computer shall be provided with Microsoft Windows 7 Professional, 64-bit.

G. Power Supply. The device shall be available with 125VDC power supplies.

H. Temperature. The computer shall be capable of continuous operation over a temperature range of –40° to +75°C.

I. Communications Ports. The computer shall come standard with two front-panel USB ports, four rear-panel USB ports, two rear-panel serial ports, and two rear-panel Ethernet ports. Each standard serial port shall be EIA-232/EIA-422/EIA-485 RJ45 serial ports. Four additional Ethernet ports, SFP 100Base FX. All communications ports shall be ESD and RFI protected.

J. Hot-Swappable Industrial Solid-State Drives. The device shall have high quality, industrial-temperature rated, single-level cell (SLC) NAND Flash solid-state drives available. All drives shall support hot-swapping.

K. Solid State Drive sizes: Two 400GB Industrial Grade SLC SSD

L. RAM: 16GB

M. Display Interfaces. DVI, DisplayPort, VGA, or HDMI video connections enable to connect one or two simultaneous, independent, high-definition displays.

N. Expansion Slots. A legacy PCI, two PCI Express (PCIe) x4, and two PCIe x1 slots shall provide room for legacy and the latest PCIe expansion cards.

1. The computer shall be provided with the following ports:
    a. Two (2) RJ-45 10/100/1000
    b. Two (2) SFP 100Base-FX

O. Nonvolatile Storage. There shall be Flash memory used as nonvolatile storage of settings, configuration, and incoming and calculated data. Data stored in the nonvolatile memory shall be available for retrieval after sustained power outage, including failure of the internal battery.

P. Moving Parts and Vent Holes. The computer shall not include any rotating disk drives, fans, moving parts, or vent holes.

Q. Alarm Output. There shall be an alarm contact output to signal internal errors and malfunctions. The alarm contact shall be supervised by an internal watchdog system that independently monitors the operating system. The alarm contact shall be connected and monitored by the RTU.

R. Conformal Coating. The computer shall have conformal coating to protect the circuit boards from harsh environments.

S. Mounting. 3U Horizontal 19-inch rack

T. Reliability. The vendor shall supply the actual measured Mean Time between Failures (MTBF) for the computer.

U. Warranty. The computer shall include a TEN-YEAR, no-questions-asked warranty for all material and workmanship defects. In addition, the warranty shall cover accidental customer-induced damage.

2.04 PERFORMANCE REQUIREMENTS

A. Environmental conditions

The RTU shall be designed and supplied suitable for indoor equipment conditions as specified by ANSI/IEEE C37.1 for new RTU not currently installed in WMATA facilities, heat dissipation calculations shall be provided to demonstrate the RTU's ability to comply with the temperature ratings of the equipment in the range specified. These calculations shall be done on the assumption that maximum spare capacity as specified in section 2.02 is implemented.

B. Maintainability

RTUs shall not require routine or planned maintenance. Therefore, no fans or moving parts shall be used in the RTU to avoid any need for maintenance. RTU should be constructed to resist the entry of dust. A single technician shall be able to remove and replace RTU modules for repair purposes, without the need for special tools, it should not be necessary to dismantle or remove multiple pieces of the RTU in order to replace a module.

C. Reliability

RTU should normally remain in continuous service to provide SCADA. Failure can result in the interruption of the operation of the railway and a high level of reliability is therefore required. The supplier shall provide the predicted mean time to failure and the mean time to repair of the equipment. Where insufficient historical data is available, the supplier shall state the methods

used to determine the reliability performance.

Availabilities achievable by non-redundant commercial grade equipment should exceed the following:

D. Service life

The RTU supplied shall be capable of performing its intended purpose, for a minimum of 20 years from the date of installation.

2.05 RTU CONFIGURATION TOOLS

A. Contractor shall supply a Laptop with licensed software which shall provide followings capabilities:

1. RTU Data base configuration &Maintenance.
2. Local Operator Interface & RTU Diagnostics.
3. Master Station and RTU simulator protocol analyzer

B. RTU Data base configuration & Maintenance

1. The RTU database Configuration and Maintenance software shall be supplied with the RTU and shall have the following features:
    a. Perform the database modification, configuration, compilation and documentation. The database compiler shall provide error detection services. It shall also perform the downloading of the compiled database into the RTU database.
    b. Monitoring of all inputs, control of all outputs and testing of calculation logic. Monitoring of all inputs and logic at card level, logic level and DNP3 level.
    c. Display of communications statistics and level of eavesdropping of communications channels, including Ethernet, IP, DNP3, Modbus and IEC61850.
    d. Download & upload of RTU software, database configuration and calculations, download the complete configuration from RTU to modify and then upload to RTU.
    e. On-line help.
    f. Display the installed version number of firmware, software and configuration running in the RTU
    g. Configuration and diagnostic software must run on Windows 7
    h. The diagnostic and configuration utility software shall be provided on a CD/DVD with Licenses. The current version number of such software shall be provided. Any costs in upgrading to subsequent version numbers shall be included in the pricing.
    i. Provide standard template for database modelling required for I/O modules,

switchgear DIO & IEDs, communication setting.

j. Provide mapping of the individual data points acquired from one protocol to another protocol for transmission.

2. The database configuration software shall use the same terminology for configuration of the various protocol parameters as specified in the communication protocol standard. It shall be possible for the user to define these parameters.

C. RTU diagnostic

1. The RTU shall have built-in features for monitoring the health of the RTU modules and detecting the type of errors.
2. The diagnostics software shall have diagnostics for the RTU's processor(s), memory, I/O ports, and any other functional areas of the RTU. It shall list the errors recorded by the RTU and provide troubleshooting tools for the RTU.
3. Diagnostic Software shall be provided to continuously monitor the operation of the RTU and report RTU hardware errors to the connected master stations. The software shall check for memory, processor, and input/output ports errors and failures of other functional areas defined in the specification of the RTU.

D. Master station-to-RTU simulator & protocol analyzer software tool:

1. The contractor shall provide a Master station and RTU simulator /Protocol Analyzer software ASE2000-COM (SafeNet Sentinel Pro ™ USB security plug) and ASE 61850 to be used to monitor and test the RTU's operation using the master station communication protocol. It shall have the following features:

a. Capable of emulating both the master station and the RTU messages in the communication protocols DNP3, IEC61850 and Modbus. When the Master station and RTU simulator protocol analyzer software has received or transmitted a message, it shall be possible to immediately "turn around" and transmit or receive a response message.

b. Capability of interfacing to digital side of the RTU for the above purpose.

c. Capable of receiving single and repeated messages using the supplied RTU communication protocol. Each received message shall be checked for validity, including the checksum code. The messages shall be displayed in HEX format or in the ‘interpreted form’ as desired by the user. It shall maintain and display error counters so that the number of errors during a period of unattended testing can be accurately determined.

d. Capable of formatting and transmitting, both as one-time and periodic transmissions, any master station-to-RTU command.

e. Capable of preparing illegal messages, such as messages having invalid check codes, for transmission.

2. The Master station and RTU simulator/ protocol analyzer software shall also be capable of passively monitoring all communication traffic on a channel without interfering with channel operation.
3. Channel traffic captured in the active or passive modes of operation shall be displayed. All fields of a message shall be displayed. A pass/fail indication for the security check code shall be included with each code displayed.
4. The contractor provided simulator /Protocol Analyzer software shall also to be capable of emulating both the RTU and the IEDs messages in the communication protocols DNP3, IEC61850 and Modbus.

2. 06 RTU CONFIGURATION

A. Contractor shall retain the services of the SCADA RTU manufacturer or their authorized representative to be the system integrator to develop RTU configuration files, compile database, program, supervise and perform check-out and start-up of all system components and conduct system integration tests.

B. The RTU point mapping shall comply in every respect with the RTU Point Assignment Charts (PAC) in section 28 40 00 (16051D) and of any supplements thereto that become effective before this Contract is awarded.

C. The contractor shall develop RTU configuration template for each type of RTU supplied and for each type of facility in the contract.

1. Each RTU configuration file template shall include the maximum points and devices for the type of facility as specified on the contract drawings.
2. Each RTU configuration template database shall include the database for WMATA Control Center Master Station (AIM), WMATA SCADA Master Station (AEMS) server and the Local HMI.

D. The proposed RTU and configuration files shall be tested at the WMATA SCADA Lab per section 28 40 06 (16606) paragraph 2.03 “System Compatibility Tests” before the first RTU is shipped for installation.

E. The contractor shall provide all labor, materials, software, configuration, equipment, engineering and incidentals required to perform the system compatibility tests.

F. As a minimum, the contractor shall provide the following equipment and devices. The material provided for Lab Test shall become property of WMATA and shall be used for the training included in this contract and future refresher courses. These equipment and devices shall not be counted as spare parts required by the contract.

1. Each type of RTU System with the following component mounted on an open rack
    a. One Data Concentrator
    b. One Digital Input Module
    c. One Analog Input Module
    d. One Digital Output Module.
    e. 125VAC to 24V DC power supply
    f. One Industrial Computer.
    g. One Display Monitor.
    h. Any other required components
2. Other devices as installed by the contractor.
    a. One DC Relay.
    b. One Power Quality Meter
    c. One Digital Power Meter
    d. One PLC
    e. One set of Rectifier Monitoring EIDs
    f. One Transformer Monitor IED.
    g. One DTR Digital and Analog input module or system.

G. The RTU configuration tools with Laptop specified in the contract shall be provided and used during the LAB and field tests.

H. The contractor shall develop site specific RTU configuration files after successful system compatibility tests.

I. All AS BUILT configuration files shall be provided and become the property of the WMATA, such that the WMATA may make further changes without action from the Contractor. In other words, the system shall be complete and editable by others.

2. 07 SENSORS AND TRANSMITTERS:

A. General:
1. All sensors and transmitter shall use a 24 VDC auxiliary power supply as provided with each RTU.
    a. Auxiliary power supply, 120-volt AC input, 24-volt DC output shall be provided with each RTU for all transmitters.
    b. DC power rating shall be capable of supplying the connected load plus 20-percent spare capacity.

B. Room Temperature Sensors and Transmitters:
1. The contractor shall supply, install and connect Room air temperature transmitters with

the following characteristics:

a. Sensor: Air Temperature Sensor
b. Temperature Range: Minus 20F to plus 120F
c. Accuracy of calibrated points: Plus or Minus 0.5-degree F.
d. Sensing elements: Platinum wire resistance type.
e. Transmitter output signal: 4 to 20 mA DC.

2. 08 RTU Cabinet

Each RTU shall be supplied fully assembled, together with all ancillary equipment, including wiring terminals, mounting rails, wiring ducts & wiring, to form a complete system, subject only to connection of substation equipment to field terminals.

A. Where AC switchgear #1 & 2 are located in the same room, one AC RTU type 1 shall be provided
B. Where AC switchgear #1 & 2 are located in separate rooms, two RTUs shall be provided:
   a. AC RTU type 1 shall be provided and installed in the AC switchgear Room #1
   b. AC RTU type 2 shall be provided and installed in the AC switchgear Room #2
C. One TPSS RTU type for each TPSS
D. One TBS RTU type for each TBS
E. One AC RTU type 1 for Bus and parking garages
F. Refer to Drawing “RTU Bill Of Material” for RTU types
G. Ancillary equipment to be supplied with the RTU includes the following:
   a. 1 x 24v power supplies, 125V DC to 24V DC 240W converters. This is used to power input/output circuits and RTU 24VDC circuits.
   b. 1 x 24v power supplies 120V AC to 24V DC 240W converters. This is used for all external transmitters.
   c. Cubicle switch/lighting and a 120V AC GFI receptacle. The GFI receptacle shall be mounted near the bottom of the RTU cubicle.
   d. RS485 Gas arresters (Quantity will be site specific and shall be specified at the time of order).
   e. pole 125V DC thermal circuit breakers
   f. 3x2 pole DC thermal circuit breakers minimum
   g. 1X2 pole AC thermal circuit breaker
   h. Fuse blocks and fuses as required.
   i. Factory install 4 x 24V DC interposing relays (type cube relay 24V DC or equivalent) These

4 x 24V DC relays are for the Battery Charger, Inverter and transfer switch alarms to be fed to both the RTU and the DTS systems from a single alarm source.

A. Cabinet Construction:

1. Cabinet shall be free-standing, floor mounted and height shall not exceed 72 inch.
2. Construction: NEMA 3R.
3. Apply two finish coats, ANSI No. 61, Light Gray, to exterior surface and Paint interior per manufacturer's standard.
4. Cutout for cable entry at the top and bottom with Non-ferrous cover plates are required for cable entry.
5. Cabinet is with fixed side, rear and roof panels, front swing, full hinged door with three point latch, key, hasp and staple for padlock.
6. Provide Protective pocket inside front cover with schematic diagram, connection diagram, operating instructions, and layout drawing of control wiring and components within enclosure.
7. RTU cabinets shall have a cutout on the cabinet door with Non-ferrous cover plates for installation of a 19” LCD monitor as required.
8. Door & cover plates shall be fitted with long life gaskets, to provide a dust proof environment and shall be suitably earthed with earth straps using flexible earth cable.
9. Dimension: 72”H x 36”W x 24”D
10. All major items of equipment shall be labelled.
11. Din mounting rails shall be sized to provide a minimum of 30% spare space for future expansion.
12. The cubicle shall be grounded to the station ground bus.
13. Provide a simplified means of connecting field cables and RTU cables such that spares can be utilized, additions and alterations can be readily made, and different voltage sources can be utilized.
14. Terminal Blocks:
    a. Terminal blocks located within the RTU cubicle shall define the point of separation between the electrical SCADA RTU and the substation electrical system.
    b. Power Terminals: Rated 30 Amp, 600 Volt with insulating barriers between poles and washer-head binding screws on each pole to accommodate up to 10 AWG wire.
    c. Signal and Control Terminals: Rated 10 Amps, 300 volts, modular construction type, screws to accommodate up to 14 AWG wire.

d. Labels shall be placed to describe each cable from the field and from the RTU.
e. Space shall be allocated between sections of terminals allocated to different cables to provide adequate space for labelling – a minimum label width of 9 mm shall be provided.
f. To facilitate troubleshooting, field cable terminations have been standardized.

15. Fiber Patch Panel for RTU equipment:
    a. Install one Corning SPH-01P Fiber Patch panel with one Corning CCH-CP12LC for connection of multimode fibers.
    b. Install Duplex Multimode fiber patch cords, 50/125 um between the patch panel and the RTU units.
16. Equipment Rack:
    a. 19” rack fabricated from 11GA steel for mounting equipment modules shall be provided. No panel shall be mounted directed behind the equipment rack.
    b. Size: 30” High
17. Nameplate:
    a. Black laminated plastic composition with permanent white engraved lettering, and beveled edges.
    b. Fastened to panel using small round-head screws.
    c. Installed inside cubicle and cabinets with cement.
    d. Submitted for approval.

2. 09 Marking Tags:

A. Dekafix 6.5-FS or equal, consecutive vertical, No. 4682.2 or No. 5766.6 as approved.
B. Group marking carrier with paper marking strip and transparent cover.
    1. Type SCHT5, Catalog No. 2924.6.
    2. Type ES05, Catalog No. 2937.0.
    3. SST5, Catalog No. 2940.0.
    4. Cable shall be labeled at each end to indicate source and destination termination points.

2.10 Raceways, Boxes and Conduit

A. Provide conduit, raceways, boxes and fittings in accordance with Section 34 21 05 (16130)

2.11 WIRING:

A. Status, Control and Analog:
    1. Multicolor cable, UL-listed conductors of 98-percent copper with type XHHW insulation rated 600 volts. Nonmetallic jacket material complying with ICEA S-68-516, NEMA WC8, free of PVC or PVC-based compounds.
    2. Jacket: Chlorosulfanated polyethylene, crossed-linked polyolefin, or heavy duty

neoprene.

3. Use shielded twisted pair cable for analog inputs and outputs.
4. All other IEDs shall be connected to the RTU through the substation network switch.

2.12 SPARE PARTS:

A. In accordance with special conditions or the following, whichever is the stringent:
   1. Provide a minimum of 1 (one) or 20% of the installed components (whichever is higher) per RTU as spare. RTU, Provide touch up paint in 1-quart container.

PART 3 - EXECUTION

3.01 SOURCE QUALITY CONTROL

A. Design and Production Tests: Perform and submit in accordance with the General Provisions and section 28 40 06 (16606), certified test results for the tests on each unit of Remote Terminal Unit supplied under the contract.
B. Factory Acceptance Test in accordance with section 28 40 06 (16606)
C. RTU compatibility tests Test in accordance with section 28 40 06 (16606)
D. CONTRACTOR shall retain a system integrator to supervise, perform check-out and start-up of all system components and conduct system integration tests.

3.02 INSTALLATION

A. RTUs shall be delivered and installed in accordance with approved shop drawings at the following facilities:
   1. Passenger Station AC rooms
   2. Traction Power Substations
   3. Tie Breaker Stations
B. The Contractor shall terminate all wiring on terminal strips in accordance with approved shop drawings and interconnection diagrams.
C. Perform work in accordance with the NEC.
D. Raceways Boxes and Cabinets:
   1. Install conduit, raceways, boxes, fittings in accordance with Section 16130 as necessary to facilitate connections in accordance with Table 2
   2. Wiring in the AC switchgear room between the switchgear and the RTU may be made directly to the RTU without the requirement for an interface cabinet.
   3. Connections to mechanical equipment in the AC switchgear room shall require an interface cabinet
   4. Install wall mounted interface cabinets as necessary in the vicinity of equipment located outside of AC switchgear room.

a. Label the interface cabinet as the AEMS INTERFACE CABINET.

b. Install RTU interface cabinets at locations in accordance with approved shop drawings.

5. Install raceways, wiring and terminations between the interface boxes and the RTU unit in the AC switchgear room.

6. Arrange terminations in interface cabinets in a sequence to facilitate maintenance. Terminations shall comply with the following requirements:

a. Terminal strips shall be identified with markings tags as TB-1, TB-2, TB-3, ext. as required from left to right.

b. Terminals shall be identified consecutively on the various terminal strips from top to bottom and from left to right.

c. Terminations for equipment shall be grouped by equipment identification with control functions located on top and indication functions located on the bottom within the grouping.

d. Terminations for various equipment of the same type/classification such as EF-1 and EF-2 shall be terminated on consecutive terminals from top to bottom in ascending equipment number sequence.

1. Spare terminals shall be concentrated in one area of the terminal strip to the extent possible.

E. Wiring:

1. Use shielded twisted pair cable for analog input and control output signals and multi-conductor cable for all other functions.

2. Install wiring for RTU interface circuits for all points identified for branch circuits to power supplies located in selected RTU interface cabinets and for circuits from power supplies to sensors and transmitters in accordance with the following requirements:

3. Terminate shield drain wire of two-conductor, shielded twisted-pair instrumentation cable on a terminal strip in the RTU interface cabinet located directly below the associated two conductors for the cable. Drain wire shall not be grounded at the interface cabinet. (Drain will be grounded at the RTU)

4. Terminate twisted pair instrumentation cables for analog circuits on terminal strips that are separate from terminal strips used to terminate non-analog circuits.

5. Install twisted pair instrumentation cables for analog circuits in conduits that are separate from conduits used for non-analog circuits.

6. All copper wires from DC switchgear and DC negative switchgear devices shall be terminated at the DC trace recorder terminal blocs.

F. Ground RTU and power supplies in accordance with Section 16060

G. Install auxiliary contacts as required for remote monitoring implementation as shown on drawings.

H. Install thermostats and sensors at locations indicated on drawings with top of thermostat 5'-0" above finished floor.

3.03 POINT ASSIGNMENT CHART FORMAT

A. RTU Point Assignment Chart (PAC) is the listing of the input (status), output (control), and spare data points for each type of facility. The standard WMATA RTU PAC shall be used for all RTU provided to ensure compatibility with SCADA servers. All DNP3, IEC61850 and Modbus control, status and other point addresses must be the same as the existing system addresses for compatibility. Any modifications or change to the PAC must be evaluated and approved before implementation. The contractor PAC which has the same format as the WMATA PAC template, but which also contain additional columns showing RTU termination points must be submitted and used for all integration tests.

B. The RTU PAC shall include as a minimum all points included in the SCADA points listed in table 4.0 in 28 40 00 (16051D) Specifications and shall include any additions, corrections or revisions necessary to provide complete control and indication coverage of all support facilities within the respective RTU control areas, based on the latest information available.

3.04 FIELD TESTING:

B. The Contractor shall perform polarity and continuity test on all interconnection wiring.

C. The Contractor shall perform system start-up for each RTU in the presence of the system integrator. The system integrator shall verify correct operation of each input/output module using a simulated master control interface test unit. Additional checkout shall be made to verify wiring terminations, modem operation, power supply operation and CPU operation.

D. The Contractor shall label all wiring terminations to reflect the connection points.

E. The Contractor is responsible for testing all RTU input signals to verify correct status and telemetry signal levels. A test data sheet shall be developed for each RTU/AEMS Interface Cabinet which list all I/O signal points. The data sheet shall be submitted as part of the Contractors test plan. The Contractor shall submit a list of discrepant I/O signal points to the Engineer. I/O equipment supplied under this contract that is not reporting properly shall be corrected and retested. The Contractor shall submit a discrepancy report for all I/O points indicating problems found and required action.

3.05 SYSTEM INTEGRATION TEST:

A. Refer to section 28 40 00 (16051D) SCADA system work

B. Refer to section 28 40 06 (16606) “SCADA systems Site Acceptance Test Plan”.

END OF SECTION

SECTION 32 05 10

SITING OF NORTH PAVILION AND PEDESTRIAN BRIDGE

PART 1 - GENERAL

1.1 RELATED DOCUMENTS

A. Drawings and general provisions of the Contract, including General and Supplementary Conditions and Division 01 Specification Sections, apply to this Section.

1.2 SUMMARY

A. This Section includes

1. Location requirements for the North Pavilion and pedestrian bridge
2. Relocating existing utility piping if/as required to accommodate North Pavilion and Pedestrian Bridge.

1.3 PRICE AND PAYMENT PROCEDURES

A. Measurement and Payment Procedures:

1. Measurement of work specified in this Section will be made in the following manner:

   a. No separate measurement

2. Compensation for work specified in this Section will be made in the following manner:

   a. Included in pay item for North Pedestrian Bridge and Pavilion.

PART 2 - PRODUCTS

2.1 MATERIALS

A. Provide materials required to construct North Entrance Pavilion, as shown on the General Plans and as required to provide a complete and proper installation.

B. Provide materials required to relocate below-grade piping including piping, joining materials, transitions, fasteners, gaskets, solder, brazing filler, unions, fittings, couplings, sleeves, identification devices, grout, fill, backfill, and other materials required to provide a complete and proper installation.

PART 3 - EXECUTION

3.1 PAVILION LOCATION

A. Design/Builder shall design and construct the North Entrance Pavilion within WMATA Parcel 526, as indicated in the subdivision plat included in this Section.

B. The maximum pedestrian bridge span shall be no greater than 450’-0” between the face of the mezzanine and the face of the pavilion.

3.2 PIPED UTILITY RELOCATION

A. Design/Builder shall design and construct relocation of existing 78 inch and 24 inch pipes and other below grade utilities if/as required to accommodate the North Entrance Pavilion and pedestrian bridge.

B. Coordinate relocation requirements with WMATA and City of Alexandria, and local utility companies, providers, and users, to prevent unauthorized outages during relocation. Take measure to ensure continuity of service. Obtain permissions from every entity possibly impacted by this Work and comply with restrictions imposed.

C. Disconnect, demolish, and remove piped utility systems, equipment, and components indicated to be relocated.

D. If pipe, insulation, or equipment to remain is damaged in appearance or is unserviceable, remove damaged or unserviceable portions and replace with new products of equal capacity and quality.

3.3 PIPING INSTALLATION

A. Install piping according to WMATA, City of Alexandria, and VDOT standards and requirements.

B. Drawing plans, schematics, and diagrams indicate general location and arrangement of piping systems. Relocate piping to prevent conflicts with Work of this Project.

3.4 IDENTIFICATION

A. Piping Systems: Install pipe markers on each system. Include arrows showing normal direction of flow.

END OF SECTION

APPENDIX: DSUP Subdivision Plat Showing Parcels 524A, 612D, and 526

107237

AREA TABULATION:
BEFORE SUBDIVISION

PARCEL 524	835,210 SQ. FT. OR 19.17378 ACRES (TM #016.02-01-02)
PARCEL 612A(RESUB OF PARCEL 512)	33,906 SQ. FT. OR 0.77838 ACRES (TM #016.02-03-01)
TOTAL	869,116 SQ. FT. OR 19.95216 ACRES

AREA TABULATION:
AFTER SUBDIVISION

PARCEL 524A TM# 016.02-01-02	817,853 SQ. FT. OR 18.77532 ACRES
PARCEL 612D TM# 016.02-03-01	27,976 SQ. FT. OR 0.64224 ACRES
PARCEL 526 (WMATA)	23,287 SQ. FT. OR 0.53460 ACRES
PARCEL TOTAL	869,116 SQ. FT. OR 19.95216 ACRES

APPROVED
CITY PLANNING COMMISSION
ALEXANDRIA, VA

CHAIRMAN

DATE — DIRECTOR OF PLANNING

PUBLIC IMPROVEMENT BOND(S) APPROVED

DATE — DIRECTOR T. & E.S.

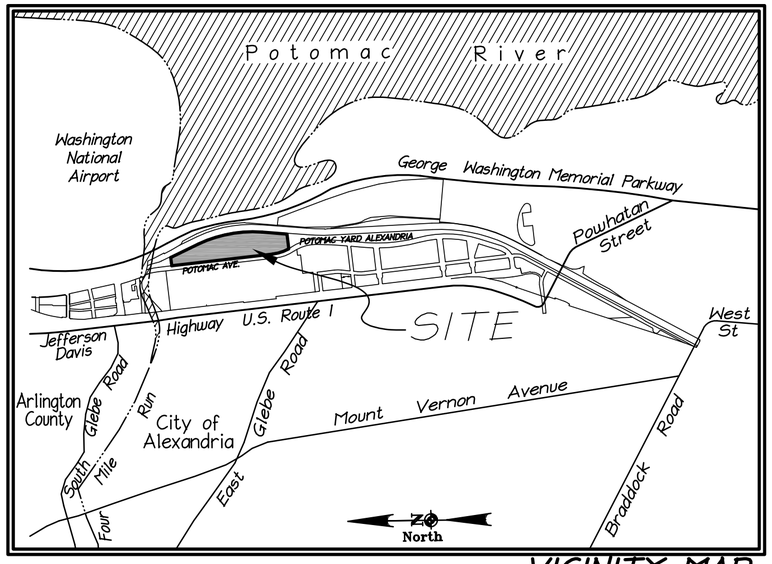

VICINITY MAP
SCALE: 1" = 2000'

GENERAL NOTES

1. THE PROPERTIES SHOWN ARE IDENTIFIED ON THE CITY OF ALEXANDRIA, VIRGINIA GEOGRAPHIC INFORMATION SYSTEM AS TAX MAP #016.02-01-02 AND TAX MAP #016.02-03-01 AND ARE ZONED CDD#10.
2. THE PROPERTIES SHOWN HEREON ARE NOW IN THE NAME OF THE CITY OF ALEXANDRIA ACQUIRED BY THEM AT INSTRUMENT #160018648 TAX MAP #016.02-03-01, AND CPYR THEATER LLC, ACQUIRED BY THEM AT INSTRUMENT #140004968 TAX MAP #016.02-01-02 AMONG THE LAND RECORDS OF THE CITY OF ALEXANDRIA, VIRGINIA.
3. THE OLD AND HISTORIC ALEXANDRIA DISTRICT LIMITS HEIGHTS TO 50 FEET WITHIN 500 FEET OF THE CENTERLINE OF THE HISTORIC GEORGE WASHINGTON MEMORIAL PARKWAY.
4. THIS PLAT HAS BEEN PREPARED FROM DEEDS AND PLATS OF RECORD AND PREVIOUS SURVEYS AND DOES NOT REPRESENT A CURRENT FIELD SURVEY BY THIS FIRM. NO TITLE REPORT FURNISHED.

SURVEYOR'S CERTIFICATE

I, KERRY L. SKINNER, A DULY LICENSED LAND SURVEYOR IN THE COMMONWEALTH OF VIRGINIA, DO HEREBY CERTIFY THAT THIS PLAT IS CORRECT TO THE BEST OF MY KNOWLEDGE AND BELIEF; THAT THIS IS A SUBDIVISION PLAT OF THE LAND CONVEYED TO THE CITY OF ALEXANDRIA AT INSTRUMENT #160018648 AND CPYR THEATER, LLC AT INSTRUMENT #140004968 AMONG THE LAND RECORDS OF THE CITY OF ALEXANDRIA, VIRGINIA, AND IS WITHIN THOSE BOUNDARIES; AND THAT ALL REQUIRED MONUMENTS HAVE BEEN INSTALLED WHERE INDICATED; EXCEPT THOSE THAT WILL BE INSTALLED AT A LATER DATE BUT BEFORE COMPLETION OF THE PROJECT.

COMMONWEALTH OF VIRGINIA
KERRY L. SKINNER
Lic. No. 1593
5/23/2017
LAND SURVEYOR

christopher consultants
9417 innovation drive · manassas, va 20110
phone 703.393.9887 · fax 703.393.9076

SUBDIVISION PLAT SHOWING
PARCELS 524A, 612D, AND 526
BEING A SUBDIVISION OF PARCELS 524 AND 612A
POTOMAC YARD
(INSTR. #160018657 & 080018802)
CITY OF ALEXANDRIA, VIRGINIA

PROJ: 88024.171.00
SCALE: NONE
DATE: 05/23/17
REV:
DRAWN: RLH
CHECKED: KLS
SHEET NO.
1 OF 3

107237

P:\Projects\88024\171100\SURVEYS\Plats\Record\107237 Subdivision Plat.dwg, 5/23/2017 11:47:24 AM, williambradford, 1:1, christopher consultants, ltd.

APPROVED
CITY PLANNING COMMISSION
ALEXANDRIA, VA

CHAIRMAN

DATE — DIRECTOR OF PLANNING

PUBLIC IMPROVEMENT BOND(S) APPROVED

DATE — DIRECTOR T. & E.S.

CURVE TABLE

CURVE	RADIUS	LENGTH	DELTA	CHORD	BEARING	TANGENT
C1	798.59'	320.36'	22°59'05"	318.22'	N18°08'22"W	162.36'
C2	2322.01'	1222.75'	30°10'17"	1208.67'	S10°41'57"E	625.91'
C3	2337.01'	1230.65'	30°10'17"	1216.48'	N10°41'57"W	629.95'

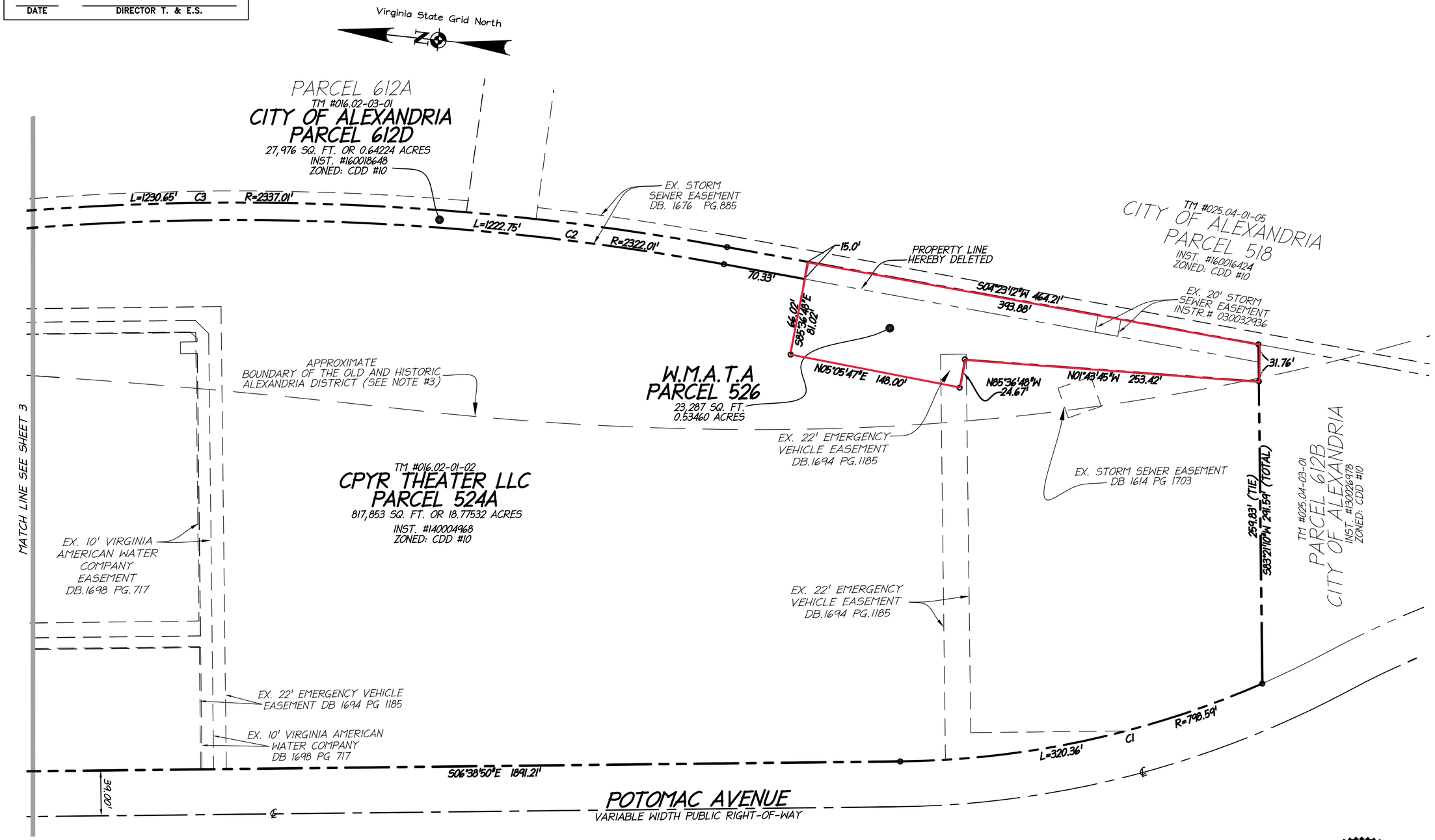

GRAPHIC SCALE

60 0 30 60 120 240

(IN FEET)
1 inch = 60 ft.

COMMONWEALTH OF VIRGINIA
KERRY L. SKINNER
Lic. No. 1593
5/23/2017
LAND SURVEYOR

christopher consultants
9417 innovation drive · manassas, va 20110
phone 703.393.9887 · fax 703.393.9076

SUBDIVISION PLAT SHOWING
PARCELS 524A, 612D, AND 526
BEING A SUBDIVISION OF PARCELS 524 AND 612A
POTOMAC YARD
(INSTR. #110008657 & 080018802)
CITY OF ALEXANDRIA, VIRGINIA

PROJ: 88024.171.00
SCALE: 1 = 60'
DATE: 05/23/17
REV:
DRAWN: RLH
CHECKED: KLS
SHEET NO.
2 OF 3

107237

P:\Projects\88024\171100\SURVEYS\Plats\Record\107237 Subdivision Plat.dwg, 5/23/2017 11:47:24 AM, williambradford, 1:1, christopher consultants, ltd.

107237

APPROVED
CITY PLANNING COMMISSION
ALEXANDRIA, VA

CHAIRMAN

DATE — DIRECTOR OF PLANNING

PUBLIC IMPROVEMENT BOND(S) APPROVED

DATE — DIRECTOR T. & E.S.

CURVE TABLE

CURVE	RADIUS	LENGTH	DELTA	CHORD	BEARING	TANGENT
C1	798.59'	320.36'	22°59'05"	318.22'	N18°08'22"W	162.36'
C2	2322.01'	1222.75'	30°10'17"	1208.67'	S10°41'57"E	625.91'
C3	2337.01'	1230.65'	30°10'17"	1216.48'	N10°41'57"W	629.95'

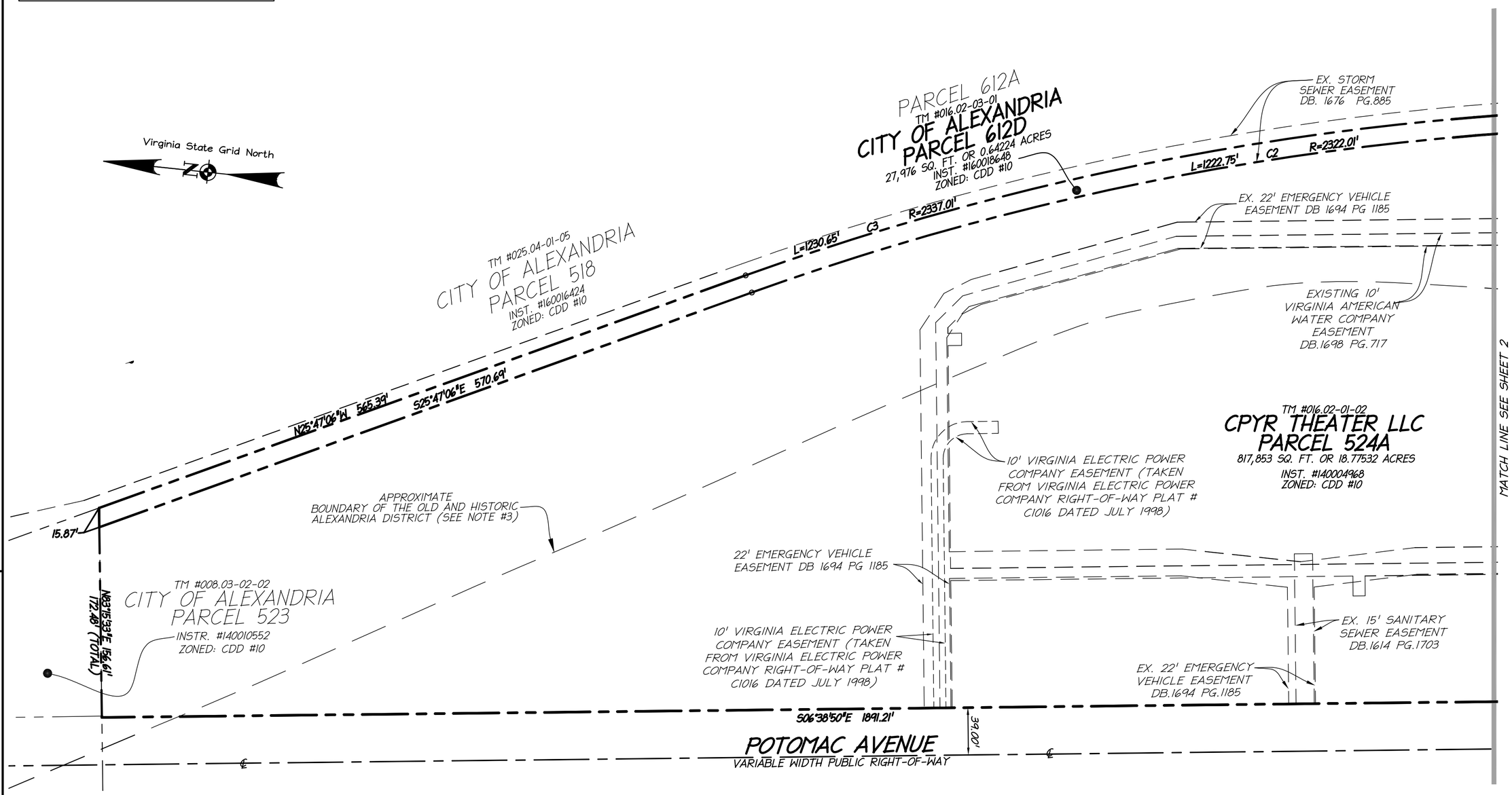

GRAPHIC SCALE

60 0 30 60 120 240

(IN FEET)
1 inch = 60 ft.

COMMONWEALTH OF VIRGINIA
KERRY L. SKINNER
Lic. No. 1593
5/23/2017
LAND SURVEYOR

christopher consultants
9417 innovation drive · manassas, va 20110
phone 703.393.9887 · fax 703.393.9076

SUBDIVISION PLAT SHOWING
PARCELS 524A, 612D, AND 526
BEING A SUBDIVISION OF PARCELS 524 AND 612A
POTOMAC YARD
(INSTR. #110008657 & 080018802)
CITY OF ALEXANDRIA, VIRGINIA

PROJ: 88024.171.00
SCALE: 1 = 60'
DATE: 05/23/17
REV:
DRAWN: RLH
CHECKED: KLS
CHECKED:
SHEET NO.
3 OF 3

107237

P:\Projects\88024\171100\SURVEYS\Plats\Record\107237 Subdivision Plat.dwg, 5/23/2017 11:47:25 AM, williambradford, 1:1, christopher consultants, ltd.

SECTION 34 11 11

BALLASTED TRACK CONSTRUCTION

PART 1 - GENERAL

1.01 RELATED DOCUMENTS

A. Drawings and general provisions of the Contract, including General and Supplementary Conditions and Division 01 Specification Sections, apply to this Section.

1.02 SUMMARY

A. Section Includes: the construction of ballasted track to lines and grades as indicated on the drawings and as specified in these specifications as

1. Preparation of subgrade and placement of sub-ballast and ballast
2. Hauling of construction materials
3. Distribution, lining and spacing of ties
4. Laying, destressing and joining of continuous welded rail (CWR) strings
5. Construction of ballasted track
6. All pertinent trackwork related items associated with track construction such as:
   a. the standard and insulated joints;
   b. rail cutting and stress adjustment;
   c. tamping, surfacing lining and gauging and all other operations necessary to construct an acceptable completed track structure.

B. The Work shall comply with the requirements of Section 34 11 00 – General Track Construction and the AREMA Manual for Railway Engineering as applicable.

C. Unless otherwise shown or specified, trackwork within limits of ballasted special trackwork units is not included in this Section.

D. Related Requirements:

1. Section 34 11 00 - General Track Construction
2. Section 34 11 11.10 - Special Trackwork Construction – Ballasted
3. Section 34 11 16.10 – Electric Flash-Butt Rail Welding
4. Section 34 11 16.15 – Thermite Rail Welding
5. Section 34 11 23.23 - Running Rail
6. Section 34 11 26.13 – Ballast
7. Section 34 11 26.16 - Sub-Ballast
8. Section 34 11 33.14 – Concrete Cross Ties and Fasteners
9. Section 34 11 33.16 - Timber Track Cross Ties
10. Section 34 11 34.16 - Timber Grade Crossings
11. Section 34 11 35 – Wood Preservative Treatment

12. Section 34 11 37 - Restraining Rail and Lubricators
13. Section 34 11 93 - Track Appurtenances and Other Track Material

1.03 PRICE AND PAYMENT PROCEDURES

A. Measurement and Payment Procedures:

1. Measurement of work specified in this section will be made in the following manner:
   a. Ballasted Track Construction: No separate measurement
2. Compensation for work specified in this Section will be made in the following manner:
   a. Ballasted Track Construction: Included in the price of work it is a part

1.04 REFERENCES

A. Reference Standards:

1. AREMA Manual for Railway Engineering Chapter 4, Part 3, Rail Drilling, Bar Punching and Track Bolts
2. AREMA Manual for Railway Engineering Chapter 5, Part 4, Specifications for Track Construction

1.05 SUBMITTALS

A. Product Data: For each type of product.

1. Include construction details, material descriptions, dimensions of individual components and profiles, and finishes for <*Insert product*>.
2. Include rated capacities, operating characteristics, electrical characteristics, and furnished specialties and accessories.

B. Proposed alternatives for performing the Work, if any

C. Samples required for the work specified in this Section

D. Test results required for the work specified in this Section

E. Working Drawings showing the proposed method for temporary fastening of rail during installation

F. Required rail temperature record forms for rail laying and rail fastening operations

G. Five (5) each AREMA approved thermometers as specified in Section 34 11 00, General Track Construction, Article 3.13, Laying Continuous Welded Rail

H. Method and equipment for transport of rail. Documentation that illustrates there is a legal route for properly-permitted trucks to carry rails that are up to 80 feet long. The route shall not include any weight-restricted bridges or roads. Verify that over-length trucks loaded long rails can travel from the railroad yard to the laydown area(s) within 30 minutes travel time. Provide similar documentation that illustrates that long rails may be safely and legally transported from the laydown area(s) to the final installation locations for the rail.

I. Submit for approval detailed procedures of the following items required in connection with laying and joining Continuous Welded Rail (CWR) strings beginning at the rail welding plant site through to its installation in track:

1. String schedule showing length and location of strings.
   a. At least thirty days prior to flash butt welding individual rails into CWR, submit to WMATA for approval, a detailed Rail Schedule in graphical form that illustrates the length and composition of each rail string to be fabricated. Scale ratio of the drawing shall be not less than approximately 1"= 40'). The location of each and every rail in finished track in each individual welded rail string shall be determined and illustrated to within a tolerance of 6 inches. Flash butt welding shall not commence until the WMATA approves the Schedule of CWR Lengths.
   b. Designate in the Schedule of CWR Lengths, the location of each CWR string in finished track by:
      1) Direction of main line traffic; i.e. Outbound main line (OBT), Inbound main line (IBT), or name of auxiliary track; i.e. wye track, pocket track, etc., and
      2) Stationing, (chainage) of both ends of the rail string and,
      3) Right or left rail as determined by facing increasing stationing.
   c. Indicate in the Schedule which strings or which portions of strings will be head hardened. If any strings are to be cut in the field, indicate in the Schedule the locations of the proposed cuts.
   d. Design the lengths of CWR running rail strings to minimize the number of thermite field welds required.
   e. Prior to fabricating each string, record the date rolled including rail mill, weight, section, process, heat number, rail letter and ingot number for each rail stick.
2. Procedures for verification that the subballast has been properly installed and is still in acceptable condition prior to the placement of the bottom ballast layer.
3. Procedures for the correction of subballast deficiencies.
4. Procedures for loading, hauling, placement and compaction of bottom ballast.
5. Procedures for distribution of wood or concrete crossties on the compacted bottom ballast.
6. Specific procedures for laying and anchoring CWR on wood or concrete crossties.
7. Procedure for positioning CWR strings in track, setting rail gaps between strings for closure welds and initial fastening.
8. Procedure for joining CWR strings, including method of obtaining correct gap if joined at a different temperature than at which it was laid.
9. Procedure for destressing/anchoring CWR strings to zero thermal stress temperature, including control of rail movement, the type of equipment used to cool or heat the rail and installing rail clips for fastening of rail to plates or D.F. fasteners including data on mechanical vibrators for relieving internal rail stresses before anchoring.
10. Procedures for loading, hauling and distributing Top Ballast in skeletonized track.
11. Procedures and equipment for raising, aligning and tamping ballasted track to within specified tolerances.
12. Procedures for installing tie anchors without compromising ballast compaction.
13. Procedures for regulating ballast, compacting shoulder ballast and dressing ballast to indicated sections.
14. Procedures for installing restraining rail, including drilling of mounting holes to match spacing of ties and brackets.
15. Comprehensive equipment list for ballasted track construction.
16. Other ballasted track construction activities as may be required.
17. Details of rail grinding equipment and methods of operation. Rail grinder shall be a machine with no fewer than four grinding stones per rail. The grinding wheels shall not be less than 10 inches in diameter and shall have controlled downward pressure to permit grinding more metal per pass at high spots and bridging at low spots less than 10 inches in length.

18. Procedures and equipment for bringing bolts to specified torque, and for calibration of the torque wrench by an independent testing laboratory.
19. Procedures on field welding CWR strings together including welding certificates for all personnel that will perform the welding on the project.
20. Special procedure for closing last string with previously anchored rail or special trackwork.

J. Miscellaneous Submittals to be made during track construction:

1. Completed and signed Record of CWR Laying Form provided in Section 34 11 00 (Exhibit 34 11 00-C / Part 2 of 2).
2. Torque wrench certification records and torque measuring records.
3. Complete and current record of field welds and locations of short rails.
4. Track geometry inspection report
5. Rail end-hardening test results
6. Defect Location Report
7. Shop drawing and product data for tags and monuments used to mark track superelevation track geometry cardinal points and survey control points, including method of attachment

1.06 QUALITY ASSURANCE

A. In order to determine the acceptability of the installation, the Contractor shall make a survey of the completed track, and provide the Engineer with a copy for review. Deviations from the drawings which exceed tolerances specified in Section 34 11 00, General Track Construction, shall be corrected by the Contractor at no additional cost to WMATA.

B. Develop and maintain a quality program for trackwork fabrication and installation that regulates methods, procedures, and processes to ensure compliance with standards of quality required by the Contract Documents in accordance with Section 01 47 00 and the following.

C. General Requirements:

1. Conform to American Railway Engineering & Maintenance of Way Association (AREMA) "*Portfolio of Trackwork Plans*" and "*Manual for Railway Engineering (latest edition)*," except as modified by the Contract Documents.
2. Engage qualified suppliers to furnish products required for this work. Verify that the quality programs of suppliers meet the requirements of this contract. Include copies of supplier quality programs in submittals to the Authority.
3. Use proper tools and techniques.
4. Use a qualified land surveyor licensed in the State in which the project is located (Virginia, Maryland, District of Columbia) to establish and maintain alignment and elevation.
5. Electrical isolation of the running rail from earth is essential to contain the returning traction power current within the running rails. Clean the site of miscellaneous materials and contaminants such as moisture, dirt and debris, and metallic wires and banding used in component packaging. All tracks shall be tested for electrical isolation prior to final acceptance. Correct electrically-deficient trackways. The trackways must pass the electrical isolation test before final acceptance. Provide a minimum seven-day notice to the Construction Manager for scheduling of the track isolation testing.

D. Installer Qualifications: Qualifications of Contractor personnel in a supervisory role (trackwork superintendent, trackwork foreman that will oversee the performance of work and all types of and

grades of welders, demonstrating their experience in track construction including appropriate certifications.

1. Superintendent shall have at least 15 years' experience in construction, with at least 10 years' experience in railway track construction and maintenance, at least 5 of which shall be in the construction of trackwork for an electrified rail transit system.
   a. No less than 10 years of the superintendent's experience shall have been at a level of foreman or above. If the work includes direct fixation track, the superintendent shall have not less than 2 years' experience in direct fixation track construction.
2. Foremen shall have at least 7 years' experience in construction with at least 5 years' experience in railway trackwork, not less than 2 years' experience in the construction of the types of track to be constructed under the Contract, and not less than 2 years' experience at the foreman level.

E. WMATA Inspections:

1. Provide WMATA with a testing schedule and keep the schedule current. Give written notice to WMATA when tests are to occur.
2. Provide at least 30 days advance notice of the availability of an item for inspection.
3. At any time during the Contract, afford WMATA full access without charge to all facilities necessary for examination of the work to satisfy WMATA that the materials, as well as the finished product, comply with these Specifications.
   a. Provide WMATA with access to all quality control tests, measurements and documentation.
   b. Present material for inspection in a safe area away from excessive noise and manufacturing activities.
   c. Regular examination of the product will take place during normal working hours.

PART 2 - PRODUCTS

2.01 MATERIALS

A. The following track materials shall be furnished by the Contractor and any additional items necessary to construct an acceptable, completed track structure.

1. Sub-ballast
2. Ballast
3. Wood Ties and Fasteners
4. Concrete Ties and Fasteners
5. Special Trackwork
6. Running Rail
7. Track Appurtenances and Other Track Material
8. Metal Tags (to mark superelevation)
9. Restraining Rail and Lubricators (as required)
10. Bumping Posts (as required)

B. Unless otherwise shown or approved the rail fastenings for all mainline concrete ties for ballasted track shall consist of pre-assemble rail fastening complete with insulated tie pads and captive resilient rail fastener assembles.

2.02 MOTORS

A. Use track construction equipment and tools that are in accordance with the requirements of AREMA Manual for Railway Engineering, Volume 3, Chapter 27 Maintenance-of-Way Work Equipment, Part 2 Roadway Machines (latest edition).

B. Compacting Equipment:

1. For compacting the base layer of ballast, furnish self-propelled, pneumatic-tired roller or vibratory compactors with the following characteristics will generally provide satisfactory results when properly operated:
   a. Gross weight: 5,000 pounds
   b. Drum width: 58 inches
   c. Drum diameter: 42 inches
   d. Dynamic load: 18,000 pounds
   e. Load frequency: 1,100 to 2,000 vibrations per minute

2. For compacting placed ballast in track, furnish vibratory squeeze-type tampers with new tamping blades:
   a. Ballast tampers used on this Contract must have new tamper blades installed at the beginning of the Contract and prior to performing the Work.
   b. Maintain tampers according to manufacturer's specifications.

3. For consolidation of the crib and shoulder portions of the track ballast section, furnish rail-mounted railroad maintenance-of-way equipment specifically designed for the purpose.
   a. Furnish equipment capable of consolidating two cribs and both ballast shoulders simultaneously.
      1) Each crib consolidating tool set furnished shall consist of four tools, one on each side of each rail.
         a) Furnish adjustable crib consolidating tools that accommodate the tie spacing specified.
      2) Furnish shoulder consolidating tools a minimum of 60 inches long with trailing and leading edges contoured to prevent the ballast from flowing.
         a) Center the shoulder consolidating tools above the centerline of the two crib-compacting tool sets.
      3) Furnish horizontal shoulder tools capable of consolidating the shoulder with 1-inch minimum nominal clearance between the tool and the tie end.
      4) Furnish adjustable shoulder slope tools having a minimum width of 12 inches and capable of adjusting the angle of slope.
         a) Furnish ballast crib and shoulder tools operating in the range of 2,100 to 3,500 vibrations per minute.
         b) Furnish equipment capable of maintaining vibration amplitude between 0.04 inch and 0.2 inch.
         c) Furnish equipment capable of automatically timing the duration of the cycles between 3 to 5 seconds.

4. The compacting equipment selected by the Contractor is subject to inspection and acceptance by WMATA.

PART 3 - EXECUTION

3.01 GENERAL

A. All ballasted main/primary track shall be constructed with Pandrol spring clips, elastic fastener tie plates punched for four 7/8 inch screw spikes and four 7/8 inch screw spikes.

B. Track within the limits of ballasted special trackwork units shall be constructed as specified for Special Trackwork Construction.

C. Ballasted track construction includes realignment of existing tail tracks to meet with the new track alignments to be extended.

D. Ballasted track construction includes placing sub-ballast and ballast, distributing and lining ties; installing, anchoring, and joining CWR strings, raising and lining track; and other incidentals as required and as specified in Section 34 11 00, General Track Construction as modified. Please note, the subballast may be constructed under a separate contract.

3.02 TOLERANCES FOR BALLASTED TRACK

A. Deviation from the gauge, cross level, superelevation, horizontal alignment and vertical alignment shall not exceed the tolerance as specified Section 34 11 00, General Track Construction.

3.03 PLACEMENT OF SUB-BALLAST

A. Subballast shall be distributed, placed and compacted in accordance with Section 34 11 26.16, Sub-ballast.

B. Prior to placement of subballast all trash and debris shall be removed from subgrade.

C. Verify that all trenching of the subgrade has been completed and acceptably backfilled prior to placing subballast and ballast as may be necessary for (but not limited to) the following: drainage pipes, signal conduits, traction power negative and positive feeders and jumpers, and direct burial cables. Contamination of the ballast and subballast that occurs after track construction due to late installation of items buried in the subgrade shall be corrected at the Contractor's sole expense.

D. Subgrade shall be clear and void of tire ruts, large stone or other deleterious objects before placement of subballast.

E. Subgrade shall be dry before placement of subballast.

3.04 INITIAL LAYER OF BALLAST

A. Definition: bottom ballast is defined as an initial layer of ballast that is installed over the subballast prior to construction of skeleton track so as to provide a uniform platform for the assembly of track and minimize the vertical raising of the assembled track during track surfacing.

B. Verify that the subballast has been properly prepared to receive the ballasted track construction. Confirm that line, grade, cross slope and thickness is all within specified tolerances. Arrange for deficiencies to be corrected by the responsible party.

C. All rutting and pocketing of the roadbed shall be corrected by restoring the roadbed to a smooth surface.

D. Uniformly spread and compact each lift of ballast within the initial layers with not less than four passes of compacting equipment before tie distribution. The ballast shall not be distributed on the roadbed until the subballast has been approved. Subballast fouled or distributed by the Contractors operations shall be repaired by the Contractor at no additional cost to WMATA.

E. Haul and place ballast material in such a way that damage to the adjacent track area is avoided.

F. The initial layer of ballast shall be limited to a total compacted depth that will establish the track surface at least four inches below final grade, with further provision that each compacted lift shall be a maximum depth of four inches.

G. The ballast depth shall conform to the cross sections shown. The minimum depth of ballast from the bottom of tie to the top of subballast is 12 inches for mainline track. Each lift of ballast shall be uniformly spread. Each lift of ballast shall be fully compacted by a self-propelled pneumatic-tired roller or a vibrating compactor and shall not exceed a depth greater than 4 inches.

H. If concrete ties are used, after compaction and before placement of skeleton track, shape the base layer of ballast to provide a hollow) at the center line of track to protect concrete crossties from centerline cracking due to center bound ballast support.

I. The self-propelled pneumatic-tired roller shall have a minimum gross weight of nine tons and the vibratory compactor shall have a minimum weight of 5,000 pounds capable of applying a dynamic load of 18,000 pounds or more. The equipment selected by the Contractor shall be subject to approval by the Engineer.

3.05 DISTRIBUTION AND SPACING OF TIES

A. All ties shall be carefully distributed and properly spaced on the initial layer of ballast with every fourth tie being a contact rail tie unless otherwise specified or shown.

B. Care shall be exercised in the placement of contact rail ties to ensure the proper offset for contact rail supports.

C. Unnecessary handling, distribution and reloading of ties shall be avoided. To the extent practicable, ties shall be distributed in proper position for use without further handling. They shall be unloaded in a manner that will not damage the ties. In no case shall ties be dropped. Ties shall be moved only with tie tongs or by leverage with a bar.

D. Ties shall be installed radially on curves and at right angles to the centerline of tangent track at the designed spacing prior to rail installation. The lined side shall be the outside of each track for all main and yard/storage lead tracks. Main track shall be considered double track regardless of separation.

E. Install wood ties with heartwood down at right angles to the track.

F. Contact rail ties shall be installed to properly support the contact rail on the side of the track as shown. The line end shall be lined with the adjacent ties.

G. Ties damaged as a result of improper handling by the Contractor and rejected by the Engineer shall be removed and replaced with new ties.

H. Ties shall be positioned using tie tongs, lining bars, other suitable tools or tie spacing equipment. Do Not use picks or hammers to position ties.

I. Timber ties shall be adzed only with the Engineer's approval and shall be installed with the heartwood face down.

J. Tie Boring:

1. All timber ties shall be pre-bored by the manufacturer. Timber tie boring shall be performed with the heartwood face down. Kerf marks will be cut by the manufacturer in every 8 foot 6 tie to signify heartwood is facing the proper direction for added water protection. For cut spikes, the holes shall be 9/16 inch in diameter and not less than five inches or more than six inches deep.

For screw spikes, the ties shall be bored as directed by the manufacturer or as directed by the Engineer. The location and number of holes shall conform to the location and number of spikes required for the type of track or special trackwork unit in which the tie is to be installed. Boring of holes in excess of the number of spikes used will not be permitted.

2. A tolerance of plus or minus 1/16 inch will be permitted in the distance between spike holes. The spike holes shall be located in such a manner that each tie plate will be centered on the tie at a right angle to the rail when the spikes are driven into place. A tolerance of 1/8 inch in the centering of the holes across the width of the tie will be permitted. Timber tie holes shall be treated with pentachlorophenol oil or creosote immediately after boring.

K. Specialized lifting equipment is needed to install concrete ties.

L. Tie Spacing:

1. Wood Ties shall be spaced on an average of 27 inch centers, for main track unless otherwise shown.
2. Concrete Ties shall be spaced on an average of 30 inch centers, for main track unless otherwise shown.
3. Tie spacing at approach slabs shall be as shown in the Contract Drawings.
4. Tie spacing on restraining rail track shall be on an average of 24 inch centers.
5. Do not allow the distance between centerlines on adjacent crossties to vary more than plus or minus 1 inch from the tie spacing requirements for ballasted tracks.

3.06 LAYING CONTINUOUS WELDED RAIL (CWR)

A. Laying, anchoring and joining CWR shall be as specified in Section 34 11 00, General Track Construction.

B. Zero Thermal Stress Temperature or Force Free Temperature (FFF)

1. The rail shall be anchored at the Preferred Rail Laying Temperature (PRLT) of 95° F, plus or minus 10° F.
2. The temperature of opposite rails when anchored shall be within 5° F of each other.

C. Fastening Rail To Ties

1. Materials for fastening rail to ties shall be as specified in Section 34 11 93 for Track Appurtenances and Other Track Material.
2. Standard rail clips shall be the left hand drive type Pandrol E Clip Fastening System with U shoulders for use with rail having a 5 ½” base shall be installed under running rails for wood tie construction. The Pandrol Tie Plate shall be secured to the wood tie using 4 screw spikes per plate.
3. Pandrol clips shall not interfere with joint bolts. Pandrol “J” clips or “C” clips are required at all standard, bonded and insulated joint locations.
4. The C-Clip requires a special toe plate and clip assembly at rail joints.
5. J-Clips are simply the clips and are acceptable. There are various types of J-Clips depending on its use. Since the lip of the joint bar is higher, the J-Clip reaches up to make contact with the lip.
6. In each rail clip application, drive in a direction parallel to the length of rail.
7. Prior to installing tie plates, the contact surfaces of the tie plates shall be cleaned to allow full bearing of the tie plate upon the tie. Tie plates shall be centered on the tie and placed normal to

the centerline of the rail so that the outside shoulder of the plate will have full bearing against the base of rail.

8. For AREMA double shoulder tie plates, spikes shall be started vertically and square and driven straight. Straightening of spikes will not be permitted. Spikes bent during driving shall be withdrawn and the holes plugged with treated tie plugs as specified in Section 34 11 93 Track Appurtenances and Other Track Material.
9. Tie plates must be placed so that no part of the shoulder is under the base of the rail. Care must be taken to place the wider toe outside rail.
10. No object which causes a concentrated load by solely supporting a rail shall be allowed between the base of the rail and the bearing surface of the tie plate.
11. Care must be exercised to avoid striking concrete ties when applying or removing resilient fasteners.

D. Rail Anchoring: Installation of Pandrol spring clips shall be considered as anchoring the rail.

3.07 SURFACING AND LINING

A. Top Ballast Distribution

1. After the skeleton track has been installed and brought to approximate line, place top ballast in the tie cribs and shoulders of the track structure to restrain movement of the ties due to temperature changes in the CWR. Unload ballast in sufficient quantities which will form a high shoulder and will fill the tie cribs and provide an adequate amount of ballast for the initial track lift, plus a surplus as required to continue to hold the track in line after the initial track lift.
2. Inspect the skeleton track before a ballast train or other track equipment is allowed to pass over the track.

B. Surfacing and Lining

1. Track surfacing shall be done by methods which will prevent undue bending of the rail or straining of the joints.
2. The amount of track lift shall not exceed four inches nor endanger the horizontal or vertical stability of the track. The track shall be given at least two raises of not less than one inch and no more than three inches each raise.
3. All ties pulled loose during surfacing shall be replaced to full bearing against the rail and properly secured.
4. Track surfacing will not be permitted until the cribs are filled with ballast nor will surfacing be permitted when the ambient temperature is higher than 105 deg. F.
5. Prior to adjusting CWR to the specified zero thermal stress temperature, the track shall be raised and tamped only to an elevation where it will still be necessary to give it a final lift of 2 inches nominal to bring it up to grade.
6. The final surfacing pass to bring the track to grade shall be performed after the CWR has been brought to zero thermal stress temperature, anchored, and closure welds made between CWR strings.
7. Horizontal Alignment:
   a. Exercise care to prevent track from being forced out of alignment by heat expansion, and maintain full cribs at all times.
   b. Maintain alignment during the lifting operations

C. Tamping

1. Tamping of ballast shall be done with approved power tamping equipment of the vibratory squeeze type. Control or cycling of the power tamper shall provide the maximum proper compaction of ballast uniformly along the track.

2. Tamping Procedures
   a. As part of the required Work Plan, prepare a detailed tamping procedure that describes the proposed tamping equipment and methods for its use. Include a complete description of the equipment to be used and variables that can be adjusted such as:
      1) Number of tamping tool insertions per tie;
      2) Number of passes made by the tamping machine;
      3) Depth of penetration of the tamping tool, noting differences if any, required when working track with different ballast depths beneath the tie and differences in tie depth when transitioning to/from wood and concrete ties;
      4) Length of time tamping tool remains down;
      5) Method of tamping around restraining rails and special trackwork areas;
      6) Method of tamping at transition slabs;
      7) Differences, if any, between initial lifts and final surfacing passes
   b. Qualify the proposed tamping procedure specified herein as follows:
      1) In the presence of WMATA, tamp 100 feet of sample track in accordance with the proposed tamping procedure.
      2) After the sample track is tamped, remove three ties to enable WMATA to observe the tamped ballast under each tie and determine conformance with the requirements specified herein.
      3) After inspection and acceptance by WMATA, replace the three ties and re-tamp them plus any adjoining ties disturbed during the removal and reinsertion.
      4) If tamping does not produce compaction meeting the required criteria as stated herein, adjust the tamping variables and re-tamp until the required criteria for qualification of the procedure are met.

3. Perform all production compaction in accordance with the procedure approved by WMATA in accordance with requirements herein:
   a. Perform all production compaction in accordance with the procedure approved by WMATA in accordance with requirements herein.
   b. Tamp ballast tightly under and around the tie from a point 15 inches inside each rail on both sides of the tie and extending to the ends of the tie. Ballast rock shall be full consolidated and firmly interlocked.
   c. Do not compact ballast around the center of the tie between the above limits, but fill the center lightly with ballast.
   d. Simultaneously tamp both sides and both ends of the tie, tamping inside and outside the rail at the same time. Thoroughly tamp the ballast under the rail seat.
   e. Tamp the ballast during every rail lift of the rails.
   f. Undertake tamping prior to installation of restraining rail.

4. Ties damaged by Contractor in any fashion by tamping of ballast shall be replaced at no cost to WMATA.

D. Final Surface and Alignment

1. The final surface and alignment of all track shall be within the specified ballasted track construction tolerances, executed by machines with automatic lining equipment or with combined lifting, lining and tamping equipment. Final tamping and lifting shall be effected by equipment fitted with tamping heads between axles or of arch -bar construction.

2. After the final surfacing and alignment of track is completed the ballast shall be dressed to conform to the ballast section shown and as directed by the Engineer. The portion of sub-ballast outside the toe of slope of the ballast shall have a smooth, even surface, sloped as shown.

3. A manual dressing, as directed by the Engineer will be required to ensure a one inch clearance between the base of rail and top of ballast.

E. Ballast Consolidation and Dressing

1. Following tamping and lining, but prior to installation of contact rail and insulators, the crib and shoulders of all track shall be compacted by a machine specifically designed to compact the crib and shoulders simultaneously. The compactor shall operate on all shoulders and in those cribs where special trackwork components do not interfere with the operation of the machine. After compaction of ballast no further shaping of the ballast section will be permitted except as directed by the Engineer.

2. The crib compacting tool work faces shall measure nine inches by 14 inches with the nine-inch dimension parallel to the rail. Crib compacting tool work faces shall appear as flattened Vs when viewed normal to the nine-inch dimension and the depth of the V shall be 3/4-inch plus or minus 1/16-inch. There shall be a minimum of eight crib compacting tools, two on each side of each rail. The shoulder compacting tool work faces shall conform to the designed ballast section outline from 1-1/2 inches beyond the tie ends horizontally to the beginning of the 2:1 shoulder slope, continuous to within six inches of the ballast toe at the sub-ballast. The length of work faces in the direction of travel shall not be less than 33 inches, with flared ends in the direction of travel to avoid plowing of ballast shoulders. For superelevated and spiraled sections, the shoulder tools shall be adjustable such that the 2:1 ballast shoulder slope will be maintained as shown.

3. The compacting tool work faces shall vibrate with a frequency between 2200 and 3000 Hertz. The vibrational amplitude shall be between 0.058 inch and 0.117 inch. The vibrating work faces shall apply a pressure between 14 psi and 21 psi to the surface of the ballast. The pressure applied shall be the same for all operations and remain constant throughout the job and shall be monitored by a permanently affixed calibrated pressure gauge. The compacting tools shall be applied to both crib and shoulders for a period of between three and six seconds duration at each crib successively.

4. Ballast Dressing
   a. After the final surfacing and alignment of track has been completed, dress the ballast to conform to the ballast sections indicated on the Design Plans. Re-slope subballast outside the toe of slope of ballast that has been fouled or disturbed by the Contractor's operations to the cross sections indicated on the Design Plans.
   b. The final ballasting, raising and aligning operations shall leave the cribs and shoulders full with ballast to within 1 inch below the top of ties. Ballast shall be dressed so as to not touch or be within 1 inch of the base of rail.
   c. Do not operate equipment and vehicles on ballast shoulders after dressing and consolidation. Dress and reconsolidate ballast shoulders to repair damage caused by the Contractor's forces at no additional cost to WMATA.

F. Ballast Inspection: The Contractor shall remove a maximum of one percent of the ties, selected at random by the WMATA Engineer, to allow inspection of the ballast compaction beneath the ties to determine the variables of each piece of tamping and compaction equipment and for spot checking of the production work.

G. Superelevation Marker Tags

1. The required amount of superelevation in ballasted tracks shall be shown on metal marker tags affixed to the tops of ties.

2. Tags shall be placed at start of superelevation to show zero superelevation and at every 1/8 inch change until full superelevation is reached.

3. Tags shall be fastened with two nails to the top of the nearest tie approximately one foot inside the high rail and shall be placed so they can be read while facing against the traffic, on tracks of assigned direction. Tags shall be placed at the point of full superelevation so that they may be read facing the high rail, to plainly indicate the authorized full superelevation.

4. Tags shall be made of a corrosive-resistant metal such as anodized aluminum or brass. Fastening nails shall be of the same material as the tags.

5. Tags shall be stamped in 1/4 inch increments from zero superelevation to maximum superelevation. Whole numbers and fractions shall be stamped in characters ½ inch minimum in height.
6. Tags shall be a minimum of .050 inches thick, 1-1/4 inches wide and two inches long.

3.08 FIELD QUALITY CONTROL

A. Spot check ballast compaction achieved and compare against the results observed and accepted during the qualification for the ballast compaction procedure as indicated in Article 3.07 herein. Spot check once in every 500 ties tamped, unless otherwise directed By WMATA.

END OF SECTION

SECTION 34 11 12

DIRECT FIXATION TRACK CONSTRUCTION

PART 1 - GENERAL

1.01 RELATED DOCUMENTS

A. Drawings and general provisions of the Contract, including General and Supplementary Conditions and Division 01 Specification Sections, apply to this Section.

1.02 SUMMARY

A. Section Includes: Construction of direct fixation (DF) track, as indicated on the Drawings and to include the following:

1. Grout Pad Retrofit Construction
2. New Concrete Plinth Construction
3. Requirements for qualifying the construction methods;
4. Surface preparation of existing concrete and stirrups;
5. Forming, placing, and curing reinforced track concrete with embedded inserts;
6. Installing DF rail fasteners;
7. Installing continuous welded rail (CWR)

B. Related Requirements:

1. Section 03 10 00 - Concrete Formwork
2. Section 03 20 00 - Concrete Reinforcement
3. Section 03 30 00 - Cast-in-Place Structural Concrete
4. Section 34 11 00 - General Track Construction
5. Section 34 11 12.10 - Special Trackwork Construction - Direct Fixation
6. Section 34 11 16.10 – Electric Flash-Butt Rail Welding
7. Section 34 11 16.15 – Thermite Rail Welding
8. Section 34 11 23.23 - Running Rail
9. Section 34 11 36.13 - Direct Fixation Rail Fasteners
10. Section 34 11 37 - Restraining Rail and Lubricators

1.03 PRICE AND PAYMENT PROCEDURES

A. Measurement and Payment Procedures:

1. Measurement of work specified in this Section will be made in the following manner:
   a. No separate measurement.

2. Compensation for work specified in this Section will be made in the following manner:
   a. Included in the price of the work of which it is a part.

1.04 REFERENCES

A. Abbreviations and Acronyms:

1. SSPC – The Society for Protective Coatings

B. Definitions:

1. Direct Fixation Fastener (DFF) – Elastomeric pads incorporated in the fastener to provide vertical and horizontal flex which assists in the reduction of noise, vibration and impact.
2. Direct Fixation Track Construction (DFTC) - Installation of grout pads or concrete plinths and direct fixation rail fasteners, installing running rail, anchoring, joining CWR strings and other incidentals as specified.
3. Grout Pad Retrofit Construction - This form of direct fixation track construction will involve retrofitting an existing reinforced concrete deck or concrete invert with a new DFF system by replacing the existing grout pad configuration with new grout pads including the coring and installation of new 7/8” diameter fully threaded anchor studs which are set into the invert with the DFF held down by nuts and washers over the bottom plate.
4. New Concrete Plinth Construction – This form of direct fixation track construction will involve a two-pour method for new DFF track construction where the recessed rectilinear concrete blocks or plinths are poured after the concrete deck has been constructed.

C. Reference Standards:

1. AASHTO M148-05-UL – Standard Specification for Liquid Membrane-Forming Compounds for Curing Concrete
2. AASHTO T277-07-UL – Standard Method of Test for Electrical Indication of Concrete’s Ability to Resist Chloride Ion Penetration
3. AREMA, Volumes I and II (latest edition), Chapter 4, Part 3, Rail Drilling, Bar Punching, and Track Bolts
4. AREMA, Volumes I and II (latest edition), Chapter 5, Part 4, Specifications for Track Construction
5. ASTM A325 - Standard Specification for Structural Bolts, Steel, Heat Treated, 120/105 ksi Minimum Tensile Strength
6. ASTM A449 - Standard Specification for Quenched and Tempered Steel Bolts and Studs
7. ASTM C33 - Standard Specification for Concrete Aggregates
8. ASTM C39 - Standard Specification for Compressive Strength of Cylindrical Concrete Specimens
9. ASTM C109 - Standard Test Method for Compressive Strength of Hydraulic Cement Mortars (Using 2 inch Cube Specimens)
10. ASTM C150 - Standard Specification for Portland Cement
11. ASTM D2240 - Standard Test Method for Rubber Property - Durometer Hardness
12. ASTM D2936 - Standard Test Method for Direct Tensile Strength of Intact Rock Core Specimens (C900 - STM for Pullout Strength of Hardened Concrete)
13. SSPC-SP 1 – Solvent Cleaning

14. SSPC-SP 5 – White Metal Blast Cleaning

1.05 SUBMITTALS

A. A work plan shall be submitted for approval prior to the beginning of construction. The work plan shall include a step-by-step construction sequence accompanied by descriptions and sketches as needed to describe the following:

1. Retrofit of Existing Grout Pads
   a. The method of laying out the work including grout pads, anchor studs and fasteners, to result in finished track meeting alignment requirements within the specified tolerances.
   b. The method for demolishing the existing grout pads including removal of existing anchor studs.
   c. Method to score, roughen, air blast, or other effective means to remove all loose laitance and debris from the structure deck surface within the grout pad areas for bonding of plinths.
   d. The method of preparing concrete invert surfaces to obtain the specified bond between new grout pads and existing deck surface.
   e. The method of locating and drilling new anchor stud holes and setting the studs to specified position and elevation when the track has been realigned and the existing location of the anchor stud holes cannot be reused since they do not match the proposed anchor stud location. Include hole diameter and depth.
   f. Procedures to avoid impacting the existing rebar grid within the concrete deck when drilling new anchor stud locations that do not match the existing locations, since these locations will clear the existing rebar grid.
   g. Procedure for resetting new anchor studs within the existing anchor stud hole when new grout pads are constructed.
   h. If required, perform an existing anchor stud survey prior to removing these studs for the purpose of re-establishing the stud location after the grout pads have been poured for the installation of new anchor studs.
   i. The details for securing the fastener anchor studs in the trackbed invert including the following:
      1) Brand/manufacturer of each component
      2) Temperature range of substrate for setting anchor studs and curing anchor material supported by test data
      3) Wetness range for placing and curing anchor material
      4) Packing, storing, handling, proportioning, mixing and placing details
      5) Hole cleaning, brushing, blowing and drying details
      6) Anchor stud cleaning and degreasing details
      7) Method for measuring and controlling substrate temperature during setting and curing of material
   j. Details of the anchor studs including shop drawings or catalog cuts and certification of chemical composition and physical characteristics to verify compliance with these specifications.
   k. The details of the grout pad sizes, and procedures for forming, mixing, placing and curing including items 4. a. thru d. and g. above.
   l. The grout mix design identifying materials, proportions and additives.
   m. Curing materials for grout pads.
   n. Structural Analysis Report when construction involves an existing aerial structure to ensure that all the contractor's Roadway Maintenance Vehicles that will be used on the project will apply loads to the aerial structures less than or equal to the loading permitted under WMATA's standard Rapid Transit Vehicle Design Loading or WMATA's Standard Crane Car Loading. The analysis will also include loading resulting from the equipment operation at the work site. The technical specifications of all the equipment as well as construction

material and equipment to be transported to and from the work site shall be provided by the contractor.

2. New Concrete Plinth Construction
   a. The two methods of construction that are generally used as detailed below. The Contractor may employ either method or, if appropriate, utilize both methods at different locations on the work site as approved by WMATA:
      1) Top-down construction: This method uses track gauge jigs for supporting skeleton track (rails and direct fixation rail fasteners) in proper horizontal and vertical alignment. Concrete forms and reinforcing steel are installed in the conventional manner. Concrete is then poured beneath the suspended direct fixation rail fasteners.
      2) Bottom-up construction: Concrete forms and reinforcing steel are installed in the conventional manner. Jigs are positioned to hold the embedded female anchor inserts in proper position. After concrete curing, the direct fixation rail fasteners and rails are installed.
   b. The method of laying out the work including plinths, with reinforcement bars, inserts and fasteners
   c. The method for setting inserts to the specific position and elevation prior to placement of concrete and maintaining them in position
   d. The details of plinth sizes and procedures for forming, mixing, placing and curing
   e. The plinth concrete mix design identifying materials, proportions and additives
   f. Curing materials for plinths
   g. Plinth concrete compressive test report
   h. Insert pull-out test report
   i. Quality control program

3. General Track Requirements
   a. Required rail temperature record forms for rail laying and rail fastening operations as specified in Section 34 11 00, General Track Construction.
   b. Five (5) each AREMA approved thermometers as specified in Section 34 11 00, General Track Construction.
   c. Method and equipment for transport of rail.
   d. Submit for approval detailed procedures of the following items required in connection with laying and joining CWR strings:
      1) String schedule showing length and location of strings.
         a) At least thirty days prior to flash butt welding individual rails into continuous welded rail (CWR), submit to WMATA for approval, a detailed Rail Schedule in graphical form that illustrates the length and composition of each rail string to be fabricated. Scale ratio of the drawing shall be not less than approximately 1”= 40’). The location of each and every rail in finished track in each individual welded rail string shall be determined and illustrated to within a tolerance of 6 inches. Flash butt welding shall not commence until the WMATA approves the Schedule of CWR Lengths.
         b) Designate in the Schedule of CWR Lengths, the location of each CWR string in finished track by:
            (1) Direction of main line traffic; i.e. Outbound main line (OBT), Inbound main line (IBT), or name of auxiliary track; i.e. wye track, pocket track, etc., and
            (2) Stationing, (chainage) of both ends of the rail string and,
            (3) Right or left rail as determined by facing increasing stationing.
         c) Indicate in the Schedule which strings or which portions of strings will be head hardened. If any strings are to be cut in the field, indicate in the Schedule the locations of the proposed cuts.
         d) Design the lengths of CWR running rail strings to minimize the number of thermite field welds required.
         e) Prior to fabricating each string, record the date rolled including rail mill, weight, section, process, heat number, rail letter and ingot number for each rail stick.

2) Procedures for unloading and stacking materials.
3) Procedure for positioning CWR strings in track, setting rail gaps between strings for closure welds and initial fastening.
4) Procedure for lining, gauging and profiling of rails.
5) Procedure for joining CWR strings, including method of obtaining correct gap if joined at a different temperature than at which it was laid.
6) Procedure for destressing/anchoring CWR strings to zero thermal stress temperature, including control of rail movement, the type of equipment used to cool or heat the rail and installing rail clips for fastening of rail to plates or D.F. fasteners including data on mechanical vibrators for relieving internal rail stresses before anchoring.
7) Details of rail grinding equipment and methods of operation. Rail grinder shall be a machine with no fewer than four grinding stones per rail. The grinding wheels shall not be less than 10 inches in diameter and shall have controlled downward pressure to permit grinding more metal per pass at high spots and bridging at low spots less than 10 inches in length.
8) Procedures and equipment for bringing bolts to specified torque, and for calibration of the torque wrench by an independent testing laboratory.
9) Procedures on field welding CWR strings together including welding certificates for all personnel that will perform the welding on the project.
10) Special procedure for closing last string with previously anchored rail or special trackwork.

B. LEED Submittals:

1. Product Certificates for Credit MR 5.1[**and Credit MR 5.2**]: For products and materials required to comply with requirements for regional materials, certificates indicating location of material manufacturer and point of extraction, harvest, or recovery for each raw material. Include statement indicating distance to Project, cost for each regional material, and fraction by weight that is considered regional.

1.06 QUALITY ASSURANCE

A. The Contractor shall make the following submittals and tests before constructing direct fixation track.

B. Submit a Preliminary Work Plan for approval containing the information specified.

1. Perform grouting material tests.
2. Perform grout pad qualification tests.
3. Perform anchoring material tests.
4. Upon approval of the work plan, DFTC shall proceed using the material, methods and procedures stated in the plan.
5. Quality control tests in the plan shall be performed in the manner and to the intervals specified and the results furnished to the Engineer within 14 days after performing each test.
6. No track construction shall commence prior to approval of the final work plan.

C. Testing of Grouting Materials

1. Test specified shall be conducted on specimens of the proposed materials by an approved independent laboratory. Results of the test shall be submitted for approval.
2. Compressive Test:

a. Compressive test shall be made on three 3-inch by 6 inch cylinders in accordance with the requirements of ASTM C39.
b. To be acceptable, the average compressive strength shall not be less than 3500 psi nor more than 6000 psi at 28 days.

D. Grout Pad Qualification Testing for Retrofits.

1. The Contractor shall prepare four 1-1/4 inch thick grout pads in each of two areas of the existing trackbed designated by the Engineer. The preparation of the invert and the placement of grout pads shall be as proposed in the Contractor's work plan. Each area shall exhibit differing invert conditions.
2. The grout pads shall be allowed to cure for 28 days, after which core specimens from grout pads shall be taken of a size as required by ASTM D2936. The perimeter of any hole shall be six inches minimum from any adjacent hole and a maximum of two inches from an edge of the grout pad.
3. The specimens shall be taken at locations as directed by the Engineer. Cores shall be taken using diamond core drills and shall be oriented normal to the grout pad surface with a tolerance of plus or minus one degree.
4. The cores shall be tested in direct tension using methods specified in ASTM D2936. All cores shall be tested to failure. To be acceptable the minimum tensile strength, including the bond shall not be less than 125 psi. If failure occurs in the invert concrete at less than 125 psi an additional core shall be tested.
5. Grout pads from which cores were removed may be used for the final installation providing the cores pass the specified test and the pads are otherwise acceptable. Holes shall be filled with specified grout and the top surface shall be finished to the tolerances of the surrounding grout pad.
6. Grout pads that fail to pass the test shall be completely removed and the holes in the invert shall be patched as specified.
7. The Contractor shall perform anchor stud drilling tests on the grout pads (full depth of insert) to determine optimum insert drilling period. Hole(s) shall be drilled 24 hours, 48 hours, 72 hours, 7days, 14 days, and 28 days after pads are placed. Pads shall be placed in such a manner that insert drilling tests can be performed without affecting adjacent portions of the grout pad to be used for qualification testing. All holes to be filled full depth after test with specified grout. Test results shall be submitted for approval.

E. Fully Threaded Fastener Pull-Out Testing

1. Fully Threaded Anchor Studs shall be installed according to the work plan in each of two areas of existing concrete trackbed exhibiting different invert conditions as directed by the Engineer. The sites selected and witnessed by the Engineer will be chosen to demonstrate the temperature and wetness limits of the anchoring material.
2. A restrained test shall be performed in each area, in which a 3-1/2 inch square by 1/2 inch thick steel plate, with a 0.9687 inch diameter hole in the center shall be placed over insert on the concrete trackbed. The fully threaded anchor stud shall be installed and then have an upward vertical load applied, bearing against the steel plate, until a load of 20,000 pounds occurs. The load shall then be released. Six inserts and bolts in each area shall be tested in this manner.
3. For the unrestrained test, the steel plate shall be removed. The fully threaded anchor stud shall again have an upward vertical load applied, in such a manner that no vertical load is applied to the concrete trackbed within a radius of six inches from the insert until a load of 14,000 pounds is attained.
4. Testing shall be no additional cost to WMATA.

5. Acceptance Criteria for Fully Threaded Anchor Stud Pull-Out Testing
   a. During the restrained test there shall be no evidence of failure of the fully threaded anchoring system before a load of 20,000 pounds is attained.
   b. During unrestrained test there shall be no evidence of failure by slippage or cracking of the anchor stud anchoring material before a load of 14,000 pounds is attained.

F. Fastener Anchor Bolt Insert Pull-Out Testing

1. Inserts shall be installed according to the work plan in each of two areas of existing concrete trackbed exhibiting different invert conditions as directed by the Engineer. The sites selected and witnessed by the Engineer will be chosen to demonstrate the temperature and wetness limits of the anchoring material.
2. A restrained test shall be performed in each area, in which a 3-1/2 inch square by 1/2 inch thick steel plate, with a 0.9687 inch diameter hole in the center shall be placed over insert on the concrete trackbed. The insert bolt shall be installed and then have an upward vertical load applied, bearing against the steel plate, until a load of 40,000 pounds occurs. The load shall then be released. Six inserts and bolts in each area shall be tested in this manner.
3. For the unrestrained test, the steel plate shall be removed. The insert bolt shall again have an upward vertical load applied, in such a manner that no vertical load is applied to the concrete trackbed within a radius of six inches from the insert until a load of 6,000 pounds is attained.
4. Testing shall be no additional cost to WMATA.
5. Acceptance Criteria for Insert Pull-Out Testing
   a. During the restrained test there shall be no evidence of failure of the insert anchoring system before a load of 40,000 pounds is attained.
   b. During unrestrained test there shall be no evidence of failure by slippage or cracking of the insert anchoring material before a load of 6,000 pounds is attained.

G. Quality Control Requirements

1. The Contractor's Work Plan shall include the Contractor's quality control plan for DFTC. As a minimum, the following quality control measures shall be included:
   a. Three 3-inch by 6-inch cylinders of grout shall be taken from the production mix and cured under the same conditions as the grout pads. At the end of 28 days the cylinders shall be tested in accordance with ASTM C109.
   b. The average compressive strength shall not be less than 3, 500 psi nor more than 6,000 psi. Samples shall be taken from each 200 feet of track constructed or each day's work, whichever is less.
   c. The grout pad qualification test shall be performed on three cores each 200 feet of track or each day if less than 200 feet of grout are placed per day. The test procedure and acceptance criteria shall be the same as specified in the qualification test.
   d. The unrestrained pull-out test shall be performed on one insert on each rail every 200 feet. Should the insert or the bond fail, the Contractor shall test every insert in both directions to define, to the Engineer's satisfaction, a zone of defective inserts. All inserts in such a zone shall be made and labeled as directed by the Engineer.
   e. All materials or installation determined to be defective in accordance with the quality control program shall be removed and new materials installed and tested in accordance with the quality control program. In the event of a second failure during any retest, the Contractor shall modify his work plan to include corrective actions to be taken before any further work with the failed material is to continue. All removal and replacement shall be at no additional cost to the Authority.
2. Quality Control Requirements
   a. A quality control program for DFTC shall be submitted. As a minimum, the following quality control measures shall be included:

1) Three cylinders of concrete shall be taken from the production mix and cured under the same conditions as the plinth. At the end of 28 days the cylinders shall be tested in accordance with ASTM C39. The average compressive strength test shall not be less than 3,500 psi nor more than 6,000 psi. Samples shall be taken from each 300 feet of track constructed or each day's work, whichever is less.
2) The pull-out test shall be performed as detailed in these specifications. Should the insert or the bond fail, every insert in both directions shall be tested to define a zone of defective inserts. All inserts in such a zone shall be marked and labeled as directed.

b. All materials or installation determined to be defective in accordance with the quality control program shall be removed and new materials installed and tested in accordance with the quality control program. In the event of a second failure during any retest, the work plan shall be modified to include corrective action to be taken before any further work with the failed material is to continue.

1.07 DELIVERY, STORAGE, AND HANDLING

A. Storage and Handling Requirements:

1. Handle the inserts with care to avoid surface contamination or damage to the epoxy coating. Damaged inserts shall be replaced by the contractor or repaired using an epoxy coating procedure as recommended by the manufacturer.

1.08 WARRANTY

A. Manufacturer's Warranty: Manufacturer and Installer agree to repair or replace components of the direct fixation track that fail(s) in materials or workmanship within specified warranty period.

1. Warranty Period: <*Insert number*> year(s) from date of Substantial Completion.

B. Extended Correction Period:

PART 2 - PRODUCTS

2.01 MATERIALS

A. Grout Pads for Retrofit Construction

1. Grout shall have a design strength of 4,000 psi and shall be premeasured, prepackaged, requiring only the addition of water, and shall consist of Portland cement, fine aggregate, coarse aggregate and additives.
2. Grout shall be low-shrink, contain no expansive cement, metallic particles or air entraining agents.
3. Grout shall have been used in like application for not less than three years and perform successfully as specified under quality assurance.
4. When 8-hour curing time is required before live loads can be applied to new grout pads, it is recommended that the contractor use EUCO-SPEED MP which is a rapid-setting, rapid hardening, magnesium phosphate material.
5. When a 3-day curing time is required before live loads can be applied to new grout pads, it is recommended that the contractor use FX-32.

6. The components of grout selected shall meet the following requirements, listed below.
   a. Portland Cement: ASTM C150, Type I or II.
   b. Fine Aggregates: ASTM C33.
   c. Coarse Aggregates: ASTM C33, 3/8 - inch maximum.
   d. Water: Potable
      1) Additives: As recommended by manufacturer and approved
      2) Curing compound: Conforming to AASHTO M148, Type I-D and as recommended by grout manufacturer.

B. Anchoring Material

1. FX-830 Anchoring Set as manufactured by Fox Industries Engineering Products or equal shall be used when setting fully threaded anchor studs during retrofits, which is a three component, flowable, fast setting, 100% reactive polyester grout.

C. Fastener Anchorage Assembly

1. Fully Threaded Anchor Studs for Retrofits
   a. Fully threaded anchor studs shall be 7/8 - inch diameter and 11 inches long for retrofitting direct fixation trackwork anchor installations and shall conform to ASTM A449 except that chemical requirements shall conform to ASTM A325 for Type 3 bolts, with the chromium, nickel, and copper elements in such combination to achieve maximum corrosion resistance consonant with strength and hardness requirement.
   b. Hot dibbed galvanize per ASTM A449, ASTM A153/A153A
   c. They shall be furnished with ASTM A325 nuts, DH Grade and Finish.
   d. In addition, nuts shall be a type which provides a positive means of preventing loosening due to in-service vibrations, conforming to Industrial Fastener Institute Standards IFI - 100 and IFI - 101.
   e. Studs shall resist a nut removal torque of 250 foot - pounds minimum.

2. Anchor Bolt Insert:
   a. Steel conforming to mechanical requirements of ASTM A449 and chemical composition of ASTM A325, Type 3, or equal, with chromium, nickel and copper in such combination to achieve maximum corrosion resistance consistent with strength and hardness requirements.
      1) Threaded to 1-1/2 inch depth to receive ASTM A325 7/8-inch bolt.
      2) Designed and tested to meet 40,000 - pound bolt load without yielding.
      3) Washer face bearing against fastener equal to bearing area of A325 heavy hex nut for 7/8-inch bolt.
      4) Length and anchorage configuration designed and tested to withstand 12,000 pounds unrestrained pull-out and 250 foot -pounds torque without yielding and with four to five inches embedment in concrete exclusive of grout pad thickness.
      5) Each insert furnished with a firmly fixed and easily removable plug or nylon or plastic material to exclude concrete or other materials from entry during transport, handling and installation. Plugs shall be capable of re-insertion and, if re-inserted, shall still exclude concrete or other materials from entry.
      6) Inserts shall be coated with an epoxy resin insulating coating, 100-percent dry powder epoxy resin, Scotch Kote Brand Protective Resin No. 206N, Minnesota Mining and Manufacturing Company; Corvel Epoxy ECB - 1363A, Polymer Corporation; or equal. The coating application shall be in accordance with the coating manufacturer's recommendations and as approved, with the following additional requirements:
         a) Remove oil, grease and other foreign matter shall be removed by solvent, caustic degreasing or by steam cleaning in accordance with SSPC Specification SP 1.
         b) Prepare surface to white metal in accordance with SSPC Specification SP 5.
         c) Preheat the inserts to a uniform temperature of not less than 325 deg. F, checking and recording temperature every hour.

d) Dip inserts into fluidized bed of proper temperature and density to provide complete and uniform coverage of surfaces except interior threads when provided.
e) Immediately oven cure at a temperature between 400 deg. F and 425 deg. F for a time which will ensure complete cure of the epoxy resin.
f) The epoxy coating shall be not thinner than 10 mils nor thicker than 20 mils when tested by a magnetic mil gauge at not less than two areas of the insert; epoxy coating having runs, sags or chips will not be acceptable. When tested in accordance with ASTM D2240, epoxy coatings shall have a hardness not less than 85 nor more than Shore D.

3. Anchor Bolt:
   a. Furnished with Standard D.F. Fasteners: ASTM A449 for Mechanical Properties; A325 Type 3 for Chemical Properties.
4. Washer:
   a. Furnished with Standard D.F. fasteners.
5. Methyl Methacrylate
   a. Silikal R41si primer by Silikal North America, Inc., FX-821 (mma) by Fox Industries, Inc., or approved equal.
6. Elastomeric (Stiff) Direct Fixation Fastener, F-20 Type, produced by L. B. Foster, or approved equal.

D. Spring Clips

1. Pandrol type e2056 – Two per tie plate
2. Pandrol “C” Clips or “J”-Clips shall be used at all standard, bonded and insulated Joint locations
3. The C-Clip requires a special toe plate and clip assembly at rail joints
4. J-Clips are simply the clips and are acceptable. There are various types of J-Clips depending on its use. Since the lip of the joint bar is higher, the J-Clip reaches up to make contact with the lip.

E. New Concrete Plinth Construction

1. Plinth and Contact Rail Insulator Pedestal Concrete:
   a. Concrete shall be Mix Class SG-1 in accordance with Specification Section 03 30 00, Cast-in-Place Structural Concrete, except minimum design compressive strength shall be 4500 psi.
2. Reinforcing steel shall be grade 60 as per ASTM A615 and as specified in Specification Section 03 20 00, Concrete Reinforcement. Reinforcing steel shall be epoxy coated.

PART 3 - EXECUTION

3.01 DIRECT FIXATION RAIL FASTENERS

A. Direct fixation rail fasteners shall be installed in pairs, opposite each other within a tolerance of one inch, at right angles to the centerline of track, one fastener under each running rail. Fastener shall be spaced as follows:

Fastener Spacing (Inches)		
	Average Individual Spacing (Design Spacing)	30

All tracks except those listed below.	Average of 20 consecutive fasteners(20 spaces, plus or minus three inches	30
	Maximum Individual Spacing	33
Special Track-work and Joints	Average Individual Spacing (Design Spacing)	As shown
	Maximum Individual Spacing	As shown plus 3 inches

B. The fasteners inserts shall be located 5-1/4 inches from the centerline of rail measured normal to the rail and 1-3/4 inches from the centerline of fastener measured parallel to the rail. The fastener inserts shall be symmetrically located in the upper right quadrant and lower left quadrant of the fastener as referenced along the centerline of rail.

C. A transverse, four-inch, heavy-duty cast-iron pipe, connecting Type 1 drain inlets to the main track drain is located in the concrete invert below the running rail. Where the top of the connecting pipe is less than six inches below the concrete surface at the running rail, the fastener shall be located to provide not less than three inches clearance between the fastener insert holes and the nearest surface of the pipe.

D. The fasteners are designed with a lateral adjustment feature having a range of plus or minus ½ -inch. The range of adjustment is for both construction tolerances and re-gauging, but may not include gauge widening for curves and special trackwork. The Contractor shall install fasteners in such a manner that after final gauging and aligning of the track not less than 1/2-inch of the lateral adjustment range of each fastener remains for tightening of the gauge.

3.02 GROUT PAD INSTALLATION FOR RETROFITS

A. Chipping of Concrete Trackbed

1. Trackbed surfaces where grout pads are to be installed shall be chipped to a depth of approximately 1/4-inch to expose aggregate and provide a surface suitable for grout bonding. Chipping equipment and procedures shall be approved by the Engineer.
2. The Contractor shall submit for approval computations for the actual amount of chipping required and the proposed method. No chipping shall be done without prior approval.
3. In areas chipped in excess of that required for the installation of grout pads, the Contractor shall restore the invert to its original grades by filling chipped surface with grout pad material from which the coarse aggregate has been removed, or by filling with approved patching mortar.
4. The Contractor shall, immediately upon completion of the chipping work, clean-up and remove debris and any water resulting from the chipping.

B. Grout Pads

1. Grout pads shall be installed in direct fixation track to provide an even surface for the support of the rail fastener. The pad shall be located and its surface leveled to provide the fastener full bearing support at all positions of lateral adjustment of the fasteners along the entire length of grout pad.
2. Grout pads shall be 20 inches wide, not less than nine feet nor more than 10 feet long. There shall be a minimum of six inches of the existing trackbed exposed between grout pads.

3. Grout pads shall not be constructed over construction joints. Where grout pads overlap as-built drainage troughs, the Contractor shall proceed as directed by the Engineer. For special trackwork, the grout pad shall extend no less than 1/2-inch beyond the elastomer pad and shall be configured to provide adequate trackbed drainage.
4. The grout pad thickness shall be a minimum of 3/4-inch. Contractor shall be responsible for providing grout quantities as needed to a maximum of 3 inches at no additional cost to the Authority. Additional thickness of rail grout pads on curved track shall be computed from invert dimensions shown in typical sections for superelevated track. Grout exceeding the 3-inch maximum on the high rail for superelevation purposes will also be at no additional cost to the Authority.
5. Grout pads over two inches thick shall be reinforced as shown.
   a. Except within the limits of special trackwork and unless otherwise directed by the Engineer, grout pads shall be laid to provide the running rails a 40:1 cant toward the center of the track. Cant may vary from 33:1 to 50:1. Pads within the limits of special trackwork shall provide no cant to the rail and shall be flat to plus-or-minus 0.3 degrees.
6. The difference in elevation of two adjacent grout pads on the same rail, adjusted for grade, shall not exceed 1/16 inch.

C. Grout Installation

1. Preparation
   a. The surface shall be clean, sound and free of standing water. Foreign substances and latence shall be removed to expose firmly embedded coarse aggregate.
   b. Divert running water temporarily to achieve water free area to install grout pad.
   c. If a bonding agent is used, the recommendations of the manufacturer of the bonding agent shall be submitted for approval; and once approved, strictly followed in handling, mixing, placing and curing.
2. Forms
   a. Forms shall be constructed of coated wood, metal, or equal, and anchored securely. They shall be leak proof and strong enough to retain grout in place. Provision shall be made to give the top of grout pads the specified cant.
   b. In view of the repetitive nature of the grout pad forming operation and the large number of re-uses, it is recommended that all forms be metal or at least metal framed boards.
   c. Forms shall be assembled such that the finished concrete will conform to the dimensional tolerances specified.
   d. Forms shall be arranged for easy dismantling and stripping so that the grout pad will not be damaged.
   e. Prior to placing of grout, suitable means for checking track line and profile shall be provided.
   f. Immediately before grout is placed, all forms shall be carefully inspected and reviewed by the WMATA representative to ensure that they have been erected in conformance with the shop Drawings and are thoroughly clean and free from snow, ice or other foreign materials.
   g. Forms shall not be removed within 72 hours after placement of grout.
   h. Slip forming of grout pads may be used provided the finished grout pad meets all other requirements of the specifications and drawings.
3. Mixing
   a. The components of Portland cement grout, in the approved proportion, shall be mixed thoroughly to ensure even distribution of components.
   b. Mixing shall be done as near the grouting site as possible.
   c. Water added shall be the maximum required to achieve the design water content, including the moisture entrained in the aggregate. Water is not available in the tunnels /cut and cover box structures.
   d. Water for mixing grout and all other purposes shall be provided from sources outside of the tunnels/cut and cover box structures.

e. Material temperature shall be within the approved limits set by the manufacturer. Once mixed, grout not placed within its working time shall be discarded.

4. Placing and Curing
   a. The placing of grout shall be as recommended by the grout manufacturer.
   b. The grout shall be kept wet and curing compound shall be applied as recommended by the manufacturer of the curing compound.

D. Fastener Anchor Stud Installation

1. Drilling Anchor Stud Holes
   a. The contractor shall be responsible to update the interpreted rebar layout using Ground Penetrating Radar (GPR) or other suitable methods to ensure that the new anchor stud hole locations are drilled using a rock drill to clear the existing rebar grid, if required.
   b. Anchor Studs shall be located with sufficient accuracy to ensure compliance with specified tolerances and as required by the rail fastener design.
   c. Holes shall be drilled to a depth not greater than 5-1/2 inches in the concrete trackbed below the grout pad and the diameter shall not be greater than 2-1/4 inches. Holes shall be drilled normal, plus-or-minus one degree to the plane of the rail base.
   d. The Contractors method of drilling the concrete trackbed for D.F. inserts shall not spall the concrete, delaminate the grout pads nor compromise structural integrity of the tunnel/cut and cover box structure.
   e. Spacing for transverse reinforcing bars in the concrete trackbed is as shown on the Drawings.
      1) To decrease the possibility of interference with the drilling of the insert holes, exposed vertical finder studs welded to the transverse reinforcing bars have been provided in all underground D.F. track at longitudinal intervals of 10 feet.
      2) As a further aid in locating reinforcement bars, a pacometer is available for loan from the Authority. Special care shall be taken on aerial structures to prevent damage to tensioning cables.
   f. In the event any of the following occur, the Contractor shall immediately notify the Engineer and under his direct supervision proceed as follows:
      1) If a longitudinal reinforcing bar is encountered while drilling an insert hole, drilling shall be continued until the hole has reached design depth.
      2) If a transverse reinforcing bar is encountered while drilling an insert hole before reaching the design depth, the hole shall be relocated a minimum distance of three inches or as directed by the Engineer. Whenever a hole is relocated, the original hole shall be filled with approved insert anchoring material.
      3) If the hole is drilled to a depth greater than 5-1/2 inches, it shall be filled with grout or anchor material to the design depth.
   g. Insert holes shall be free of dust and debris prior to installation of the inserts. All debris from drilling insert holes shall be removed from the work site without damage to existing facilities. The Contractor shall take measures to prevent clogging of permanent drainage facilities. Prior to completion of the Contract, the Contractor shall ensure that permanent drainage facilities are left free of foreign matter.

2. Setting Anchor Studs
   a. Anchor stud holes shall be installed in accordance with the approved procedure and shall be embedded not less than four inches in the concrete trackbed below the grout pad.
   b. Before the installation, anchor studs shall be free of rust, dirt and other deleterious substances.
   c. Anchor studs shall be set normal plus-or-minus one degree to the plane of the rail base. The insert and anchoring material surface shall be no higher than zero inches and not lower than 1/32 inch from the top plane of the grout pad.

3. Setting Fasteners

a. Fasteners shall be placed on grout pads and secured by the use of bolts. Anchoring of a string of CWR in direct fixation track shall be accomplished by installing devices furnished by the fastener manufacturer, which are for the purpose of holding the rail on the fastener. The installation of the direct fixation fastener shall be in accordance with the fastener manufacturer's recommended installation procedure.
b. Rail fasteners shall be kept clean and free of dirt, grout and other substances which could reduce the electrical-insulating characteristics of the fastener. Inserts shall be kept free of rust, dirt and other substances. The use of shims is prohibited unless specifically approved by the Engineer on a case by case basis.

E. Sealing Aerial Structure Grout Pads

1. Description: All direct fixation aerial structure grout pads shall be sealed with two coats of methyl methacrylate.

2. Surface Preparation
   a. Complete within 24 hours prior to sealing of pads.
   b. Clean existing sides of grout pads and 6 inches of invert adjacent to pads of loose materials, oils, greases, and other foreign substances.
   c. Use high pressure (minimum 500 psi) water blast to clean pad sides and surrounding perimeter of invert.
   d. Remove water and debris with compressed air from which the oil has been removed.
   e. Dry surface around pad by torch when directed by the Engineer. The pad and surrounding area shall be surface dry.

3. Application
   a. Apply to previously prepared surface.
   b. Apply only during dry weather and not sooner than 48 hours after precipitation ceases. Do not perform work when ice crystals are present in concrete voids.
   c. Apply primer with brushes on the dry clean surface. Apply primer evenly to obtain a closed, sealing film on the four sides of each pad and on a three inch perimeter of invert adjacent to the pad.
   d. Apply primer quickly and continuously, without returning to areas already primed.
   e. Apply first primer coat to sides of pads and invert in liberal quantities, especially at bond line.
   f. Apply second primer coat not sooner than 30 minutes after the first application.

4. Safety Precautions
   a. The uncured primer is flammable. Take appropriate precautions. After curing, the primer will not support combustion.
   b. The primer may present a minimal dermatological hazard to certain individuals. Persons involved in mixing and application of the primer must wear protective clothing such as, but not limited to, rubber gloves and goggles.
   c. In general, all accident prevention regulations with respect to flammable materials, presently in force, must be observed. A dry chemical ABC fire extinguisher shall be on hand while products are in use.
   d. Component B is flammable and a strong irritant. Handle with appropriate precautions. Protective gear, not limited to goggles, rubber gloves and rubber boots must be worn.
   e. Provide an eyewash facility.
   f. Smoking is prohibited on the job site.
   g. If contact with skin occurs, wash immediately with soap and water, and contact a physician. If contact with eyes occurs, immediately flush with water for 15 minutes and contact a physician.
   h. Wash contaminated clothing before reuse; discard contaminated shoes.

5. Quality Control
   a. Surface Seal Test

1) The WMATA Engineer will visually inspect the surface of the treated pads and invert with the Contractor.
2) Acceptance Criteria: No voids or cracks which could absorb water are allowed.
3) Remedial Measures: Repair pads showing insufficient treatment with additional coat (s) of methyl methacrylate.

3.03 INSTALLATION

A. Direct Fixation Track Construction:

1. Shall use resilient spring clip direct fixation fasteners, vibration attenuating direct fixation fasteners and direct fixation fasteners with slip-in Pandrol shoulders within Special Trackwork where shown.
   a. Type of fastener to be installed at a given location shall be as indicated on the contract drawings.
2. Prior to start of DFTC all under track drains and invert conduits shall be proofed with a mandrel.
   a. Following completion of DFTC all under track drains and invert conduits shall again be proofed with a mandrel to demonstrate that the Contractor's operations have not plugged the drains or conduits.
   b. Prior to the second proofing of track drains, but after all other work is complete, the underground portions of direct fixation track shall be thoroughly washed two separate times, including inbound and outbound tracks, overhead, sidewalls and invert.
      1) Washing equipment shall be capable of attaining at least 2500 psi nozzle pressure and shall be approved by the Engineer prior to start of washing.

3.04 NEW CONCRETE PLINTH INSTALLATION

A. Insert Installation:

1. Inserts shall be located with sufficient accuracy to ensure compliance with specified tolerances.
2. Inserts shall be installed such that the top of the insert is no higher than 0 inches and no lower than 3/32 inches from the surface of the concrete plinth and as shown on the Contract Documents.
   a. Inserts shall be free of rust, dirt and other deleterious substances.
   b. Inserts shall be set normal plus-or-minus one degree to the plane of the rail base.
3. Insert plugs to preclude the entrapment of any moisture, concrete, or other foreign materials shall not be removed prior to installation. Removal shall be simple by using a socket or other common device. Plugs shall be capable of reinsertion, and if reinserted, shall still exclude concrete and other materials from entry.
4. Not less than 1% of installed inserts shall be tested as specified in these specifications.
5. Inserts shall be positioned to clear all reinforcing steel.
6. Direct fixation fastener inserts shall be located to provide fastener spacing for standard direct fixation track in accordance with these specifications. Inserts shall be installed in strict conformance with the manufacturer's installation procedure as approved and provided.
7. The center of inserts shall not be located closer than six inches to the edge of a plinth and at a transverse construction joint, drainage chase, contraction joint, or expansion joint.
8. The center of contact rail anchor inserts shall not be located within four inches of the lateral edge of plinths.

9. For top-down construction, any honey combing of the concrete plinth surface shall be corrected by providing a 1/8” thick dummy pad between the bottom plate of the fastener and the top surface of the plinth for the purpose of providing sufficient space for final finishing in order to remove the honey combing condition.

B. Plinth Concrete Placement:

1. Existing concrete surfaces to receive plinth concrete for direct fixation track shall be cleaned by high pressure water cleaning, or an approved alternate method. The cleaning method shall clean and roughen the hardened concrete surface. Compressed air used for cleaning shall be oil free. Reinforcing steel including existing exposed reinforcing steel shall be clean in accordance with Section 03 20 00, Concrete Reinforcement. Existing drainage facilities shall be maintained and any necessary repairs shall be at no additional expense. Uninhibited drainage facilities shall be verified prior to conducting other operations.

2. Longitudinal and transverse epoxy coated reinforcing steel shall be placed, as shown, and shall be supported as indicated in Section 03 20 00, Concrete Reinforcement, before concrete is placed and shall be secured against displacement within plus or minus 1/4 inch. Minimum concrete cover on all reinforcing steel shall be 2 inches.

3. Concrete including mixing, placing and curing shall comply with Specification Section 03 30 00, Cast-in-Place Structural Concrete. Prior to pouring plinth concrete, inserts shall be held by templates at their required final position. Inserts shall be installed in accordance with the fastener manufacturer's installation recommendations and within the vertical and horizontal tolerances specified by the fastener manufacturer. Inserts shall be positioned to clear existing reinforcing steel; where this is not possible, existing reinforcing steel may be bent or cut to obtain clearance only with prior written consent.

4. Forms shall conform to the requirements of Section 03 10 00, Concrete Formwork, and be constructed of wood, metal, or approved equivalent, and shall be anchored securely. Forms shall be leak proof and shall retain concrete in place during the placing and curing of concrete. Blackouts in plinths for drainage, access openings, ATC equipment and cables shall be provided at locations directed by the Contractor. Care shall be taken to prevent spillage and leakage of concrete on slab structures. Spillage and leakages shall be immediately removed. The top of the track concrete shall be constructed at the specified elevation for installing track to the finished alignment as specified and as shown, and shall ensure a uniform bearing seat across the entire concrete surface for each rail fastener base. Direct fixation rail fastener bodies may be used to hold inserts in place during the placement of plinth Concrete but shall be protected from intrusion of concrete into openings in bottom, top and sides of the fastener. If final track rail or fasteners are used in forming of plinths they shall be kept clean of concrete, oil and other deleterious materials. Inserts protruding above top of concrete or recessed more than 3/32 inch below the top of the concrete surface will be rejected.· Forms shall remain in place for 24 hours or until the concrete has achieved a compressive strength of 1000 psi.

5. Prior to placement of concrete, a survey of the track insert locations will be made to assure proper alignment and elevation. Placement of concrete shall not proceed until the alignment and elevation of the track are approved. Approval will only indicate permission to place concrete and will not constitute acceptance of the finished work.

6. Following approval of alignment and geometry, concrete shall be placed. Concrete shall be placed in a manner that avoids air entrapment and voids under and around the fastener location. Concrete shall be placed so as not to embed the fastener in the plinth.

7. Concrete temperature shall be maintained between 50°F and 90° F. Concrete shall be mixed, delivered to the jobsite, and placed within 90 minutes from the time of cement introduction to the mixture.

8. The concrete shall be placed continuously between transverse joints in a manner that will prevent the undesirable effect of overworking. The concrete shall be placed by means that

result in concrete free of voids and air pockets. If the fastener bearing seats are covered during the curing of the concrete, the fastener bearing seats when exposed may show the existence of such voids. If a single void is greater than % inches across, or if the total area of voids exceeds ten percent of the fastener's bearing area, the bearing seats shall be repaired or replaced as required. Repairs shall be made by filling the void with grout acceptable to the Contractor. The cost of such repairs or replacements shall be at no additional expense.

9. If the plinth concrete is placed below the indicated elevation, direct fixation rail fastener galvanized steel full bearing shims shall be used to obtain the finished elevation. If the concrete is placed above the finished elevation the track concrete surface shall be chipped or ground, as required, to obtain the finished elevation at no additional expense.

10. The fasteners shall not be anchored until plinths and inserts have been inspected and accepted and until the concrete has attained its 28 day compressive strength, or until directed. Loads shall not be placed on the track concrete until the specified 28 day compressive strength has been obtained.

3.05 LAYING CONTINUOUS WELDED RAIL

A. Laying, anchoring and joining of CWR shall be as specified for General Track Construction with the following additional requirements:

1. Zero Thermal Stress Temperature

2. The rail in underground direct fixation track shall be installed, joined and anchored to produce zero thermal-stress in the rail at 60 deg. F plus-or-minus 10 deg. F (16 deg. C plus-or-minus 6 deg. C).
   a. Aerial, at-grade and approach slab rail shall be anchored at a temperature of 95 deg. F plus 10 deg. F or minus 10 deg. F.
   b. The temperature of opposite rails when anchored shall be within 5 deg. F (3 deg. C) of each other.

3. Lining Direct Fixation Track
   a. Rail shall be brought to final line and grade with the rail bearing centered between the rail clamps of the fastener; the rail or fastener shall then be moved laterally to obtain corrected line and gauge. The anchor bolts shall then be tightened.
   b. Anchor bolts on all direct fixation rail fasteners under a string of CWR shall be fully tensioned in accordance with the approved installation procedure before anchoring of CWR string is begun.

4. Tensioning Anchor Bolts
   a. Bolts shall be in tightening motion when the torque is measured. Torque wrenches shall be accurate within plus-or-minus 10 foot-pounds. Calibration of a torque wrench in order to translate the tension requirement into the foot-pound setting shall be determined by laboratory test in an accurate device capable of indicating actual bolt tension from each lot to be installed.
   b. Final bolt tension shall be 30,000 pounds with a tolerance of plus 10 percent and minus 20 percent.
   c. Calibration of wrenches shall be by tightening, in a device capable of indicating actual bolt tension, not less than three bolts taken from each lot to be installed.
   d. Power wrenches shall be adjusted to stall or cut out at the required tension.
   e. If manual torque wrenches are used, the torque indication corresponding to the calibrated tension shall be noted and used for the installation of the tested lot.
   f. Calibrate wrenches immediately prior to bolt tensioning operation and every six months thereafter, including two (2) Authority owned torque wrenches.

5. Joining and Anchoring CWR Strings

a. After lining the CWR in underground, aerial, at-grade or approach slab direct fixation track it shall be joined, de-stressed and anchored as specified in General Track Construction.

END OF SECTION

SECTION 34 11 12.10

SPECIAL TRACKWORK CONSTRUCTION – DIRECT FIXATION

PART 1 - GENERAL

1.01 RELATED DOCUMENTS

A. Drawings and general provisions of the Contract, including General and Supplementary Conditions and Division 01 Specification Sections, apply to this Section.

1.02 SUMMARY

A. Section Includes: The construction of direct fixation special trackwork as indicated on the Contract Drawings and as specified.

1. Grout Pad Retrofit Construction
   a. This form of direct fixation track construction will involve retrofitting an existing reinforced concrete deck with a new plated turnout by either replacing the existing turnout only or replacing the turnout and also the existing grout pad configuration with new grout pads including the coring and installation of new fully threaded anchor studs in which to attach the new plated turnout which are set into the invert with the DFF held down by nuts and washers over the bottom plate is not recommended.
2. New Concrete Plinth Construction
   a. This form of direct fixation track construction will involve a two-pour method for new DFF track construction regarding plated turnouts where the rectilinear concrete blocks or plinths are poured after the concrete deck has been constructed. To hold the plinth to the invert, rebar stirrups are cast into the invert slab. The direct fixation fasteners are cast into the plinth using anchor bolt inserts.

B. Related Requirements:

1. Section 34 11 00 - General Track Construction
2. Section 34 11 12 - Direct Fixation Track Construction
3. Section 34 11 16.10 – Electric Flash-Butt Rail Welding
4. Section 34 11 16.15 – Thermite Rail Welding
5. Section 34 11 23 - Special Trackwork
6. Section 34 11 23.23 - Running Rail
7. Section 34 11 36.13 - Direct Fixation Rail Fasteners
8. Section 34 11 93 - Track Appurtenances and Other Track Material
9. Section 34 24 19 – Contact Rail and Appurtenances

1.03 PRICE AND PAYMENT PROCEDURES

A. Measurement and Payment Procedures:

1. Measurement of work specified in this Section will be made in the following manner:

a. No separate measurement.

2. Compensation for work specified in the Section will be made in the following manner:
   a. Included in the price of work of which it is a part.

1.04 REFERENCES

A. Reference Standards:

1. Pertinent provisions of the following listed standards and publications shall apply to the Work, except as they may be modified herein, and are hereby made part of these Specifications to the extent required.
   a. American Railway Engineering and Maintenance-of-Way Association (AREMA), Manual for Railway Engineering herein referred to as AREMA Manual (latest edition).
   b. American Railway Engineering and Maintenance-of-Way Association (AREMA), Portfolio of Trackwork Plans, herein referred to as the AREMA Portfolio (latest edition).

1.05 SUBMITTALS

A. The Contractor shall develop and submit for the Engineer's approval a detailed installation plan, including sketches, of all special trackwork installation. Particular emphasis should be placed on alignment and clearances, and methods of checking each.

B. Retrofit of Existing Turnout Grout Pads

1. The method for demolishing the existing grout pads including removal of existing anchor studs.
2. The method of preparing concrete invert surfaces to obtain the specified bond between new grout pads and existing deck surface.
3. The method of locating and drilling new anchor stud holes and setting the studs to specified position and elevation when the proposed plated turnout has been shifted and the existing location of the anchor stud holes cannot be reused since they do not match the proposed anchor stud location. Include hole diameter and depth.
4. Procedures to avoid impacting the existing rebar grid within the concrete deck when drilling new anchor stud locations that do not match the existing locations, since these locations will clear the existing rebar grid.
5. Procedure for resetting new anchor studs within the existing anchor stud hole when new grout pads are constructed.
6. If required, perform an existing anchor stud survey prior to removing these studs for the purpose of re-establishing the stud location after the grout pads have been poured for the installation of new anchor studs.
7. Details of the anchor studs including shop drawings or catalog cuts and certification of chemical composition and physical characteristics to verify compliance with these specifications.
8. The details of the grout pad sizes, and procedures for forming, mixing, placing and curing.
9. The grout mix design identifying materials, proportions and additives.
10. Curing materials for grout pads.
11. For existing aerial structures:
    a. Structural Analysis Report - to ensure that all the contractor's Roadway Maintenance Vehicles that will be used on the project will apply loads to the aerial structures less than or equal to the loading permitted under WMATA's standard Rapid Transit Vehicle Design Loading or WMATA's Standard Crane Car Loading.

1) The analysis will also include loading resulting from the equipment operation at the work site.

b. The technical specifications of all the equipment as well as construction material and equipment to be transported to and from the work site shall be provided by the contractor.

C. New Concrete Plinth Construction

1. The two methods of construction that are generally used are detailed below. The Contractor may employ either method or, if appropriate, utilize both methods at different locations on the work site as approved by WMATA:
   a. Top-down construction:
      1) This method uses track gauge jigs for supporting skeleton track (rails and direct fixation rail fasteners) in proper horizontal and vertical alignment. Concrete forms and reinforcing steel are installed in the conventional manner. Concrete is then poured beneath the suspended direct fixation rail fasteners.
   b. Bottom-up construction:
      1) Concrete forms and reinforcing steel are installed in the conventional manner. Jigs are positioned to hold the embedded female anchor inserts in proper position. After concrete curing, the direct fixation rail fasteners and rails are installed.
2. The method of laying out the work including plinths, with reinforcement bars, inserts and fasteners
3. The method for setting inserts to the specific position and elevation prior to placement of concrete and maintaining them in position
4. The details of plinth sizes and procedures for forming, mixing, placing and curing
5. The plinth concrete mix design identifying materials, proportions and additives
6. Curing materials for plinths
7. Plinth concrete compressive test report
8. Anchor stud pull-out test: Comply with the requirements of Section 34 11 12 – Direct Fixation Track Construction
9. Quality control program

D. Plated Turnouts

1. Submittals shall be as specified in Section 01 33 00, Submittal Procedures. The following submittals shall be made by the Contractor:
   a. The name(s) of the suppliers and manufacturers for the special trackwork components.
   b. Shop drawings for the various types of special trackwork and supporting drawings.
   c. Installation and maintenance instructions by the manufacturer for the various trackwork components
   d. Detailed description of construction procedures required for the work specified in this Section submitted at least 30 calendar days before beginning the work. For a more detailed description of the requirements, reference Article 3.02 Preparation.
   e. Test results required for the work specified in this Section and related work specified elsewhere.
   f. Copies of AWS welder qualification certificates.
2. Shop Drawings for all Special Trackwork Construction (Direct Fixation Track) shall be transmitted in accordance with Section 01 33 00 - Submittal Procedures.
3. Qualification Statements
   a. Qualification and experience record of the proposed trackwork superintendent and track foreman (foremen) in accordance with Section 34 11 00 - General Track Construction.
   b. Qualifications, testing program, and procedures of the certified independent testing laboratory in accordance with Section 34 11 00 - General Track Construction

4. Fastener Insert Pull-Out Test Results
   a. Comply with the requirements of Section 34 11 12 – Direct Fixation Track Construction

E. LEED Submittals:

1. Product Certificates for Credit MR 5.1[**and Credit MR 5.2**]: For products and materials required to comply with requirements for regional materials, certificates indicating location of material manufacturer and point of extraction, harvest, or recovery for each raw material. Include statement indicating distance to Project, cost for each regional material, and fraction by weight that is considered regional.

1.06 QUALITY ASSURANCE AND SAFETY

A. In order to determine the acceptability of the installation, the Contractor shall make a survey of the special trackwork and provide the Engineer with a copy of the report. Deviations from the Drawings which exceed tolerances specified shall be corrected by Contractor at no additional cost to WMATA.

B. Switch points shall mate and rest under the undercut stock rail and provide a continuous contact with stock rail the length of the machined point rail face adjacent to the stock rail.

C. Switch points shall bear on all slide plates as shown by grease marks and feeler gauges in the thrown operating position.

D. Operation of switch point shall be unrestricted and allow for smooth switch machine operation with current draw to suit WMATA's standard switch machine.

E. Contractors Work Trains

1. Contractor shall not operate his work trains over special trackwork until it has been assembled and secured in place to the satisfaction of the Engineer.
2. Switch points shall be secured to the satisfaction of the Engineer before work trains or other on-track equipment are passed over turnouts.

F. WMATA, or its representatives, reserve the right to visit the producers facility during usual business hours unscheduled to:

1. Observe special trackwork assemblies and material.
2. Observe sampling and inspection procedures.
3. Obtain samples of the prepare material being produced and shipped.
4. Review plant inspection methods, quality control procedures, equipment and examine inspection test results of current and previous tests.

1.07 DELIVERY, STORAGE, AND HANDLING

A. Storage and Handling Requirements:

1. The Contractor shall handle all special trackwork materials in such a manner as to prevent damage during loading, transporting, unloading, storing and installing in accordance with current AREMA Recommended Practices.
2. Use only approved lifting devices that will not damage the materials.

PART 2 - PRODUCTS

2.01 MATERIALS

A. The Contractor shall supply the special trackwork turnouts and crossings as listed on the Contract Drawings, including all materials necessary to provide a complete installation.

B. The following materials in accordance with the bills of materials on the drawings for special trackwork and general track construction shall be furnished as described, including but not limited to:

1. Running Rail
2. Direct Fixation Rail Fasteners
3. Track Appurtenances and Other Track Material
4. Special Trackwork
5. Contact Rail, insulators, cover board and end approaches
6. Insulated Joints

C. Grout

1. Comply with the requirements of Section 34 11 12 – Direct Fixation Track Construction

D. Insert or Anchor Stud Anchoring Material

1. Comply with the requirements of Section 34 11 12 – Direct Fixation Track Construction

E. Fastener Anchorage Assembly

1. Comply with the requirements of Section 34 11 12 – Direct Fixation Track Construction

F. Other materials:

1. Switch stands, connecting rods and associated hardware as shown on the Standard Drawings.
2. Furnish a dry graphite lubricant for application to the riser plates. The lubricant shall have low electrical conducting properties.
3. Furnish switch machines, operating rods and switch machine mountings for power operated turnouts, as described in Division 34 of the Contract Specifications.
4. Furnish all additional track materials within the special trackwork limits to construct an acceptable completed special trackwork structure as specified herein.

2.02 EQUIPMENT

A. Furnish all equipment required to construct each special trackwork unit and as may otherwise be required to acceptably complete the Work.

PART 3 - EXECUTION

3.01 GENERAL

A. Construction of special trackwork on direct fixation track shall be as specified and shall comply with the applicable portions of Direct Fixation Track Construction (DFTC), Section 34 11 12.

B. Direct fixation special trackwork will be factory pre-assembled in accordance with Special Trackwork, Section 34 11 23, for WMATA inspection and approval. The special trackwork will then be packaged and shipped in accordance with the specifications.

C. Tracks through the center diamond of crossovers shown as CWR shall be high strength rail. Through main line tracks between turnouts of crossovers shown as CWR shall be standard rail.

D. Lubrication

1. At the time of installation all sliding surfaces of special trackwork assembles shall be lubricated with an approved dry-film graphite lubricant.
2. Vertical switch rod clips shall be greased in accordance with the manufacturer's recommendations.
3. The specified lubrication shall be maintained as necessary to ensure proper operation of all components throughout the duration of this Contract.

E. Switch Adjustments at Power Operated Switch Machines

1. The Contractor shall make all mechanical adjustments, including those required for train control and switch machine installation, as directed by the Engineer prior to the final acceptance of special trackwork to ensure that special trackwork units are in alignment to their plates and proper operating condition.
2. Correct out of contact, out of surface, binding and other conditions that interfere with switch throw and cause excessive loads on the switch machine.

F. Switch Machine: Switch machines and operating rods will be furnished and installed by others.

G. Switch Rods: Adjust for throw as illustrated in the contract documents.

H. Rail Ends: Rail ends to be connected to CWR will be drilled in the field.

I. Joints

1. All furnished joints required to assemble the turnout shall be installed by the Contractor. All rail joints are to be torqued as per specifications.
2. All joints, standard or insulated, connecting a turnout to other trackage shall be furnished and installed by the Contractor. This would usually be one pair of joints ahead of the point of switch and two pairs of joints beyond the frog; one pair on the through track and one pair on the turnout track.

3.02 PREPARATION

A. Work Plan: Prior to beginning the Work specified in this Section, prepare a detailed work plan describing the installation procedures required for the Work, including but not limited to the following:

1. Survey procedures for establishing and marking the location of special trackwork, grout pad sizes and layout, anchoring pattern for threaded reinforcing bar in the deck.
2. Design and pattern the reinforcing bar system in special trackwork plinths or grout pads considering fastener positions, sizes, and embedded anchor bolt insert locations. Reinforcing bar locations within the plinth shall be clear of all drillings for anchor bolt insert locations.
3. Grout pad designs shall be coordinated with the train control system installation contractor to accommodate his conduits and cables without resorting to concrete chipping or other expedient measures that might compromise the integrity of the track installation. Provide

accommodations for electrical conduits and their supporting systems so that subsequent conduit installations do not block bridge deck drainage paths.

4. Design and pattern of formwork installation with elevation and grade setting of screed heights for grout pads.
5. Method to score, roughen, air blast, or other effective means to remove all loose laitance and debris from the structure deck surface within the grout pad areas for bonding of plinths.
6. Method of determining positions of embedded anchor inserts in the structure deck.
7. Installation of reinforcing bar system according to the approved work plan layout.
8. Installation of formwork according to the approved work plan layout.
9. Preparation of formwork surface with bond breaker without coating reinforcing bars.
10. Place concrete and screed and trowel to proper height and grade and finish with a smooth hand trowel consistently level non textured surface.
11. Confirm flatness and level conditions of top of plinth or grout pad and finish grind imperfections to create a 90-percent contact between the base of fastener and top of plinth in the fully installed position; fill surface voids with cementations grout.
12. Positioning of special trackwork on the cured, stripped, and approved concrete plinths for the final position.
13. Method to mark anchor bolt locations for grout pad drilling according to specific direct fixation fastener and anchor bolt location.
14. Method of drilling the special trackwork grout pads for the installation of embedded anchor inserts with epoxy grouts.
15. Complete details of placing and fastening special trackwork, including proposed methods and equipment, and a detailed procedure for achieving uniform longitudinal rail stress at the zero stress temperature as specified in Section 34 11 00 - General Track Construction.
16. Specific preparation and installation procedures for undertaking thermite welds according to Section 34 11 16.15 – Thermite Rail Welding.
17. Details and shop drawings pertaining to the components to be used, methods, templates, fixtures, and temporary clips.
18. List of transporting and working equipment required for the Work.
19. For retrofits, procedures to avoid impacting the existing rebar grid within the concrete deck when drilling new anchor stud locations that do not match the existing locations, since these existing locations will clear the existing rebar grid.

3.03 CHIPPING

A. Chipping of the concrete trackbed shall be as specified Section 34 11 12 – Direct Fixation Track Construction.

3.04 CONFIGURATION AND PLACEMENT OF GROUT PADS (RETROFITS)

A. Grout pads shall be cast in place and shall conform to the requirements shown and specified in Section 34 11 12 - Direct Fixation Track Construction.

B. Grout pads shall be placed prior to installation of special trackwork.

C. Grout pad layout shall be the responsibility of the contractor in accordance with the following requirements.

1. The grout pad shall extend not less than 5 inches beyond the edge of fasteners except where lesser space is required to provide clearance for switch rods, detectors rods, and other switch machine connecting rods.
2. The layout of grout pads and the gaps/chases between grout pads shall be configured to ensure continuity of structure deck drainage. Short runs of half-round pipe to carry stormwater runoff beneath plinths in difficult locations are acceptable if shown on accepted shop drawings. Fastener support tolerances shall be maintained.
3. Coordinate with the train control system installer for locations where their electrical conduits or cable may require additional chases between plinths. Make certain that installation of conduits and cables will neither block intended drainage paths nor present barriers where wind-blown debris can accumulate, causing subsequent blockage of drainage.
4. The surface of the grout pads shall be configured to prevent ponding or trapping of water around rail fasteners.

3.05 CONCRETE PLINTHS (NEW CONSTRUCTION)

A. Concrete plinths shall be cast in place and shall conform to the requirements shown and specified in Section 34 11 12 - Direct Fixation Track Construction.

B. Concrete plinths shall be poured after the installation of special trackwork using top-down construction.

C. Any honey combing of the concrete plinth surface shall be corrected by providing a 1/8” thick dummy pad between the bottom plate of the fastener and the top surface of the plinth for the purpose of providing sufficient space for final finishing in order to remove the honey combing condition.

D. Concrete plinths layout shall be the responsibility of the contractor in accordance with the requirements as indicated under Article 3.04.C

3.06 DRILLING ANCHOR HOLES

A. Anchor stud or insert holes for special plate anchorage assemblies shall be drilled at the locations shown within a tolerance of plus or minus 1/16 inch.

B. Anchor stud or insert holes for direct fixation rail fasteners within special trackwork units and holes for special plate anchorage assemblies shall be as specified in Section 34 11 12 – Direct Fixation Track Construction as follows.

1. Special plate anchorage assembly holes shall be drilled 4-1/2 to 5-1/2 inches deep, 1-1/8 to 1-3/4 inches in diameter, and normal to the concrete surface plus or minus one degree.
2. The base plate may be used as a guide for drilling anchor bolt holes.
3. All debris shall be removed.

3.07 SETTING ANCHOR ASSEMBLY AND FASTENERS

A. The Anchor Assembly for special plates shall be specified in Section 34 11 93 - Track Appurtenances and Other Track Material, and as shown.

1. They shall be set normal to the concrete surface plus or minus one degree and shall be installed using the bolt anchoring material and procedures as specified, tested and approved Section 34 11 12 – Direct Fixation Track Construction.

B. Turnout Retrofit or New Concrete Plinth Construction: Once the epoxy grout has attained its initial set, release the installation fasteners from the fastener by removing the threaded rail clip holders regarding top-down construction.

1. Remove the temporary threaded clips from the standard fasteners so the anchor insert or anchor stud setting is not disturbed.
2. Do not use force to remove the clips.
3. The intent of removing the installation before final epoxy grout cure is to relieve stress in the grout caused by thermal expansion and contraction in either the special trackwork rail or epoxy grout or in both, which could lead to grout cracks originating at the anchor insert locations.
4. Connect the rail and fasteners only after the epoxy grout has attained 100 percent of its strength.
   a. To either achieve uniform bearing or for correction of vertical grout pad height, do not grind the concrete lower than the top of the anchor insert collar.
   b. Thoroughly blow stone dust and extraneous materials off the surface of each concrete grout pad to prevent damage to the fastener elastomer base pad.
5. Install elevation correction shims between the direct fixation fasteners and the grout pads to ensure proper top of rail profile line and grade.
   a. Accurate installation of direct fixation special trackwork concrete plinths to elevation and grade should produce a minimum or zero corrective track shim requirement under each fastener.
6. Place fasteners in the designated fastener seat area.
7. Install the single rail standard direct fixation rail fasteners in the closure areas in the middle of an adjustment zone so that after final aligning and gauging of the special trackwork, the fasteners can be adjusted a minimum of 3/8 inch towards the gauge side of rail to compensate for future gauge face rail wear.
8. For future maintenance, the final position of the rail on the fastener must preserve the full specified lateral allowance for the rail adjustment.

3.08 SECURING SPECIAL PLATES

A. During installation of special plates, anchor bolts shall be fitted with protective sleeves to prevent thread damage**.** Anchorages for special plates shall be assembled as shown on the standard drawings.

B. After the grout pads and anchoring material have attained sufficient strength as determined by the Engineer, anchor bolts shall be tightened until the spring washer coils have a gap of 0.075 inch, plus or minus 0.005 inch. The tightening shall be verified to the satisfaction of the Engineer by the use of a feeler gauge.

C. Rail clamp bolts shall be torqued to 21,000 pounds tension. The Contractor shall furnish and calibrate torque wrenches and feeler gauges to check the torque of anchor bolts and rail clamp bolts. Torque wrenches shall be accurate within plus or minus 10 foot-pounds. The feeler gauges and the calibration of torque wrenches shall be subject to approval.

D. Frog guard rail plates shall be field-welded to frog plates by an AWS qualified welder.

3.09 DIRECT FIXATION RAIL FASTENERS

A. Direct fixation rail fasteners of the type shown (standard or stiff) shall be installed in special trackwork at all support locations where special plates are not shown. The installation shall comply with the requirements Section 34 11 12 – Direct Fixation Track Construction.

3.10 DIRECT FIXATION SPECIAL TRACKWORK INSTALLATION

A. Locate special trackwork units using stationing, coordinates and alignment of key geometric points as indicated in the Design Plans. Use tangent offsets indicated on the Design Plans and special trackwork fabricator's drawings to establish line for turnout rails.

B. Clean concrete and direct fixation fasteners prior to installing shims and fasteners to ensure full bearing of the fasteners on the concrete plinth surface. Install special trackwork fasteners as indicated within the limits of special trackwork.

C. Torque anchor bolt and special trackwork bolts to manufacturer's specified tension. Exercise care to prevent over torqueing of bolts.

D. Assemble the special trackwork unit using thermite welded rail joints within the special trackwork as indicated on the standard drawings and special trackwork fabricator's shop assembly drawings.

3.11 FIELD WELDING

A. Join special trackwork rails together by the thermite field welding process as indicated on the Design Plans.

B. Perform thermite field rail welding in accordance with Section 34 11 16.15 - Thermite Rail Welding.

3.12 BONDED INSULATED RAIL JOINTS

A. Locate, install, and test insulated rail joints as shown on the Design Plans, the special trackwork fabricator's layout drawings, and conform to the requirements of Section 34 11 93, Track Appurtenances and Other Track Material.

B. Depending on location, insulated joints may be either plug rails furnished preassembled by the special trackwork fabricator or field-assembled bonded insulated joints.

3.13 TOLERANCES

A. Tolerances shall conform to the AREMA Portfolio and Manual, unless modified by these specifications and drawings.

B. The final gauge, cross level, superelevation, horizontal alignment and vertical alignment of direct fixation special trackwork shall be as specified for direst fixation track construction.

C. Tolerances shall be as specified for direct fixation track construction.

D. Switch points in normal position shall be square within 5/8 inch.

END OF SECTION

SECTION 34 11 23

SPECIAL TRACKWORK

PART 1 - GENERAL

1.01 RELATED DOCUMENTS

A. Standard Drawings and General Provisions of the Contract, including General and Supplementary Conditions and Division 01 Specification Sections, apply to this Section.

1.02 SUMMARY

A. Section Includes: The manufacture, fabrication, shop assembly, inspection, testing, packaging and shipping special trackwork materials including the following:

1. Components for installations in both ballasted and direct fixation track
2. Fabricating and furnishing guarded turnouts as shown and specified

B. Related Requirements:

1. Section 34 11 00 - General Track Construction
2. Section 34 11 11 - Ballasted Track Construction (BTC)
3. Section 34 11 12 - Direct Fixation Track Construction (DFTC)
4. Section 34 11 11.10 - Special Trackwork Construction – Ballasted (Wood Ties)
5. Section 34 11 12.10 - Special Trackwork Construction - Direct Fixation
6. Section 34 11 23.23 - Running Rail
7. Section 34 11 36.13 - Direct Fixation Rail Fasteners
8. Section 34 11 93 - Track Appurtenances and Other Track Material
9. Section 34 11 33.16 - Timber Track Cross Ties
10. Section 34 11 33.15 – Concrete Switch Ties

1.03 PRICE AND PAYMENT PROCEDURES

A. Measurement and Payment Procedures:

1. Measurement of work specified in this Section will be made in the following manner:
   a. No separate measurement
2. Compensation for work specified in this Section will be made in the following manner:
   a. Included in the price of the work of which it is a part

1.04 REFERENCES

A. Abbreviations and Acronyms:

1. ASTM – American Society of Testing and Materials

2. ACIL – American Council of Independent Laboratories
3. IFI – Industrial Fasteners Institute

B. Reference Standards:

1. WMATA Standard Drawings
2. AREMA Communication & Signals Manual of Recommended Practices (latest edition)
3. AREMA Manual of Recommended Practice – Signals
4. ACIL Manual of Practice
5. American Railway Engineering and Maintenance-of-Way Association (AREMA), Manual for Railway Engineering herein referred to as AREMA Manual (latest edition).
6. American Railway Engineering and Maintenance-of-Way Association (AREMA), Portfolio of Trackwork Plans, herein referred to as the AREMA Portfolio (latest edition).
7. ASTM A36/A36M – Standard Specification for Carbon Structural Steel
8. ASTM A325 – Standard Specification for Structural Bolts, Steel, Heat Treated, 120/105 ksi Minimum Tensile Strength
9. ASTM A490 – Standard Specification for High-Strength Steel Bolts, Classes 10.9 and 10.9.3, for Structural Steel Joints (Metric)
10. ASTM A536 – Standard Specification for Ductile Iron Castings
11. ASTM A563 – Standard Specification for Carbon and Alloy Steel Nuts
12. ASTM D395 – Standard Test Methods for Rubber Property-Compression Set
13. ASTM D412 – Standard Test Methods for Vulcanized Rubber and Thermoplastic Elastomers-Tension
14. ASTM D471 – Standard Test Method for Rubber Property-Effect of Liquids
15. ASTM D573 – Standard Test Method for Rubber-Deterioration in an Air Oven
16. ASTM D1149 – Standard Test Methods for Rubber Deterioration-Cracking in an Ozone Controlled Environment
17. ASTM D1229 – Standard Test Method for Rubber Property-Compression Set at Low Temperatures
18. ASTM D2240 – Standard Test Method for Rubber Property–Durometer Hardness
19. ASTM E10 – Standard Test Method for Brinell Hardness of Metallic Materials
20. ASTM E329 Rev A – Standard Specification for Agencies Engaged in Construction Inspection, Testing, or Special Inspection
21. ASTM F436 – Standard Specification for Hardened Steel Washers
22. AWS D.1.1 Structural Steel Welding Code
23. IFI – Industrial Fastener Institute

1.05 SUBMITTALS

A. Product Data:

1. Certification of the procedure used in the depth hardening of frog castings.
2. Radiographic testing of each frog for compliance of internal soundness of casting, according AREMA specification M2.5.

3. Test data for the rail used in all fabrication for compliance with AREMA and these specifications.

4. Refer to Section 01 32 20, Certificates and Reports, and submit the following:
   a. Certificates of material compliance required by AREMA and this Specification.
   b. Test reports of chemical analyses, Brinell hardness, electrical insulation, and other tests required by AREMA and this Specification.
   c. Frog depth hardening results

B. Shop Drawings:

1. Detailed shop drawings for special trackwork components, including the following:
   a. Insulated curved split switches, including stock rails.
   b. Insulated switch rods, including clip assemblies.
   c. All insulation materials, parts and assemblies.
   d. Closure rails, turnout rails and connecting rails as provided in the contract documents.
   e. Frog and frog guard rails.
   f. All special plates, including details of components.
   g. Switch panel details.
   h. Rail braces and housing chairs.
   i. Direct fixation rail fasteners, including details of components.
   j. Complete layouts and details for all types of turnouts, single crossovers, double crossovers, and crossing diamonds:
      1) Provide shop drawing layouts with sufficient detail to give the installation contractor sufficient information to assemble the special trackwork unit using the information available on the shop drawings and the centerline stakeout without requiring additional surveying or calculations.
         a) On ladder track and fan layouts, provide sufficient rail length and switch tie detail for each turnout to show precise connecting rail lengths between adjacent turnouts and precise tie arrangements eliminating standard switch ties within the turnout tie set, as required.
         b) Provide a list of turnout switch ties (wood or concrete) for each individual turnout.
         c) Show the location and orientation of all fastenings and other small parts, and number key them to the shop drawings.
         d) When actual layout dimensions, as measured during shop assembly, differ from the design values, and these values are accepted by WMATA, show these as-built dimensions on the revised final shop drawings shipped with the material. Deviations not accepted by WMATA shall be corrected.
      2) Provide fabrication detail plans with sufficient detail so that WMATA will be able to have non-proprietary items duplicated by another trackwork fabricator without requiring additional design or calculations.
   k. Installation drawings for each type of assembly used during construction.

C. Testing laboratory, testing equipment, test program plan, test procedures and test reports for the direct fixation rail fasteners, including the following resting laboratory information for review by the Authority prior to testing:

1. Name and address of the laboratory

2. A description of the facilities and testing equipment that will be assigned for this testing.

3. Names, experience, and qualifications of the personnel that have laboratory experience in performing this testing.

4. For the testing of the direct fixation rail fasteners, a list of the laboratory's experience in testing this type of rail fasteners or fastener - like assemblies

D. A certified copy of reports on the analyses and tests required by referenced ASTM specifications.

E. Contractor's method for locating all special plates, not in the switch panel, which span two or more ties, drilling the ties and holding the plates in place during shop assembly and inspection.

F. Configuration and method of fabrication for switches.

G. Check list or measurement report for all switches and frogs approved by the Engineer. This shall show the design size and allowable tolerance required by AREMA, or as shown and specified in these contract documents, as well as the actual size.

H. Detailed description of the procedure for bonded insert and bonded joint installation approved by the Engineer.

I. Submit methods of unloading and stacking materials (consider storage site space is limited) 30 days before the scheduled date of the first delivery.

J. Submit written description indicating how each special trackwork unit will be broken down for shipment, and the packaging of each special trackwork loose item required for assembly into the complete item.

1.06 EXTRA MATERIALS

A. Furnish extra materials, from the same product run, that match products installed and that are packaged with protective covering for storage and identified with labels describing contents.

1. Provide double the amount of the following specified extra material**:**
   a. Manganese Housetops,
   b. Heel Blocks,
   c. and the corresponding bolts.

1.07 QUALITY ASSURANCE

A. Quality Assurance Program - Refer to Section 34 11 00, General Track Construction, and conform to the requirements of the Quality Assurance Program.

B. Quality Assurance Program must be submitted to WMATA and must be consistent with ISO 9001.

C. Tolerances: Conform to the AREMA Portfolio - Plan No. 1021-03, Permissible Variations in Completed RBM Steel Frogs **(See Attachment B)**; Plan No. 1020-03, Permissible Variations in Completed Switch Points **(See Attachment B)**; the AREMA Manual, Chapter 5, in all aspects unless modified by the contract documents.

D. Except as modified in the contract documents, design, manufacture, test, assemble, inspect, ship, unload and stack special trackwork in accordance with the AREMA Portfolio and the AREMA Manual for Railway Engineering (Latest Edition). After approval by the WMATA Engineer, match mark all components and package as specified.

E. Contractor's checklist/measurement report shall be provided for the Manufacturer's laydown inspection. The checklist shall be completed and submitted to the WMATA Engineer for approval prior to shipping any special trackwork.

F. Except as modified in the contract drawings, use rail in the special trackwork conforming to the requirements of the AREMA Manual, Chapter 4, regarding Head Hardened Steel (Latest Edition).

G. WMATA, or its representatives, reserve the right to visit the producers facility during usual business hours unscheduled to

1. Observe sampling and testing procedures,

2. Obtain samples of the prepare material being produced and shipped, and

3. Review plant inspection methods, quality control procedures, equipment and examine test results of current and previous tests.

1.08 QUALITY CONTROL

A. Notify WMATA in writing not less than 14 days in advance of dates scheduled for any test. WMATA retains the right to witness testing. Do not conduct test until authorized by WMATA.

B. Testing Laboratory:

1. Perform qualification and production quality control tests using either an independent testing laboratory or a qualified manufacturer's laboratory reviewed by WMATA. If an independent testing laboratory is selected, it shall be a member of the American Council of Independent Laboratories. If a manufacturer's laboratory is selected, it shall satisfy the requirements of the American Council of Independent Laboratories Manual of Practice - Quality Control System - Requirements for A Testing and Inspection Laboratory, and ASTM E329.

2. The selected laboratory shall use the proper equipment and qualified personnel for testing such as described in this Section.

C. Testing Equipment: Provide equipment in good operating condition, of adequate capacity and range, and accurately calibrated. Use testing equipment that is in calibration with standards which are certified and traceable to the National Bureau of Standards within one year immediately preceding the test date. Submit copies of calibration certificates with test reports.

D. Documentation: In conjunction with the specified tests, submit the following documents for review:

1. Test program plan: In this plan, identify Contractor's approach for accomplishing each of the specified qualification and production quality control tests. Include the projected schedule for test procedure submittals, test executions, and test results report submittals.

2. Test procedures for each test, describing the objective, equipment, and instrumentation that will be used, procedure to be implemented, and the anticipated results. Include working drawings detailing test equipment and set-up of direct fixation rail fastener that will be tested.

3. Test report:
   a. A separate report of test results for each test which includes original data calculations, test procedure references, test equipment identification, test personnel, date of test, specified requirements, actual test results, nonconformance if any, and interpretation of the results. Highlight conformance or deviation in a report summary.
   b. Accompany the written test reports with a photographic record of the tests. Include photographs of sufficient clarity to distinguish relevant details as described or referenced in the respective written report.

E. Production Quality Control Test of Insulation Pieces:

1. Test insulated gauge plates and switch rods in accordance with AREMA Communication and Signal Manual, (Latest Edition).

F. Shop Assembly

1. Completely assemble, prior to shipment, the turnouts, crossing diamonds, and crossovers in Contractor's fabrication shop for inspection by the Contractor's Quality Control (QC) Staff. For mainline turnouts and crossovers, assemble on the specified switch ties and/or the direct fixation fasteners which will be incorporated into the Work.

2. Fully bolt and assemble rail joints for all turnouts. For inspection, use temporary joint bars with "C" clamps for shop assembly. Install 1/4 inch end post shim where insulated joint bars are indicated. Do not apply adhesive during this process.

3. Include all switch ties, crossing ties, rail fastenings and insulators in the assembly to completely replicate the special trackwork, as it will be assembled in the field.
   a. Use all of the actual rails that will be employed in the field to perform the shop assembly.
   b. Provide an accurate survey reference line that duplicates the track geometrics and which has been laid out with a transit and tape or other accurate surveying methods.
   c. Demonstrate that the rails accurately follow the design alignment within indicated tolerances.
   d. Verify dimensions during shop assembly.
   e. No bracing, spiking to the floor, or use of other similar methods to hold the track in final alignment will be permitted during shop assembly. Demonstrate that shop curved rail pieces have been curved to correct radius and do not need to be forced into alignment by the rail fastenings of the concrete switch ties.
   f. Distribute, space, and align turnout ties normal to the centerline of track at the spacing indicated on accepted shop drawings and with tie ends on the line side of the track equidistant from rail.
   g. Fully assemble each switch with switch machine of the turnouts to confirm proper throw with switch point/stock rail mating, proper switch point stop height, proper heel block assembly and heel of switch spread.
   h. Permanently place rail fastenings on ties within limits of special trackwork, and assemble turnout frogs, guard rails, closure rails, and switch rails.
      1) Lay and anchor rail in accordance with indicated requirements and accepted shop drawings.
      2) At locations where field welds and field-installed insulated rail joints occur, provide temporary joint bars to bolt the rails together during shop assembly. Use spacers to establish the joint gap required for welding or end post.
      3) Elastic spring clips used during shop assembly shall not be the same clips shipped with the layout. Clips shipped with the layout shall be new. The fabricator may use either new or fit reclaimed clips during shop assembly at his discretion.
   i. Verify proper track gauges and flangeway dimensions.
   j. No bracing, wedging, or support blocking will be permitted to hold components to proper gauge and alignment.

4. Variations from WMATA reviewed shop drawings or other contract documents will constitute noncompliance and will not be accepted for shipment unless or until proper modification are made and reviewed by WMATA.

5. Shop Assembly Inspections
   a. Manufacturer and Contractor's Inspection:
      1) Primary responsibility for inspection of the shop assembled special trackwork resides with the various contractors.
      2) Verify the fit and finish of all components.
      3) Note deviations from Contract requirements, make corrections, and re-inspect as required to confirm that corrections have been acceptably completed.
      4) Include the operation of the fully installed switch machine in the inspection of all turnout switches to confirm function and proper position of switch points in relation to the stock rail, switch point stops, fixed or floating heel block, and switch throw.
      5) Check switches in both thrown switch positions for conformance with the switch geometry. Check for proper switch point mating to stock rails. Minimum shall be a 70-percent contact between switch point machined surface and stock rail. Check using feeler gages to 0.000-inch precision to delineate gaps. Maximum allowable gap at any location shall be 1/16 inch.
      6) With no pressure acting on the switch rail, the maximum allowable spring back between the switch point and the ball of the stock rail shall be 3/16 inch, measure six inches back from the tip of the point.
      7) With minimal bar pressure acting on the switch rail at rod number 1, 25% or more of the switch point contact length, starting from the tip of the point, shall make positive, firm contact with the ball of the stock rail.
   b. WMATA Inspections:

1) WMATA will inspect the shop assembled special trackwork and all components prior to shipment.
2) Make available to WMATA, without charge, the facilities and assistance to examine the work during its progress, and when the product is finished, to satisfy WMATA that the finished product will comply with the contract documents. Provide templates and one yard straight edge or longer, as necessary, to check flangeways, rail end drilling, switch rail planing, and other features of the Work usually checked by templates.
3) Notify WMATA of the date(s) when shop assembly will be completed a minimum of 14 days in advance of the date(s).
4) Reconfirm that the assembly will actually be complete and ready for inspection no later than 48 hours prior to the promised date and time for the commencement of inspection.
5) Costs associated with delays in inspection dates, such as financial penalties for changing flights of WMATA personnel, will be at the Contractor's expense.
6) Special trackwork layouts shall have been completely inspected by the Manufacturer's and Contractor's quality control representatives and all corrective actions taken prior to the arrival of the WMATA inspector. Provide the WMATA inspector with a copy of inspection reports, deviations noted, and re-inspection reports.
7) Present material for inspection in a safe, dry, and protected from the weather-covered area away from manufacturing activities and noise in excess of 75 dBA.
8) Without additional charge to WMATA, provide all necessary facilities, tools, lighting, copies of shop drawings and other assistance required for WMATA to conduct an inspection to whatever level WMATA deems appropriate at that time.
   a) Provide labor and equipment required to facilitate inspection of the top, sides, and bottom of all materials, and to disassemble components as may be required to inspect concealed surfaces.
   b) Provide templates to check flangeways, rail end drilling, and switch rail planing.
   c) Design the templates for quick and easy use and requiring only one person for the operation.
9) Provide a minimum of 8 hours during normal daylight working hours for WMATA to inspect each completely assembled layout before disassembly for shipment is scheduled to commence.
10) Do not commence disassembly before WMATA has provided conditional acceptance of the material and released it for shipment.
11) WMATA's inspection personnel have the authority to reject materials, work in progress, or finished work that fails to meet the requirements or these Specifications.
12) WMATA inspection personnel have the authority to require corrective work.
13) Development of the details of how corrective work will be accomplished is the responsibility of the Contractor, but WMATA's inspection personnel have the authority to accept or reject the proposed corrective methods.
14) Notwithstanding the results of shop inspections, final acceptance of special trackwork procurement products will not occur until after they have been delivered, unloaded, and stacked, and are then found to be in acceptable condition.

6. For inspection and review, match mark rails in appropriate colors, and sequentially number fasteners or switch ties, in accordance with WMATA reviewed System. Submit the match marking and numbering system on the Contracting Drawings for the Contractor's QC Staff before match marking and numbering commences.

7. Provide the record of the Contractor's completed turnout inspection checklist to WMATA.

1.09 DELIVERY, STORAGE, AND HANDLING

A. Delivery and Acceptance Requirements:

1. Load, unload, handle, and store special trackwork components by accepted methods to prevent kinking, bending, nicking, or otherwise damaging the parts.

2. In unloading operations, do not drop special trackwork components but place each length of rail with the head up and with sufficient support under the base.
3. Do not subject individual components and rail bundles to excessive static loading.
4. Avoid sudden impact or dynamic loading, and prevent high stressing arising from point or line loading.
5. Load, deliver, unload, and place special trackwork in WMATA material storage yard. Place all materials for each turnout or crossover, including switch ties, together and segregated from other special trackwork layouts

B. Storage and Handling Requirements:

1. During special trackwork component handling operations using cranes, support each component or bundle of rails at two or more slinging points along the length of the part.
   a. Spanner beam is a requirement.
   b. Single point slinging of parts is prohibited.
   c. Avoid excess cantilevering of the component end beyond the slinging points in order to prevent permanent bending and excessive stressing of the part.
   d. Locate slinging points at uniform distances along the load so that components are in a horizontal position at all times.
   e. Use only slings that do not cause surface damage or notching.
      1) Terylene or nylon strapping is required, with an additional sleeve where the sling is in contact with the rail or component.
      2) Flat profile chain link slings having a protective sleeve are also required
   f. Do not use chains and wires that may cause surface damage.
2. Use sufficient timber dunnage at all times, and take particular care when extracting slings from around component lifts in order to ensure they are not "ripped out."
3. Place each complete special trackwork layout, including its concrete or wood switch ties and other components, into storage sorted by each individual segment and identity mark.

C. Packaging and Waste Management:

1. Once a fully assembled special trackwork item has been inspected and accepted for shipment in accordance with this Section, dismantle it only to the level necessary to permit shipment of the item.
   a. Ship shop curved turnout rails in preassembled sections together to the maximum degree feasible for transportation. Do not mix rails from one turnout with those of another.
   b. Retain all tie plates affixed to the ties for shipping and final installation.
2. Crate each turnout's items separately for shipment as indicated on accepted working drawings, and ship them with other parts of the same assembly.
   a. Securely crate, or palletize loose items such as new elastic/spring rail clips, insulators, rail pads, braces, and other similar items; and identify them by individual turnout crossover or double crossover, and then ship them together with the layout to which they belong.
   b. Wedge, block and strap band rails as required to prevent accidental bending of the rail.
   c. Switch point and stock rail assemblies shall be transported bolted, banded, and if necessary, "c" clamped together as one piece with heel block bolted in place for protection of switch point geometry.
3. Package all parts or packing boxes so that they are capable of being handled by a 20-kip capacity fork.

1.10 WARRANTY

A. Provide a manufacturer's warranty as follows for turnout design, fabrication, and materials:

1. Provide an unconditional warranty for replacement of defective products supplied under this Section and related Sections including both replacement materials and the labor and equipment associated with removal of the defective switch and installation of its replacement. Warranty shall extend for 3 years after delivery and acceptance of the final turnout unit on this Contract.
2. Warranties from third-party contractors will be accepted only if also accepted and endorsed in writing by the Contractor and subcontractors.

PART 2 - PRODUCTS

2.01 GENERAL REQUIREMENTS

A. Special trackwork materials, including oval-neck track bolts of 1-1/8” nominal diameter, nuts and spring washers, and special trackwork assemblies shall be in accordance with AREMA Manual for Railway Engineering (latest edition) except as modified on the contract drawings and specifications.

B. Rail, switches, frogs and other track material shall be in accordance with AREMA dimensional requirements for 115 RE rail section except as modified on the contract drawings and specifications.

C. Heel ends of switch rails and ends of stock, closure and connecting rails shall be beveled in accordance with AREMA requirements.

D. Cut all rail ends in accordance with AREMA requirements except that tolerance to be taken up in the rail base.

E. Drill rail ends to receive 36-inch, six-hole joint bars in accordance with AREMA requirements and as shown. Standard joints shall be drilled to allow butting of rail ends. Insulated joints shall be drilled to allow for a 1/4-inch end post. Drill holes in accordance with joint manufacturer’s instructions, plus or minus 1/32-inch.

F. All rail shall be in accordance with Section 34 11 23.23, Running Rail.
   1. Guard rails: 132 RE section
   2. All other rail: 115 RE section

G. Drill and ream holes with edges beveled.

H. All joints required for installation shall be new material.

I. Supply all ties in accordance with Section 34 11 33.16, Timber Track Cross Ties or Section 34 11 33.15, Concrete Switch Ties.

2.02 MATERIALS

A. Stock Rails, Closure Rails and Connecting Rails
   1. Length of rails: As shown plus or minus 1/8-inch.
   2. All ends drilled except ends to be connected to CWR which shall be drilled in the field.
   3. Connecting rail drilled to match frog guard rail drilling
   4. Standard Rail and weight shall be new 115 RE rail section, and shall be in conformance with AREMA Manual of Railway Engineering Chapter 4, Rail (latest edition).
   5. High Strength (Head Hardened) Rail

a. High strength rail shall meet all of the requirements of Standard Rail.
b. High strength rail shall be head hardened.
c. High strength rail shall conform to all requirements for high strength rail specified in the AREMA Manual for Railway Engineering, Chapter 4, Rail.
d. Minimum tensile strength: 171,000 psi.
e. Minimum yield strength: 120,000 psi.Rail lengths as identified in the contract documents. The standard rail length of rails shall be either 39, 78 or 80 feet.

7. Refer to Section 34 11 23.23 Article 2.01 for physical characteristics of running rails.

8. Undercut stock rails in accordance with the latest edition of AREMA Standard Plan No. 221, Detail 5100 for Curved Switch Point Detail and 6100 for Straight Switch Point Detail

9. Bend stock rails in accordance with AREMA Portfolio of Trackwork Plans (Latest Edition) and provide the bending tolerances on shop drawings.

10. Stock rails may be thick web or constructed with reinforcing bars.

11. Stock rail lengths: as shown or as required for switch panel.

12. Stagger stock rails leads as shown on WMATA's Standard Drawings

B. Turnout Frogs

1. Provide fabrication methods for No. 6 (guarded), No. 8 (guarded), No. 10 turnout and No. 15 frogs conforming to the general configuration shown on the Design Plans.
   a. Alternative methods of frog fabrication will be considered and evaluated based on whether the method is capable of furnishing the finished product consistent with that shown on the Design Plans.
   b. WMATA has the final decision regarding acceptance of alternate designs and methods of fabrication.

2. Provide a solid manganese steel frog design with welded rail steel frog arms according to the basic layout as shown on WMATA's standard drawings.

3. The complete frog with extended toe and heel arms of the approximate lengths as shown on WMATA's standard drawings and having a minimum Brinell Hardness Number (BHN) of 352 BHN throughout the arm length including the transition weld zone as follows:
   a. Furnish steel frogs consisting of one assembled piece providing a continuous top of rail running surface without connections and zero gaps.
   b. To improve the wheel to frog interface, cast or machine the running surfaces of the frog to simulate the top of rail head profile as shown on AREMA Portfolio; and fabricate the rail heads to project 1/4 inch above the surrounding frog surface to provide clearance for false wheel flanges and facilitate future rail head grinding. The frog running surface rail head profile shall match the abutting non-canted rail arms. Provide ramped surfaces on the rail head where the frog running surface projects to the edge of wheel tread, and where false flange condition in wheel would hammer the frog surface.
   c. Recess the toe of the casting frog body to provide clearance for application of a rail clip connection.
   d. Provide a base of rail profile similar to the 115 RE rail base configuration to permit the use of the same rail clip connection on the frog fastener plates.
   e. Provide component heights matching the 6-5/8 inch height of 115 RE rail.
   f. Frog casting
      1) No Wing Wheel Risers to be used, but frog insert to have depressed nose in accordance with AREMA Plan 600B-03 **(Attachment C)** and 622-09 **(Attachment D)**.
      2) Depth-harden all running surfaces of manganese frog castings using triple (3-shot) explosive depth hardening.
   g. Frog inserts
      1) Cast inserts of manganese steel with heat treatment in accordance with AREMA Specification M2.
         a) From M2.2, Austenitic Manganese steel in accordance with ASTM A128

b) From M2.2.2, all castings to be heat treated in accordance with ASTM A128

2) From M2.5, radiographic testing and/or sectioning will be used to qualify castings for acceptance of internal soundness, by the manufacturer. To verify radiographic testing, the qualification process may include sectioning of the castings. The internal soundness severity levels must be compared to AREMA Plan 1012-03 **(See Attachment E)** to determine compliance.

3) From M2.5.4.2 Radiographic testing shall be done in conformance with the latest issue of the following ASTM specifications:
   a) E – 94 Recommended Practice for Radiographic Testing
   b) E – 446 Reference Radiographs up to 2 inches in Thickness, (0"–2")
   c) E – 186 Reference Radiographs for Heavy Wall Steel Castings, (2"-4-1/2")
   d) E – 280 Reference Radiographs for Heavy Wall Steel Castings, (4-1/2"- 12")

4) Explosive Depth Harden all running surfaces of frog inserts in accordance with AREMA Specifications M2.7

5) Provide inserts of one-piece construction.

6) Provide inserts having full-face contact conforming to configuration of 115 RE rail.

7) Provide available bonding area per inch of length equivalent to that available for bonded standard joints where applicable. Adjust dimensions of bonded inserts to allow for glue and fabric.

8) Ensure the inserts are smooth and straight and do not exceed the following permissible variations:
   a) Width between rail webs: Plus or minus 1/32-inch of that shown.
   b) Depth of flangeway groove: Plus or minus 1/16-inch of that shown.
   c) Length of insert: Plus or minus 1/8-inch of that shown.
   d) Straightness of all portions of inserts adjacent to rail using 36-inch straightedge: Plus or minus 1/32-inch.
   e) Finishing height variance of inserts from that required for bonding area: Plus or minus 1/64-inch.

h. Assembly: Prior to delivery, assemble frogs as shown.

1) Bonding adhesive: As manufactured for bonded joint bars by Allegheny Rail Products or Portec Rail Products, Inc (L.B. Foster) or equal, applied as directed by the manufacturer to all contact surfaces between inserts and rail.

2) Secure frog, except for insert, with 1-3/8 inch diameter high -strength bolts in accordance with AREMA requirements.

3) Assemble inserts with 1-1/8 inch diameter high-strength bolts, ASTM A490, and lock nuts. Position bolt holes in accordance with AREMA Plan 621-09 **(See Attachment F),** AREMA Plan 1010-89 **(See Attachment G),** AREMA Plan 1011-84 **(See Attachment H)** and as shown. Bolt holes 1-3/8 inches in diameter plus or minus 1/32- inch.

4) Flat washers: ASTM F436.

5) Equip bolts as shown with one beveled or flat headlock washer and one flat or beveled washer to provide square bearing and to permit tightening of nuts by wrench.

6) Lock nuts: IFI-100 and IFI-101, ASTM A563, Grade C.

7) Tension bolts to between 75 percent and 85 percent of proof load. Exact value as directed by the Engineer. Ascertain bolt tension by means of torque wrench. Determine desired torque by test similar to that described in IFI-101.

C. Frog Guard Rails

1. Hook flange guard rail length: 12'-6"

2. Complete with separator blocks and bolts as shown on WMATA's standard drawings.

D. Switch Point Rails

1. Furnish both switch points having undercut design ("Sampson Point") in accordance with the latest edition of AREMA Plan No. 221, Detail 5100, except furnish all curved switch point rails with manganese tip in accordance with the latest edition of AREMA Plan No. 220.

2. Length

a. No. 6 Turnout Switch Points:
   1) 16’-6” Guarded Plated Straight Switch w/ Uniform Risers – Ballasted
   2) 16’-6” Curved Guarded Switch Rails – Direct Fixation
b. No. 8 Turnout Switch Points:
   1) 26’-0” Guarded Plated Straight Switch w/ Uniform Risers - Direct Fixation
   2) 26’-0” Unguarded Plated Curve Switch w/ Uniform Risers – Direct Fixation
   3) 26’-0” Guarded Plated Straight Switch w/ Uniform Risers – Ballasted
   4) 26’-0” Unguarded Plated Curve Switch w/ Uniform Risers – Ballasted
c. No.10 Turnout Switch Points:
   1) 22’-0” Curved Switch w/ Uniform Risers
d. No.15 Turnout Switch Points:
   1) 26’-0” Curved Switch w/ Uniform Risers

3. Switch Rails: As shown.
   a. Switch rails and stock rails: In accordance with Section 34 11 23.23, Running Rail, and the latest edition of AREMA Plan 221, Detail 5100 for Curved Switch Point Detail and 6100 for Straight Switch Point Detail.
      1) Stock rails may be thick web or constructed with reinforcing bars.
      2) Stock rail lengths: as shown or as required for switch panel.
   b. Bolts, rivets, fittings and spring washers in accordance with AREMA, Portfolio (Latest Edition).
      1) Fabricate five bolt heel joint assembly as shown on WMATA’s standard drawings and in accordance with the latest edition of AREMA Standard Plan No. 221 and AREMA Manual of Railway Engineering (Latest Edition).
      2) Fabricate forged steel rail stops in accordance with AREMA requirements.
      3) Switch inserts with bolts: As specified for frog inserts.
4. Drill stock rails for ballasted special trackwork as shown on WMATA’s standard drawings. Switch heaters will be furnished and installed by other trades.
5. Floating heel blocks for No. 10 and No. 15 switch as shown on WMATA’s standard drawings.
6. Fixed heel block assembly for No. 8 and No. 6 guarded switch as manufactured by LB Foster Rail Products or equal.
7. The guarded turnouts shall have a modified five bolt heel joint assembly to accommodate the stock rail, switch rail and guard rail in accordance with latest version of AREMA Portfolio (Latest Edition) and AREMA Manual for Railway Engineering.
8. Reinforcing bars:
   a. Furnish 1/2 inch and 1-1/4-inch-thick reinforcing bars, drilled and assembled to the switch point rails by square head bolts and hex nuts.
   b. Pin bolt assembly is not acceptable.
   c. Alternate switch point design using thick web rail is acceptable.
9. Length tolerance for switch point rails: plus or Minus 1/8 inch
10. Length tolerance for turnout lead distance: plus or Minus 1/4 inch
11. Tolerances for expanding measurements (allowance for thermal movement) in switches: plus or minus 1/16 inch
12. Switch point stops:
    a. Furnish switch point stops in accordance with AREMA Plan basic number 221-03 that bear against the supporting stock rails when the points are thrown into the closed position.
    b. Do not allow gaps between the stop and the web of the stock rail in the proper thrown position.

E. Switch Rods

1. Switch rods and clips of vertical design, Racor Type MJS series, modified as shown.
   a. Insulated construction

b. Assembled
c. Test in accordance with AAR requirements
d. Length: As shown

2. Switch rods must be capable of at least one (1) inch plus/minus adjustment after the initial specified 4-3/4 inch throw at the No.1 rod has been set.

3. Contractor's shop drawings shall provide the required spread measurement for each switch rod which are needed to support the specified throw.

4. Furnish vertical switch rods with dimensions of 1-1/4 inches by 2-1/2 inches and of sufficient length so that all rods extend under the stock rails in either thrown position.
   a. Provide a minimum clearance between the top of the switch rods and the underside of the stock rail of 1/16 inch and a maximum clearance of 3/16 inch.
   b. Equip No. 1 rod with an insulated adjustment basket in accordance with AREMA Manual of Recommended Practice – Signals (Latest Edition). Mount basket with drain holes on underside.
   c. All switches will be power operated by a throw rod connected to the switch rod basket.

5. Switch Rod Insulation:
   a. Insulate all switch rods.
   b. Before assembling a switch rod insulated basket joint or straight rod joint, clean mating surface and ends of switch rods, steel channel, and steel splice plates along with fiber plates of all foreign material, and coat those surfaces and ends with Glyptal Inc. Red Glyptal Number 1201, or accepted equal.
   c. After assembling a switch rod insulated joint, coat the entire insulated basket connection and joint assembly with Glyptal Inc.Red Glyptal Number 1201 insulation enamel, or accepted equal, in accordance with paint manufacturer's printed instructions. Basket assembly with provided drain holes shall be mounted with holes on the underside.

F. Rail Braces

1. Boltless adjustable brace equal to those formerly manufactured by Bethlehem Steel, modified to permit installation of 7/16 inch diameter electric switch heaters on rail web of ballasted turnouts.

2. Shop weld rail brace backing blocks (6" x 2" x 1/2") to switch plates.

3. Rail brace backing blocks to permit mounting on 3/4-inch thick flat plates. Allow for modification to fit 1/4-inch recessed gauge plates. Ensure that distance from rail base to horizontal bearing surface of backing block is the same in each case to permit use of standardized wedge.

4. Clearance between backing block and rail base: Determined by design of selected brace.

5. Brace shall use left-hand Pandrol spring clips e2056.

G. Switch, Frog and Guard Rail Plates

1. Furnish special trackwork units with special plates as shown, fabricated of 3/4-inch thick steel, ASTM A36 in accordance with designs shown or AREMA Portfolio.

2. Plates complete with specified rail base backing blocks, riser plates, rail stops and rail clamp blocks welded thereon.

3. Riser plates and rail stops fabricated of ASTM A36 steel as shown and as specified.

4. Punch holes in each plate perpendicular to face. Cut clean without torn or ragged edges.

5. Straighten plates cold in press or roller until surface and line requirements are met. The following tolerances are not cumulative.
   a. Plate thickness: Plus or minus 1/32-inch
   b. Middle ordinate: Place plate on horizontal support. Place straightedge or wire string from one end of plate to the other on the concave side. Measure distance between plate surface and straightedge or string line. Distance not to exceed 0.001 inch per inch of length with surface upsweep or downsweep uniform.

c. Plate thickness of dual rail stops, single rail stops and riser plates: Plus or minus 1/32-inch
d. Straightness of edge of dual rail stops, single rail stops and riser plates parallel and adjacent to base of running rail: Plus or minus 1/32-inch
e. Transverse dimension of dual rail stops: Plus or minus 1/32-inch
f. Tolerances other than those specified: Plus or minus 1/8-inch
g. Spike hole locations for ballasted special trackwork: Plus or minus 1/8-inch

6. Identification of plates:
   a. Stamp with suitably sized characters not less than 1/2-inch in height, located on top surface and plainly visible when assembled.
   b. Include Contract Number and identification designation as shown.

7. Fillet weld rail braces, rail stops, riser plates and rail clamps to their respective plates as shown in accordance with AWS D1.1.

8. In special trackwork fabricated for ballasted trackwork, seven inch wide elastic fastener tie plates suitable for e2056 Pandrol spring clips shall be used at all support locations not having special frog, switch, gauge or guard plates.

9. Furnish elastic spring clips (e.g., Pandrol “e” clips) as part of the switch plates and frog plates.
   a. Furnish left-hand mounting elastic spring clips.
   b. Provide rail clips of a boltless, threadless, elastic design, which permit removal of the rail, switch, or frog without removal of plate holding anchor bolts.
   c. The spring clip employed in the boltless design rail brace shall be the same product as employed in the running rail fastenings in the turnout.

H. Gauge Plates

1. Switch gauge plates as shown on WMATA’s standard drawings and as specified for plates.

2. Insulation shall be a four hole 7-1/2" x 8" x 3/4" epoxy fiberglass splice block fastened to the plate with Huck type compression fasteners. The insulating material shall have a tensile strength of 70 ksi, compressive strength of 100 ksi and a tensile modulus of 3.4×10^6.

I. Turnout Guard Rail

1. Length: As shown

2. Complete with blocks and bolts as shown

3. Type: 132 RE rail

4. Planned in accordance with the latest edition of AREMA Plan No. 504

J. Rail Joints

1. Furnish all standard and insulated joints within the turnout

2. End post shall be reinforced epoxy fiberglass or approved equal.

K. Guarded Turnouts

1. Guard Rail Stop:
   a. Ductile Iron: ASTM A536, Grade 65-45-12 to fit 115 RE rail and as supplied for New York City Transit Authority (NYCTA) guarded turnouts.
      1) Direct Fixation Turnouts:
         a) Ductile iron rail stops shall be attached to the steel plate with 7/8" square neck carriage bolts, ASTM A325, inserted through a square punched hole from the underside of the plate. A heavy hex nut, Grade 3 ASTM 563 and flat washer, weathering steel ASTM F436 shall complete the assembly; three bolts, nuts and washer per rail stop.
   b. Ballasted Turnouts:

1) Ductile iron rail stops shall be attached to the tie and plate; three studs with nuts and washers per rail stop. Cast rail stops and house chairs shall be fastened through the ties with7/8" diameter double end threaded studs, flat washers and heavy hex nuts. The nuts and washers shall be fastened to the stud on the underside of the tie and on top of the casting similar to NYCTA guarded turnouts.

c. The rail stop shall be backed with a 6" x 2" x 1/2" steel block welded to the rail plate.

2. Manganese Housing Assembly:
   a. Cast manganese steel: AREMA Manual of Railway Engineering (Latest Edition)
   b. Housing: Similar to that manufactured for the NYCTA
      1) Direct fixation - 6' - 2 1/2" long
      2) Ballasted track - 5' - 5" long
   c. Front 132 RE Guard Rail Lengths as shown on WMATA Standard Drawings:
      1) No.6 Guarded Turnout: 8'-1"
      2) No.8 Guarded Turnout: 6'-6"
   d. Housing Chairs: Ductile Iron ASTM A536 Grade 65-45-12, as manufactured for NYCTA
      1) Direct fixation housing chairs shall be fastened to steel plates and gauge plates similar to ductile iron rail stops, except that one hole, as shown, in each chair shall be sized for an anchor assembly instead of the square neck carriage bolt.
      2) Ballasted housing chairs shall be fastened to ties, steel plates and gauge plates similar to ductile iron rail stops.
      3) The first housing chair number shall be configured for bolting to a 132 RE guard rail which continues ahead of the point of switch as shown.
   e. No part of the housing shall extend more than 1-1/2 inches above the top of rail.

L. Elastomer Pads

1. Elastomer pads shall be furnished for use under special plates in special trackwork and shall be fabricated from polychloroprene (neoprene) as shown and as specified below.

2. Physical Characteristics
   a. Elastomer pads shall be 3/4 inch thick and extend 1 inch beyond the plate edges on all sides.
   b. All pads shall have a Durometer A hardness of 50 in accordance with ASTM D2240.
   c. Elastomer pads furnished for use under all special plates shall be cut from a uniformly cored sheet conforming to the following requirements:
      1) Coring shall consist of cylindrical holes 11/16 inch in depth. A continuous membrane 1/16 inch thick shall close one end of all holes.
      2) Cored holes shall be 1-5/8 inches on center measured between adjacent holes in all directions.
      3) Anchor bolt holes, 1-5/8 inch in diameter, shall be cut at the required locations on the pad.
      4) Tolerances for finished pads shall be as follows:
         a) Length and width: Plus or minus 1/4 inch.
         b) Thickness: Plus or minus 0.03 inch.
         c) Squareness: Plus or minus 1 degree.
         d) Centering of holes: Plus or minus 1/32 inch.
         e) Diameter of holes: Plus or minus 1/32 inch.
         f) Durometer: Plus or minus 5 points.
      5) The diameter of the core holes shall be determined by choosing from the appropriate column of **Attachment I**. The diameter corresponding to the diameter used in the test pad which passes the vertical load test specified below. The appropriate columns shall be as follows:
         a) Column A: Pads for use under all special plates having a longitudinal dimension greater than 12 inches measured along the rail shall have a diameter of 1-1/8 inches, except pads for use under plates 8-SR-1, 8-SR-2, 8-SL-1, 8-SL-2.
         b) Column C: Pads for use under plates 8-SR-1, 8-SR-2, 8-SL-1, 8-SL-2, and all special plates having a longitudinal dimension measured along the rail equal to or less than 12 inches shall have a diameter of 3/4 inch.

3. Testing of Elastomer Material
   a. The following test shall be performed on each of two pads or on specimens taken from two pads that are identical in all respects to the elastomer proposed for use in special trackwork. All testing shall be at no expense WMATA.
   b. In the event specimens cannot be taken from finished pads, samples certified by the supplier to have been taken from a batch of compound used for making the elastomeric component and having a cure equivalent to the cure of the elastomer component shall be used for the tests.
      1) The elastomer shall be tested in accordance with ASTM D412, to determine the tensile strength and the ultimate elongation. The tensile strength shall be not less than 1500 psi and the ultimate elongation shall be not less than 350 percent.
      2) The elastomer shall be tested for 22 hours at 100C in accordance with ASTM D395, Method B, to determine the percent of compression set. The compression set shall not exceed 30 percent.
      3) The elastomer shall be aged for 336 hours at 70C in accordance with ASTM D573. The change of hardness and the percentage of change from the original tensile strength and original ultimate elongation shall not exceed 40 percent. The change in hardness, measured on the Durometer A scale shall not exceed 10 points.
      4) The test specimens shall be tested in accordance with ASTM D1149, at a temperature of 40C, and at an ozone concentration of 50 pphm. The elastomer shall not exhibit any cracking when examined in accordance with ASTM D1149 at the end of a 100 hour exposure.
      5) The elastomer shall be tested at minus 10C for 94 hours in accordance with ASTM D1229, to determine the percent compression set at 30 minutes after release (t30 reading). The compression set shall not exceed 50 percent.
      6) One test for oil absorption shall be conducted with ASTM No. 3 oil at 100C for 70 hours and another test using a different sample shall be conducted with ASTM No. 1 oil at 100C for 70 hours in accordance with ASTM D471, to determine the volume change of the elastomer. The volume change for the No. 1 oil shall not exceed minus 10 or plus 20 percent. The volume change for the No. 3 oil shall not exceed 100 percent all not exceed 100 percent.
      7) Prior to commencing production of elastomer pad sheets, a prototype pad, using the chemical composition intended for production pads, shall be prepared and tested using a one inch by eight inch by one foot nine inch steel plate with two special plate anchorage assemblies two inches from the edges of diagonally opposite corners. The plate and the prototype pad shall be assembled, mounted on a reinforced concrete slab simulating actual field conditions, and subjected to the following tests.
         a) A vertical load increasing in increments of 1000 pounds to a maximum load of 15, 000 pounds shall be applied downward at the center of plate normal to the plate. For each load the vertical deflection of the center of the plate shall be measured to the nearest 0.001 inch and recorded. The load shall be removed and the final position of the plate measured and recorded. The recorded values for vertical load and deflection shall be plotted on a graph as illustrated in Specification Section 34 11 93, **Exhibit 34 11 93-C.**
         b) The load vs. deflection curve shall lie within the envelope illustrated in Specification Section 34 11 93, **Exhibit 34 11 93-C** for loads in the range from 4,500 pounds to the load corresponding to a 120,000 pound vehicle. Throughout that loading range, the spring rate of the fastener, slope of the load-deflection curve, shall not be less than 80,000 pounds per inch or more than 130,000 pounds per inch and shall be of a constant slope within 10 percent. In the event the curve fails to meet the requirements specified above, the chemical formulation of the pad, the coring size, or both shall be modified and the new elastomer pad design retested.
         c) An electrical resistance test with one anchor bolt grounded, 100 volts dc shall be applied to the rail head for three minutes. The actual current flow shall be measured to the nearest 0.1 microampere and recorded. Then 1000 volts dc shall be applied to the rail head for two hours, after which 100 volts dc shall be applied again for three minutes and the actual current flow shall be measured, as above,

and recorded. A potential of 50 volts rms ac shall be applied to the rail head for three minutes for each increment of measurement for frequencies from 20 Hertz to 10 kilohertz in increments of measurement of 20 Hz up to 100 Hz; 200 Hz up to 1000 Hz; and 2000 Hz up to 10 kHz. The impedance after three minutes shall be determined with an accuracy of plus or minus two percent and recorded for each frequency.

d) The maximum current for 100 volts dc shall be 1.0 microampere. The minimum impedance for any frequency with 50 volts rms ac shall be 10,000 ohms.

M. Separator Blocks

1. Separator blocks shall be 5-inches long made of steel or cast iron configured for a 1-7/8 inch flangeway between 115 RE running rail and 132 RE guard rail.
2. Separator blocks for double rail insulated joints shall be 18-inches long made of steel or cast iron configured for a 1-7/8 inch flangeway.
3. Locate separator blocks not more than 4’-0” on centers and as necessary to clear joint bars and anchor bolts
4. Connect separator blocks with a 1-3/8 inch x 8 inch high strength, square head bolt, spring washer and heavy hex nut with one beveled or flat headlock washer and one flat or beveled washer to provide square bearing and to permit tightening of nuts by wrench.

N. Guard Rail Joints

1. Except for the insulated joint shown in the rail layout diagram, joints in the guard rail shall not be nearer than four (4) feet to a joint in the 115 RE running rail.

O. Timber Ties

1. See Specification Section 34 11 33.16.

P. Concrete Switch Ties

1. See Specification Section 33 11 33.15.

Q. Anchor Assemblies – DFF Construction

1. Fully Threaded Anchor Studs (Retrofits)
   a. Comply with the requirements of Section 34 11 12 – Direct Fixation Track Construction
2. Anchor Bolt Inserts (New Construction)
   a. Comply with the requirements of Section 34 11 12 – Direct Fixation Track Construction

R. Running Surface Finish

1. Regardless of fabrication method, materials used for all running rail surfaces, including frog running surfaces and all rails within special trackwork units, must have a smooth ground surface to eliminate all mill scale and other surface impurities.
2. All rail shall have the rail head top and side surfaces’ finish ground smooth to remove all mill scale and manufacture residue.
3. Grind head of rail to match the existing curved rail head contour and finish to a smooth light grinding pattern.
4. Remove a minimum of 0.025 inch. If mill rail fabrication residue exceeds this depth, grind to establish a clean finished surface.

S. Running Surface Hardness

1. Regardless of construction, the materials used on all running surfaces of frogs, as well as all rails within special trackwork units, shall meet the hardness requirements below. Work hardening under traffic will not be considered in determining compliance with this requirement.
2. Running surface areas are defined as:
   a. The immediate rail head profile areas within 2-3/4 inches of the gauge lines.
   b. The gauge side of special trackwork items on the “high” side of a curve down to an elevation 1 inch below top of the wheel tread bearing surface.
   c. Flange-bearing areas of frogs, including ramps.
3. Explosive depth harden manganese steel castings in accordance with the AREMA “Specifications for Special Trackwork,” Paragraph M2.7, except that the minimum Brinell Hardness Number (BHN) shall be 352 BHN and AREMA Specifications for Special Trackwork, paragraph M2.7.5 does not apply.
4. Specify in the shop drawings the procedures to be used in the depth hardening process, the portions of each frog that are to be depth hardened, and the BHN pattern normally achieved using such procedures.
5. Proprietary procedures do not need to be disclosed, but must be described in sufficient detail to permit an understanding of how the specified hardness will be achieved.
6. When items are explosion depth hardened, inspect each item after process as follows:
   a. Visually inspect for cracks, flaws, or porosity; and conduct dye penetrant testing where results of visual inspections are inconclusive.
   b. On manganese steel castings, test surface hardness in accordance with ASTM E10.
7. Re-harden items that fall below the specified hardness range at no additional cost to WMATA.
8. Items testing above (harder than) the specified hardness range may only be accepted at the sole discretion of WMATA provided that proof is presented that the excess hardening has not created a martensite metallurgical microstructure
9. Repair or replace items found to be defective or damaged.
   a. Reject and do not repair items having defects detected in their immediate wheel running surfaces.
   b. Replace non-repairable items at no additional cost to WMATA.

PART 3 - EXECUTION

3.01 INSTALLATION

A. Direct Fixation Special Trackwork Fabrication

1. Fabrication of special trackwork for direct fixation track shall be as specified and shall comply with the applicable related Sections:
   a. General Track Construction (GTC), Section 34 11 00
   b. Direct Fixation Trackwork Construction (DFTC), Section 34 11 12
   c. Special Trackwork Construction - Direct Fixation, Section 34 11 12.10
   d. Direct Fixation Rail Fasteners, Section 34 11 36.13
2. Tolerances
   a. The final gauge, cross level, superelevation, horizontal alignment and vertical alignment of direct fixation special trackwork shall be as shown and specified. Tolerances shall be as specified for direct fixation track construction for GTC. Switch points in normal position shall be square within 5/8 inch.

B. Ballasted Special Trackwork Fabrication

1. Fabrication of special trackwork for ballasted track shall be as specified and shall comply with the applicable related Sections:
   a. General Track Construction (GTC), Section 34 11 00
   b. Ballasted Track Construction (BTC), Section 34 11 11
   c. Special Trackwork Construction – Ballasted (Wood Ties), Section 34 11 11.10
   d. Track Appurtenances and Other Track Material, Section 34 11 93
   e. Timber Track Cross Ties, Section 34 11 33.16
   f. Concrete Switch Ties, Section 34 11 33.15
2. Tolerances
   a. The gauge, cross level, superelevation, and horizontal and vertical alignment of ballasted special trackwork shall be as shown and specified. Tolerances shall be as specified for ballasted track construction for BTC. Switch points in normal position shall be square within 5/8 inch.
   b. Screw spike holes drilled in ties shall be 11/16 inch diameter and not less than five inches nor more than six inches deep.
   c. Tolerance of plus or minus 1/16 inch shall be maintained for the distance between screw spike holes.
   d. Tolerance of plus or minus 1/8 inch shall be maintained in the centering of screw spike holes across the width of the tie.
3. Wood Ties shall be bored for screw spikes, and only screw spikes will be permitted in special trackwork.
4. The number and locations of holes shall conform to the location and number of screw spikes shown for each special plate.
5. Elastic fastener tie plates shall have four screw spikes, one at each corner.
6. Boring of holes in excess of those required will not be permitted.
7. Boring in timber ties shall be performed with the heartwood face down. Holes bored in timber ties shall be treated with pentachlorophenol oil immediately after boring.
8. Holes shall be located so that each tie plate will be centered on the tie at a right angle to the rail.
9. Prior to installing tie plates, the surface of the tie shall be swept clean to allow full bearing of the plate on the tie.
10. Boring and spiking will ensure that the outside shoulder of the plates will have full bearing against the rail base when the rails are at proper line and gauge.
11. Spikes shall be started vertically and square, and shall be installed straight. Straightening of spikes will not be permitted. Spikes bent during installation shall be withdrawn and the holes plugged (with treated tie plugs if wood, as per manufacturers instruction if composite). Screw spikes shall be installed firmly to the top surface of the plates.
12. All special plates, not in the switch panel, which span two or more ties shall not be spiked during shop assembly to preclude un-spiking for disassembly and packaging. The Contractor's method for locating these plates, drilling the ties and holding the plates in place during shop assembly and inspection shall be approved by the Engineer.

C. Identification Markings:

1. As shown on the drawing, each turnout has an identification number. This number shall be stamped on a metal tag and the tag affixed to each panel and separate component bundle.
2. Tags shall be made of corrosive-resistant metal such as anodized aluminum or brass. Fastening nails shall be of the same material as the tags. Numbers shall be stamped in characters 1/2 inch minimum in height. Tags shall be a minimum of 0.050 inches thick, 1-1/4 inches wide and two inches long.
3. Labeling

a. Paint the identification on the web of all rails, frogs, and similar components, on both ends clear of the weld zone and insulated joint bar area according to the rail layout details shown.
b. Paint rail joint members on the head of each rail at every joint.
c. Carefully stencil-paint the markings in two contrasting colors (e.g. black letters on a light green, blue, yellow, or red background) with different color codes corresponding to each special trackwork turnout layout.
    1) Right-hand crossover turnouts shall be red and green
    2) Left-hand crossover turnouts shall be yellow and blue
    3) Even identification-numbered turnouts in the yard shall be green
    4) Odd identification-numbered turnouts in the yard shall be yellow
    5) Do not confuse installation identification numbers with the internal shop work order numbering system.
d. Only have painted installation numbers on furnished track items.
e. Paint markings on track items are in addition to the permanent identification plates required by Article 8, Markings of the AREMA Specifications for Special Trackwork.

4. Assign a unique identification number to welded and insulated joints in special trackwork layouts to facilitate field assembly.
    a. Use a numeric code and color scheme that indicates both the joint number and the special trackwork layout.
    b. Joint numbers may only be painted onto the components.
    c. Paint adjoining turnouts' component joint numbers in different colors to simplify component distribution.

5. For each major special trackwork component – switch rails, stock rails, frog, and closure rails – provide either a stainless steel plate or a cast steel tag permanently attached to the item with fabricator's markings indicating piece identification number, plan number and manufacturer.

6. Provide markings on switch ties with an identification number keyed to the shop assembly plan.

D. Painting

1. Other than identification markings, do not paint special trackwork items prior to shop assembly and WMATA's inspection.

2. Items painted prior to shop assembly and inspection will be rejected.

3. After special trackwork has been inspected and accepted by WMATA, items are to be painted or coated with metal primer paint or an oil base coating to prevent against immediate rusting or corrosive actions to protect them from corrosion during shipping and storage.

4. Do not conceal identification markings or inspector's marks by this painting or coating.

E. Package and label parts and replacement materials in moisture-proof containers suitable for shipment and storage.

F. Take special care to package anchor inserts for direct fixation rail fasteners, so as to prevent damage to the epoxy coating.

G. Submit method of packaging to the Contractor's QC Staff for acceptance before shipping the anchor inserts.

H. Attach copies of shipping list in the package and so that the list is readable from the exterior of the package.

ATTACHMENT A

AREMA PLAN NO. 1021-03

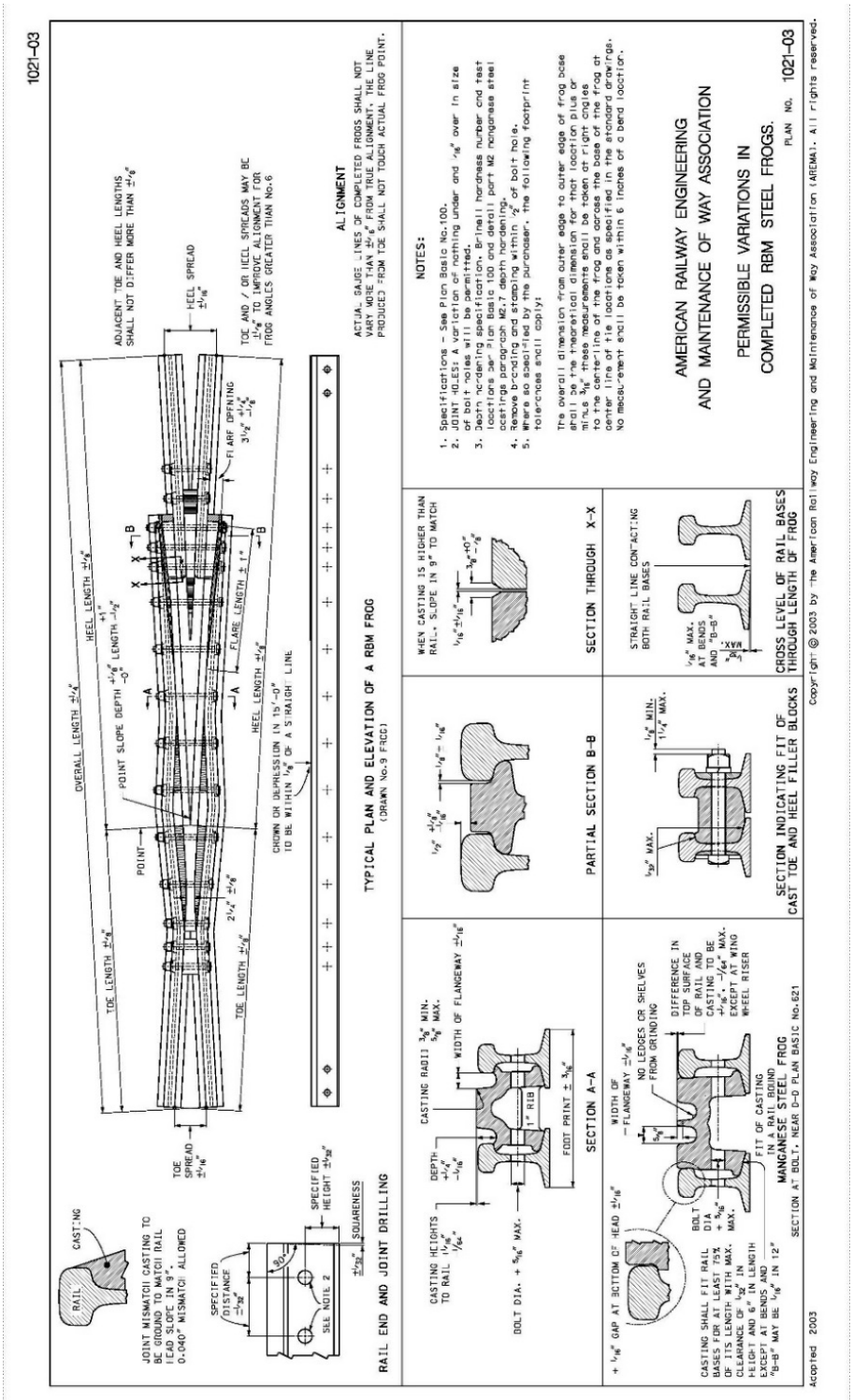

ATTACHMENT B

AREMA PLAN NO. 1020-03

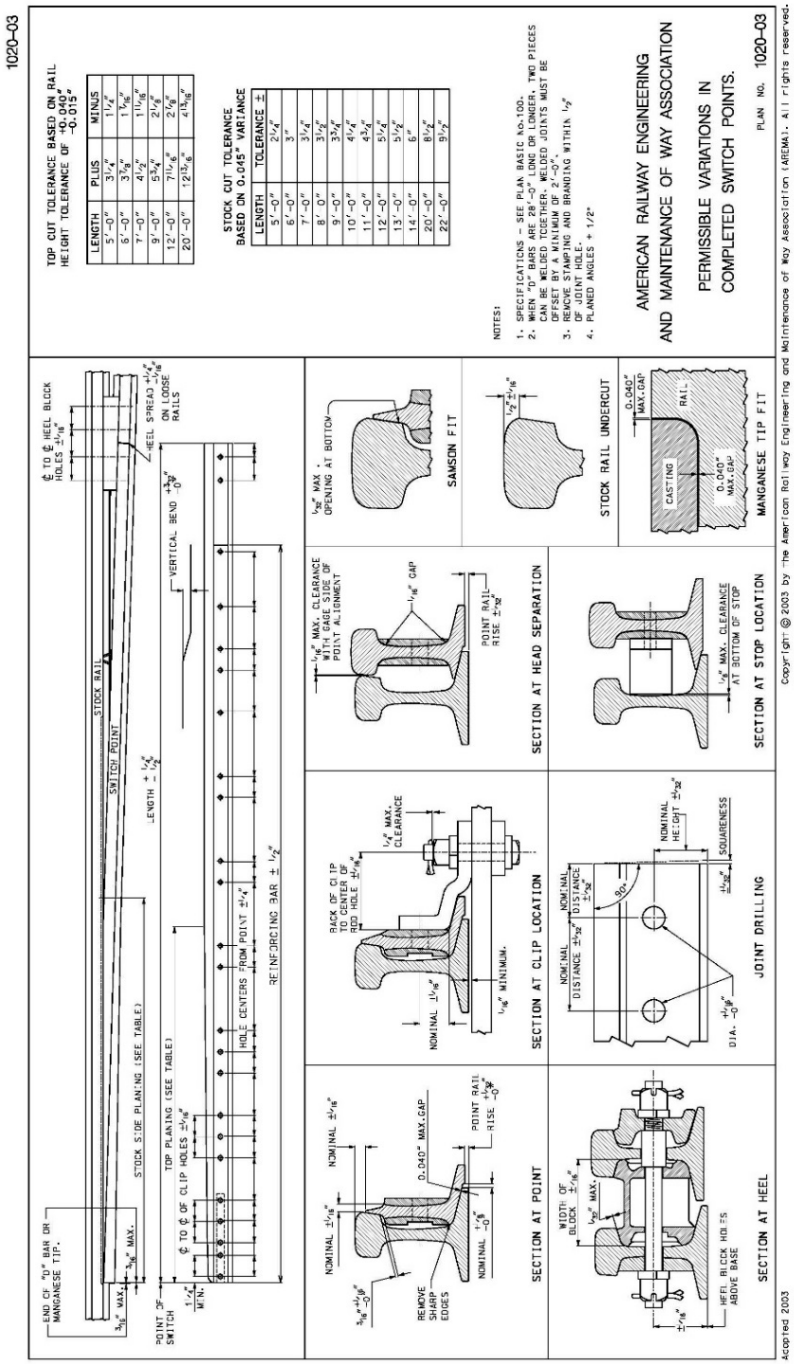

ATTACHMENT C

AREMA PLAN NO. 600B-03

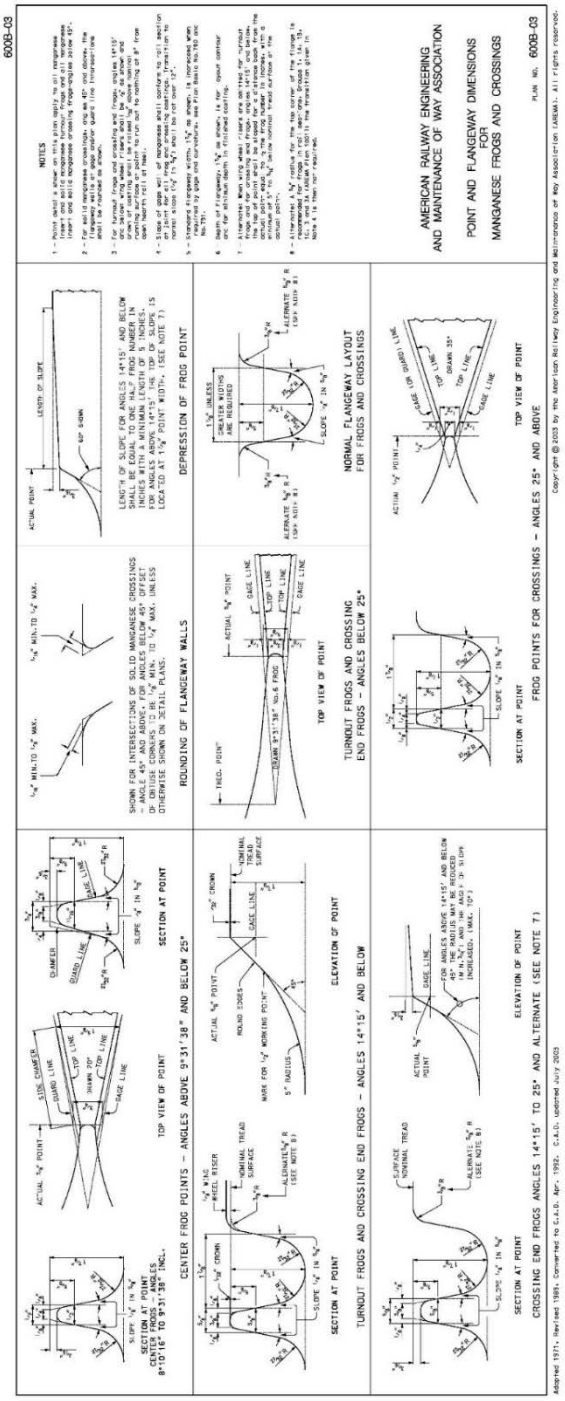

ATTACHMENT D

AREMA PLAN NO. 622-09

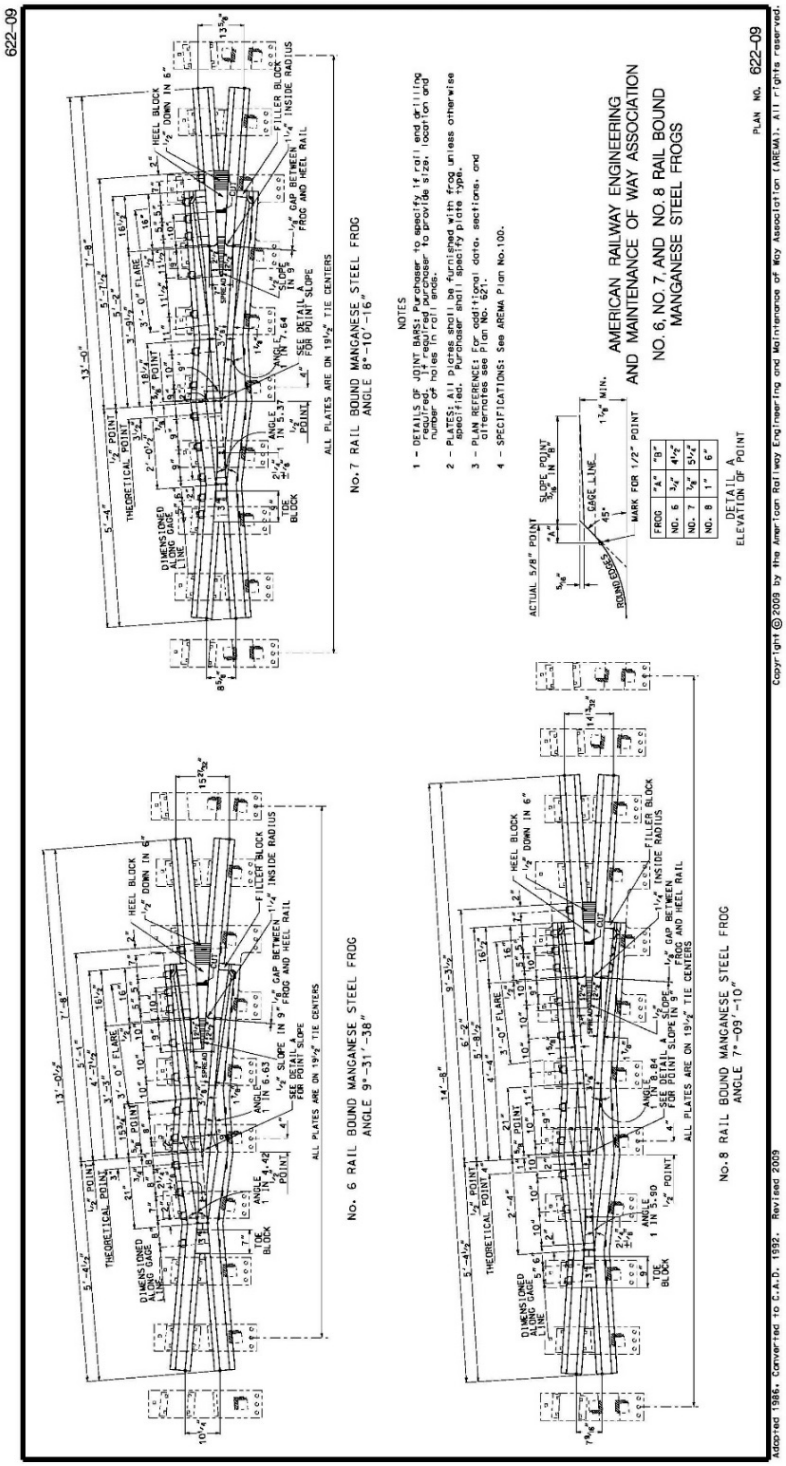

ATTACHMENT E

AREMA PLAN NO. 1012-03

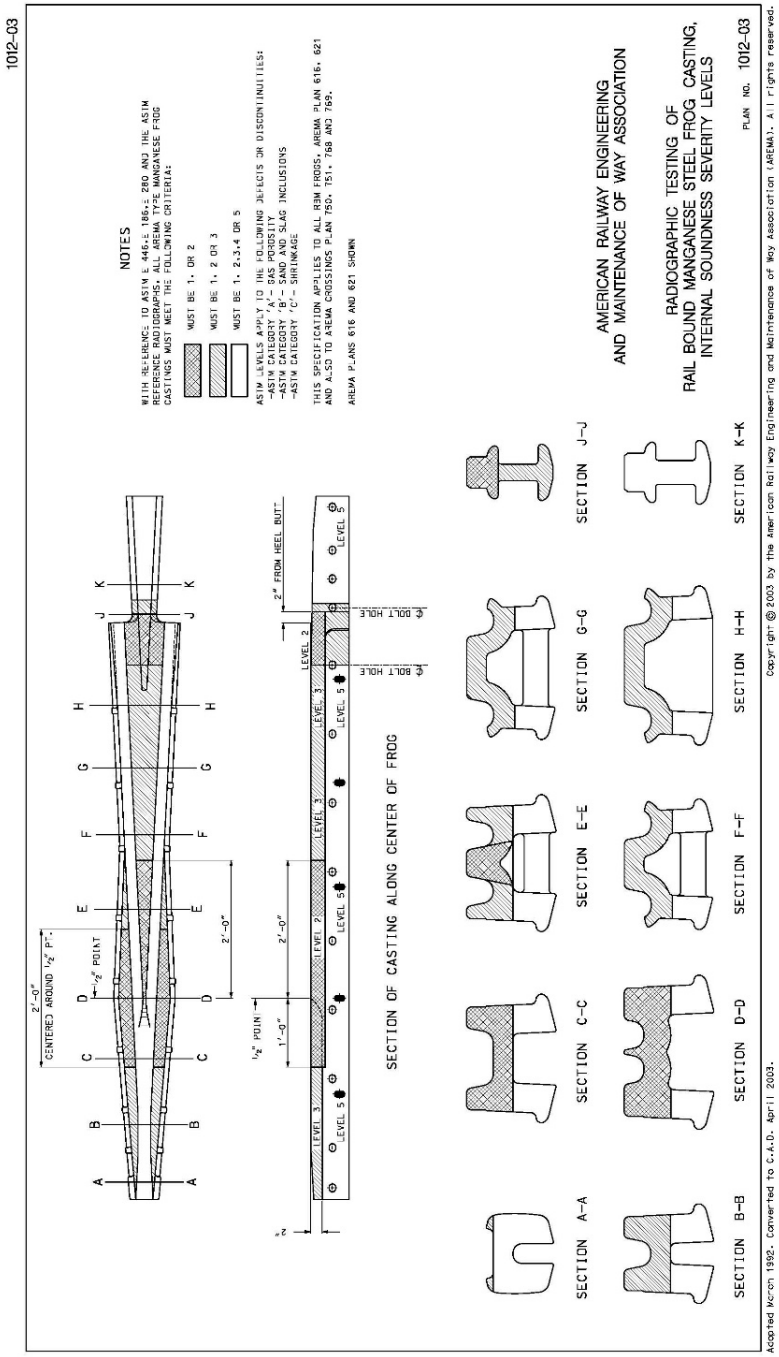

ATTACHMENT F

AREMA PLAN NO. 621-09

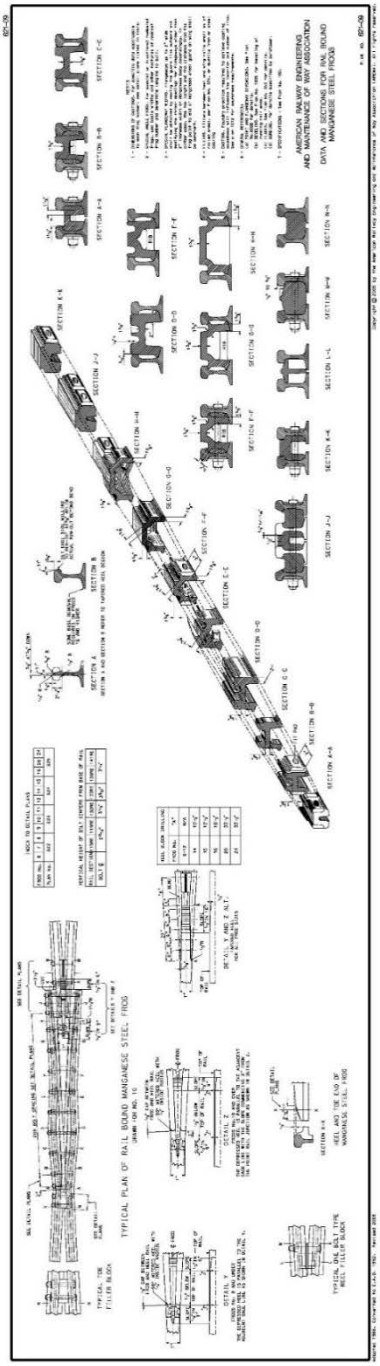

ATTACHMENT G

AREMA PLAN NO. 1010-89

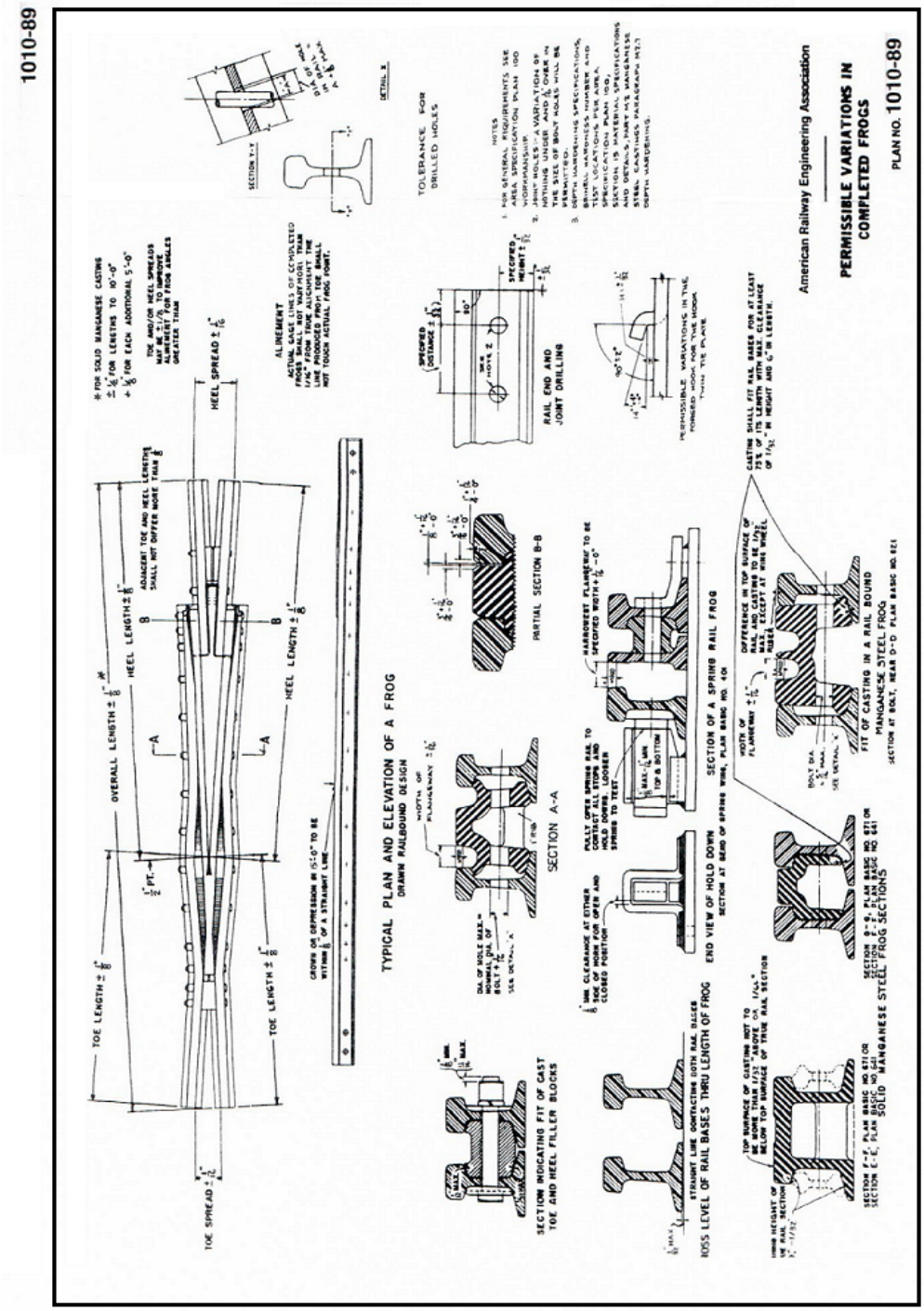

ATTACHMENT H

AREMA PLAN NO. 1011-84

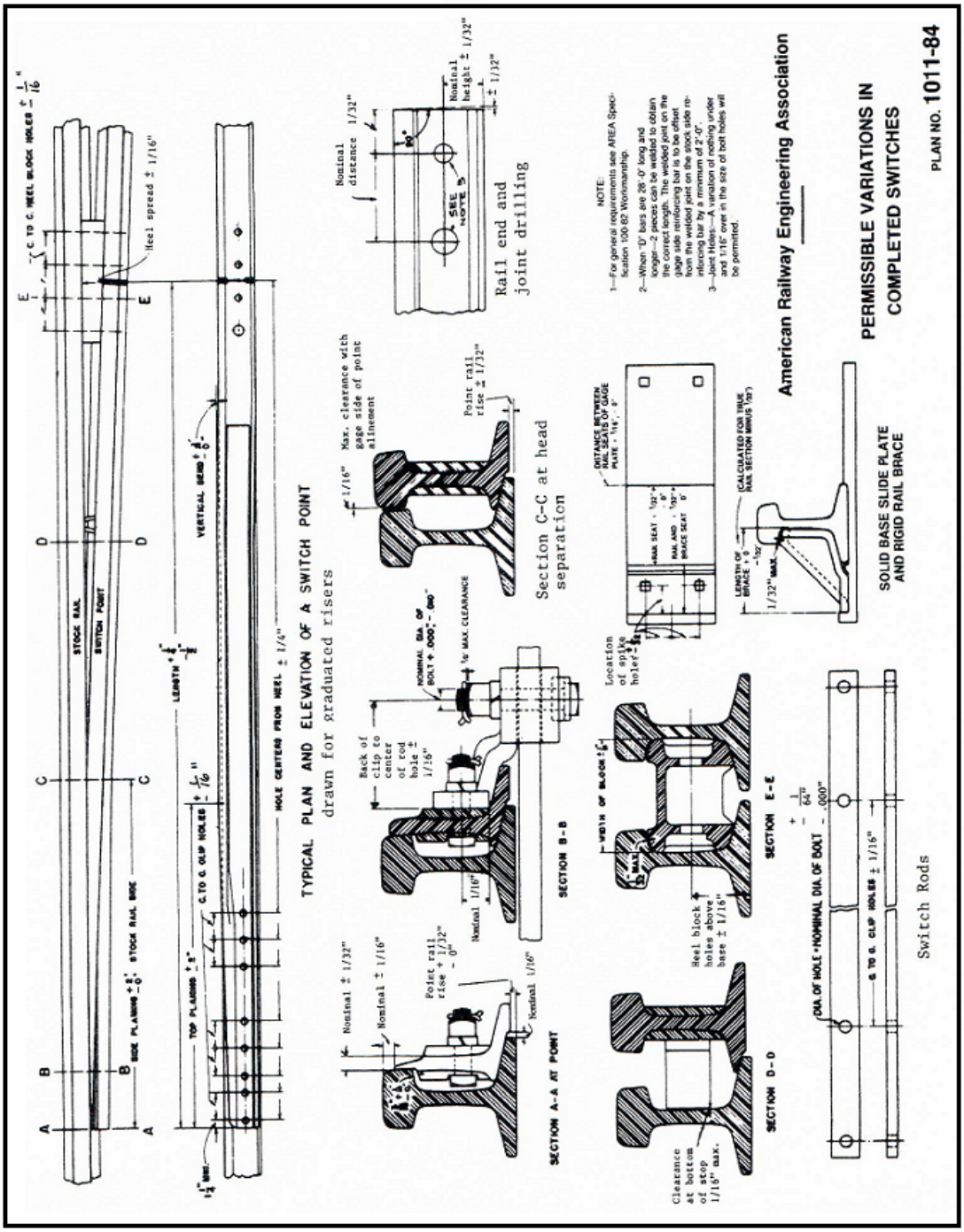

ATTACHMENT I

CORE DIAMETER TABLE FOR SPECIAL PLATE ELASTOMER PAD

	TEST	A	B	C
HOLE DIAMETER (in.)	5/8	1	7/8	5/8
	3/4	1-1/8	1	3/4
	7/8	1-3/16	1-1/16	7/8
	1	1-1/4	1-1/8	1

RECOMMENDED HOLE DIAMETERS

CORING DIAMETER TABLE
FOR
SPECIAL PLATE ELASTOMER PAD

metro — CORING DIAMETER TABLE FOR SPECIAL PLATE ELASTOMER PAD	DRAWING NO. EXHIBIT 05659-G	
	SCALE N/A	SHEET NO. 1 of 1
DEPARTMENT OF TRANSIT INFRASTRUCTURE AND ENGINEERING SERVICES		CONTRACT NO. N/A

END OF SECTION

SECTION 34 11 33.16

TIMBER TRACK CROSS TIES

PART 1 - GENERAL

1.01 RELATED DOCUMENTS

A. Standard Drawings and General Provisions of the Contract, including General and Supplementary Conditions and Division 01 Specification Sections, apply to this Section.

1.02 SUMMARY

A. Section Includes: Furnishing timber cross ties, contact rail ties and switch ties.

B. Related Requirements:

1. Section 34 11 00 - General Track Construction
2. Section 34 11 11 - Ballasted Track Construction
3. Section 34 11 11.10 - Special Trackwork Construction – Ballasted (Wood Ties)
4. Section 34 11 23 - Special Trackwork
5. Section 34 11 37 - Restraining Rail and Lubricators

1.03 PRICE AND PAYMENT PROCEDURES

A. Measurement and Payment Procedures:

1. Measurement of work specified in this section will be made in the following manner:
   a. No separate measurement.
2. Compensation for work specified in this section will be in the following manner:
   a. Included in the price of the work of which it is a part.

1.04 REFERENCES

A. Reference Standards:

1. AREMA Practical Guide to Railway Engineering Combo Set
2. AWPA T1 – Use Category System: Processing and Treatment Standard
3. AWPA M3 – Standard for the Quality Control of Preservative Treated Products for Industrial Use

1.05 SUBMITTALS

A. Product Data:

1. Name of the timber supplier and/or the area of timber acquisition.
   a. Submit production and delivery schedules in adequate time for inspection of the ties

2. Manufacturer's catalog cuts, drawings, material specifications, installation and maintenance instructions.
3. The seasoning and handling methods
4. Data regarding proposed machining
   a. including stamping, boring, and dapping
5. Proposed method of delivery.
   a. Submit not late than 60 days prior to delivery.
6. Proposed anti-splitting devices and location in tie.
7. Proposed manner of marking treated ties to indicate compliance with specifications.
8. Certificate of Compliance with AWPA M3 for tie treatment.

1.06 QUALITY CONTROL

A. Preconstruction Testing:

1. WMATA, or its representatives, reserve the right to visit the producers facility during usual business hours unscheduled to: a) observe sampling and inspection procedures, b) obtain samples of the prepare material being produced and shipped, and c) review plant inspection methods, quality control procedures, equipment and examine inspection test results of current and previous tests.

B. Inspections:

1. The Engineer will inspect in accordance with pertinent sections of the AREMA Manual (latest edition), as modified herein.
2. Averaging of dimensions, with respect to measurement for size acceptance, is not permitted.
3. Provide suitable equipment, facilities and assistance required by the Engineer to effect inspections.
4. Inform the Engineer when treated wood is ready for inspection.
5. Do not deliver material until inspected and approved for shipment by the Engineer.
6. Final inspection and approval of ties will occur as a part of the final inspection of installed ballasted track.

C. Non-Conforming Work:

1. Failure to meet any pertinent part of AREMA requirements (latest edition) or these specifications constitutes cause for rejection.
   a. AREMA inspection requirements are to include, but not limited to, the physical requirement inspection criteria as outlined in Chapter 30, Section 3.1.1.4 (decay, holes, knots, shake, split, checks, slope of grain, bark seams and manufacturer defects).

1.07 DELIVERY, STORAGE, AND HANDLING

A. Storage and Handling Requirements:

1. It shall be the Contractor’s responsibility to make all arrangements for storage, shipment and handling of the ties.
2. Tie stacks shall not exceed 20 layers each.
3. Ties will be stacked with branding visible.

4. Ties shall be handled in a manner that prevents damage.
5. Ties shall not be dropped or dragged on the trackbed.

PART 2 - PRODUCTS

2.01 TIMBERS

A. The following requirements apply to timber ties prior to final acceptance. Ties shall be back sawn and free from any defects that may impair their strength or durability such as decay, large splits, large shakes, slanting grain, or large or numerous holes or knots.

1. Decay: Disintegration of the wood substance due to the action of wood destroying fungi."
2. Holes: A large hole is one more than 7/16 inches in diameter and 3 inches deep within or more than 0.25 times the width of the surface on which it appears. Numerous holes are any number equaling a large hole in damaging effect. Such holes are not permitted.
3. Knots: Within the rail bearing areas, a large knot is one having an average diameter more than 0.33 times the width of the surface on which it appears; but such a knot shall be allowed if it is located outside the rail bearing area. Numerous knots are any number equaling a large knot in damaging effect. Such knots are not permitted.
4. Shake: A separation along the grain, most of which occurs between the rings of annual growth. The length of a shake shall not be greater than 0.33 times the width of the tie. Shakes shall not be located within 1 inch of any edge,
5. Split: A separation of the wood extending from one surface to an opposite or adjacent surface.
6. Cross Grain: Ties with excessive cross grain are not permitted.

PART 3 - EXECUTION

3.01 REQUIREMENTS

A. General Requirements:

1. All ties shall be new.
2. Physical requirements in accordance with the AREMA manual, as modified herein. (Reference the physical requirement criteria as outlined in Chapter 30, Section 3.1.1.4 - decay, holes, knots, shake, split, checks, slope of grain, bark seams and manufacturer defects).
3. AREMA 7" Grade.
4. All rail-bearing areas shall measure as follows: 7-inch grade cross ties shall be 7″× 9″ in cross section with a maximum of 1 inch of wane in the top rail-bearing areas
5. The grade of each tie shall be determined at the point of most wane on the top face of the tie within the rail-bearing areas. The rail-bearing areas are those sections between 20" and 40" from the center of the tie. The top of the tie shall be the narrowest face and/or the horizontal face farthest from the heart or pith center.
6. All ties shall be Oak wood species.
7. Sawed top, bottom and sides.
8. Free of checks over two inches deep or extending more than eight inches from end of tie.

B. Anti-splitting devices shall be nail plates in accordance with the AREMA Manual, as modified herein.

1. Minimum size 5 - 2 inches x 7 inches.
2. Nail plates shall be installed by a method or machine that presses them into the end of the tie. Hammer installation of nail plates is not allowed and will be a cause for the rejection of the ties.
3. Incise all sides prior to treatment to a depth of 3/4 inch. Thickness of incisor teeth shall not exceed 7/32 inch.
4. Free of knots greater than ½ inch diameter for areas indicated in the AREMA Manual.

C. Individual Requirements:

1. Cross ties:
   a. Length: Eight feet six inches.
   b. Straightness: A cross tie will be considered straight when a line along a side from the middle of one end to the middle of one end to the other end is everywhere more than 2-3/4 inches from the top and bottom of the tie.
   c. A tie is not well-sawn when its surfaces are cut into with score marks more than 1/2" deep, or when its surfaces are not even.
   d. The top and bottom of a tie will be considered parallel if any difference at the sides or ends does not exceed 1/8".
2. Contact rail ties:
   a. Length: Ten feet.
   b. Free of knots greater than inch diameter in area of contact rail insulator, i.e., 100 through 110 inches from line end.
   c. Straightness: A contact rail tie will be considered straight when a line along the tip from the middle of one end to the middle of the other end is everywhere more than two inches from both sides.
3. Switch ties:
   a. Switch ties within Special Trackwork, as shown on the drawings.
   b. Length: As shown in the contract documents.
   c. Free of knots greater than ½ inch diameter for areas indicated in the AREMA Manual.
   d. Straightness: A contact rail tie will be considered straight when a line along the top from the middle of one end to the middle of the other end is everywhere more than two inches from both sides.

D. Preservative Treatment:

1. All timbers shall be bored for screw spikes. The holes shall be treated with copper naphthenate.
2. Ties shall be treated in accordance with the requirements of AWPA Standard C6 for Cross Ties and Switch Ties. Conditioning prior to treatment shall be in accordance with Paragraph 3.2, Boulton Drying Process, of the above standard.
3. Immediately following conditioning, the ties shall be pressure treated. Because of the environmental problems and other reasons, alternative preservative used shall be copper naphthenate. The minimum quality control requirements shall be in accordance with AWPA Standard M3. The treating company shall furnish a Certificate of Compliance with this standard, and shall certify the treatment according to the foregoing Specification.
4. The WMATA Engineer will determine when ties are ready for treatment.
5. Use only tested and approved preservatives.
6. Stamp each treated tie to indicate compliance with these specifications.
7. Complete AREMA or AWPA forms for treatment of ties.

E. Inspection

1. Advise the Contractor's QC Staff when timber is ready for shipment to the Worksite and do not ship any material until the Contractor's QC Staff has cleared the material for shipment. Brand each tie for quality control as specified, indicating compliance with these Technical Provisions,
2. The Contractor's QC Staff shall inspect ties prior to shipment to the Worksite. Turn over each tie while the Contractor's QC Staff makes a reasonably close inspection of the top, bottom, sides and ends. Each tie shall be judged independently without regard for the decisions on others in the same lot. Ties too muddied for ready examination shall be rejected. Ties which have stood on their ends on the ground shall be rejected.

END OF SECTION

SECTION 34 11 35

WOOD PRESERVATIVE TREATMENT

PART 1 - GENERAL

1.01 RELATED DOCUMENTS

A. Drawings and general provisions of the Contract, including General and Supplementary Conditions and Division 01 Specification Sections, apply to this Section.

1.02 SUMMARY

A. Section Includes: wood preservative treatment of timber and lumber using the following treatment methods:

1. Creosote
2. Pentachlorophenol and copper naphthenate
3. Water-borne preservatives

B. Related Requirements:

1. Section 06 10 00 Rough Carpentry
2. Section 34 11 00 General Track Construction
3. Section 34 11 11.10 Special Trackwork Construction – Ballasted (Wood Ties)
4. Section 34 11 33.16 Timber Track Cross Ties
5. Section 34 11 34.16 Timber Grade Crossings

1.03 REFERENCES

A. Abbreviations and Acronyms:

1. AWPA: American Wood Preserver's Association.

B. Definitions:

1. PPT: Pressure-preservative treated.
2. FRT: Fire-retardant treated.
3. MSDS: Material safety data sheets.

C. Reference Standards:

1. Codes, Regulations, Reference Standards and Specifications:
   a. Comply with codes and regulations of the jurisdictional authorities.
2. AWPA Standards: C2, C3, C9, C20, C27, C35, M4, P1, P2, P5, P8, P17.

1.04 SUBMITTALS

A. Submit the following for approval in accordance with the General Requirements and with the additional requirements as specified for each:

1. Product Data: Manufacturer's product data and MSDS, including instructions for handling, storing, installing and finishing treated material.

2. Certification: Submit certification that furnished meet specified requirements with each shipment of treated timber and lumber.

1.05 DELIVERY, STORAGE, AND HANDLING

A. Storage and Handling Requirements:

1. Storage:
   a. Ensure that storage area has been cleared of debris and vegetation to at least four feet beyond limits of stored materials.
   b. Provide drainage away from stored materials.
   c. Store piles of timber and lumber so as to permit ready access and free air circulation.
   d. Store treated timber and lumber at least 12 inches above surface of ground.
   e. Stack ties no more than 20 layers high nor 10 feet wide.

2. Handling:
   a. Handle treated items with rope slings or other approved means. Do not drop, bruise, break outer fibers or penetrate surface with sharp tools.
   b. When stacking timber, avoid use of sharp tools for handling or turning in leads.

PART 2 - PRODUCTS

2.01 MATERIALS

A. Creosote: AWPA P1.

B. Creosote and Coal-Tar Solution: Coal-tar distillate or solution of coal tar in coal-tar distillate conforming to AWPA P2.

C. Pentachlorophenol: AWPA P8.

D. Copper Naphthenate: AWPA P8.

E. Waterborne Preservatives: AWPA P5.

F. Fire Retardant Formulations: AWPA P17.

2.02 SOURCE QUALITY CONTROL

A. Use only preservative treatment materials which have been tested and approved.

B. After treatment have each piece of material stamped with the American Wood Preserver's Institute Quality Mark to indicate compliance with specified requirements.

C. Inform the Engineer when treated wood is ready for inspection.

D. Ship treated wood only after inspection and approval.

PART 3 - EXECUTION

3.01 APPPLICATION

A. Unless otherwise shown, apply preservative treatments as follows:

1. Creosote: Apply creosote treatment to wood which meets all of the following :
   a. Is to be in contact with water or earth.
   b. Is to be exposed to weather but not painted.
   c. Is not subject to handling after installation.
2. Pentachlorophenol and copper naphthenate: Apply pentachlorophenol and copper naphthenate treatment to wood which meets all of the following:
   a. Is exposed to the weather.
   b. May or may not be painted.
   c. Is subject to handling after installation.
3. Water-borne preservatives:
   a. Use in approved locations.

B. Treatment:

1. General:
   a. Prior to treating timber and lumber, perform fitting, cutting, drilling and mortising of joints.
   b. After treatment, kiln-dry lumber and plywood to a maximum moisture content of 19 and 15 respectively.
2. Pressure treat timber and lumber in accordance with AWPA C2. For creosote, creosote solutions and oil-borne preservatives, use empty-cell treatment. If retention specified is greater than can be obtained by empty-cell process, inject water-borne preservative by full-cell process.
3. Piles: Unless otherwise shown, apply creosote treatment to timber piles in accordance with AWPA C3.
4. Poles: Unless otherwise shown, apply creosote treatment to timber poles in accordance with AWPA C35.
5. Plywood (PPT): Pressure preservative treat plywood where indicated in accordance with AWPA C9.
6. Plywood (FRT): Pressure fire retardant treat plywood where indicated in accordance with AWPA C27.
7. Miscellaneous Wood Framing: Treat indicated items and the following in accordance with AWPA C2:
   a. Wood cants, nailers, curbs, equipment support bases, blocking stripping and similar members in connection with roofing, flashing, vapor barriers and waterproofing.
   b. Wood sills, sleepers, blocking, furring, stripping and similar concealed membrane in contact with masonry or concrete.
   c. Wood framing members less than 18 inches above grade.
   d. Wood floor plates installed over concrete slabs directly in contact with earth.
8. Fire-Retardant Treatment for Lumber (FRT): Fire-retardant wood treatment in accordance with AWPA C20.
9. Incising:
   a. For lumber with least dimension between two inches and three inches, incise wide faces by means of suitable power-driven machine prior to treatment.
   b. For timber with least dimension in excess of three inches, incise all four faces.

C. Treatment of field cuts:

1. Treat bare surfaces resulting from drilling, cutting, tapping or damage of timber and lumber in accordance with AWPA M4.
2. Apply same treatment to cutoff surfaces of timber piles not embedded in concrete.

END OF SECTION

SECTION 34 11 36.13

DIRECT FIXATION RAIL FASTENERS

PART 1 - GENERAL

1.01 RELATED DOCUMENTS

A. Drawings and general provisions of the Contract, including General and Supplementary Conditions and Division 01 Specification Sections, apply to this Section.

1.02 SUMMARY

A. Section Includes: Furnishing all labor, materials, and equipment for the manufacture, testing, fabrication and delivery of direct fixation rail fasteners for installation in underground box structures, aerial structures and at-grade slabs.

1. Specification and supply of these fasteners does not include rail clips and anchor bolt assemblies.

B. Related Requirements:

1. Section 34 11 00 - General Track Construction
2. Section 34 11 12 - Direct Fixation Track Construction
3. Section 34 11 12.10 - Special Trackwork Construction - Direct Fixation
4. Section 34 11 23.23 - Running Rail
5. Section 34 11 93 – Track Appurtenances and Other Track Material

1.03 PRICE AND PAYMENT PROCEDURES

A. Measurement and Payment Procedures:

1. Measurement of work specified in this section will be made in the following manner:
   a. No separate measurement.
2. Compensation for work specified in this Section will be made in the following manner:
   a. Included in the price of the work of which it is a part.

1.04 REFERENCES

A. Reference Standards:

1. American Railway Engineering and Maintenance-of-Way Association (AREMA), Manual for Railway Engineering herein referred to as AREMA Manual (latest edition)
2. American Railway Engineering and Maintenance-of-Way Association (AREMA), Portfolio of Trackwork Plans, herein referred to as the AREMA Portfolio (latest edition)
3. AISC ASD Manual of Steel Construction
4. ASTM A36/A36M Standard Specification for Carbon Structural Steel

5. ASTM A123/A123M – Standard Specification for Zinc (Hot-Dip Galvanized Coatings on Iron and Steel Products
6. ASTM A148/A148M Standard Specification for Steel Castings, High Strength, for Structural Purposes
7. STM A449 Standard Specification for Hex Cap Screws, Bolts and Studs, Steel, Heat Treated, 120/105/90 KSI Minimum Tensile Strength, General Use
8. ASTM A536 Standard Specifications for Ductile Iron Castings
9. ASTM A615 Standard Specifications for Deformed and Plain Billet Steel Bars for Concrete Reinforcement
10. ASTM A668 Standard Specification for Steel Forgings, Carbon and Alloy, for General Industrial Use
11. ASTM B117 Standard Test Method for Salt Spray (Fog) Testing
12. ASTM C31 Standard Practice for Making and Curing Concrete Test Specimens
13. ASTM C39 Standard Test Method for Compressive Strength of Cylindrical Concrete Test Specimens
14. ASTM C172 Standard Practice for Sampling Freshly Mixed Concrete
15. ASTM D256 Standard Test Methods for Determining the Izod Pendulum Impact Resistance of Plastics
16. ASTM D257 Standard Test Methods for DC Resistance or Conductance of Insulating Materials
17. ASTM D297 – Density and Specific Gravity
18. ASTM D395 Standard Test Methods for Rubber Property – Compression Set
19. ASTM D412 Standard Test Methods for Vulcanized Rubber and Thermoplastic Elastomers — Tension
20. ASTM D429 Standard Test Methods for Rubber Property – Adhesion to Rigid Substrates
21. ASTM D471 Standard Test Method for Rubber Property – Effect of Liquids
22. ASTM D518 Resistance to Surface Cracking
23. ASTM D570 Standard Test Method for Water Absorption of Plastics
24. ASTM D573 Standard Test Method for Rubber – Deterioration in an Air Oven
25. ASTM D624 Standard Test Method for Tear Strength of Conventional Vulcanized Rubber and Thermoplastic Elastomers
26. ASTM D638 Standard Test Method for Tensile Properties of Plastics
27. ASTM D648 Standard Test Method for Deflection Temperature of Plastics Under Flexural Load in the Edgewise Position
28. ASTM D695 Standard Test Method for Compressive Properties of Rigid Plastics
29. ASTM D746 Standard Test Method for Brittleness Temperature of Plastics and Elastomers by Impact
30. ASTM D785 Standard Test Method for Rockwell Hardness of Plastics and Electrical Insulating Materials
31. ASTM D792, Density and Specific Gravity
32. ASTM D1149 Standard Test Methods for Rubber Deterioration-Cracking in an Ozone Controlled Environment
33. ASTM D1229, Low Temperature Compression Set of Vulcanized Elastomers

34. ASTM D1248 Standard Specification for Polyethylene Plastics Molding and Extrusion Materials for Wire and Cable
35. ASTM D1505 Standard Test Method for Density of Plastics by the Density-Gradient Technique
36. ASTM D1525 Standard Test Method for Vicat Softening Temperature of Plastics
37. ASTM D1693 Standard Test Method for Environmental Stress-Cracking of Ethylene Plastics
38. ASTM D2084, Cure Characteristics
39. ASTM D2196 Standard Test Methods for Rheological Properties of Non-Newtonian Materials by Rotational Viscometer
40. ASTM D2240 Standard Test Method for Rubber Property – Durometer Hardness
41. ASTM E23 Standard Test Methods for Notched Bar Impact Testing of Metallic Materials
42. ASTM G101 Standard Guide for Estimating the Atmospheric Corrosion Resistance of Low-Alloy Steels
43. Rubber Manufacturers Association (RMA) Handbook
44. Society of Automotive Engineers (SAE)
45. NIST Publication Calibration Standards
46. SSPC Vis 1 Guide to Pictorial Surface Preparation Standards for Painting Steel Surfaces

1.05 SUBMITTALS

A. LEED Submittals:

1. Product Certificates for Credit MR 5.1[**and Credit MR 5.2**]: For products and materials required to comply with requirements for regional materials, certificates indicating location of material manufacturer and point of extraction, harvest, or recovery for each raw material. Include statement indicating distance to Project, cost for each regional material, and fraction by weight that is considered regional.

B. Shop Drawings:

1. Submit Shop Drawings and other data, including design calculations, which are required by the Specifications or which are necessary to adequately perform the work. Shop Drawings are to be complete and detailed.
2. Submit all drawings, data and schedules in accordance with the specified time requirements. If time requirements are not specified, submit in timely manner to permit no less than 21 days for appropriate review by the WMATA Engineer.
3. Contractor submittals shall be checked, coordinated, and approved by the Contractor before they are submitted for the approval of the Engineer. Submittals lacking Contractor's approval may be returned to the Contractor for resubmission.

C. Samples:

1. Unless otherwise indicated, submit not less than two identical samples of the direct fixation fastener.
2. Label each sample indicating:
   a. Contract Name and Number
   b. Name of Contractor and Subcontractor
   c. Material or equipment represented
   d. Source
   e. Name of producer and brand
   f. Reference Specifications Section and Article Number

D. Quality Control Program Plans

1. Quality assurance/control plan as specified herein.

2. Test program plan as specified herein.

E. Qualifications Test Results

1. Previous qualifications test reports are acceptable subject to subcontractor demonstrating to contractor the fastener and test procedures are identical to and in compliance with the requirements specified herein. Submit the following:
   a. Qualification Test Reports and certifications for review and approval prior to commencing fastener manufacture.
      1) Certification of the elastomer samples used in the qualification testing
      2) Elastomer qualification test results for each test specified herein
      3) Fastener body metal qualification test results for each test specified herein
   b. Submit qualification test results within 14 days after completing of testing. Submit elastomer certification with the elastomer qualification test results.
   c. Testing laboratory data describing location and qualification
   d. Test Procedure describing test equipment, instrumentation, calibration process and certificates, test procedures, and test result report and formats

F. Narrative description of manufacturing process describing sources of all components, material descriptions, elastomer compounding and molding process.

G. Installation Instructions: Drawings with narrative describing fastener installation procedure with particular attention to lateral adjustment, shims, bolt torque and rail clip installation

H. Production Test Results

1. Submit the following for review and approval prior to shipping each fastener production lot.
   a. Certification of the elastomer samples used in the production testing of each production lot as detailed herein.
   b. Elastomer production test results for each test specified herein.
   c. Fastener production test results for each test specified herein.

I. Delivery: Submit the method and materials of packaging for shipment and storage no later than 60 days prior to the initial shipment.

1.06 EXTRA MATERIALS

A. Furnish extra materials, from the same product run, that match products installed and that are packaged with protective covering for storage and identified with labels describing contents.

1. Fasteners and all associated materials required for appropriate installation should be furnished with an additional 10 percent of quantity installed.

1.07 QUALITY ASSURANCE

A. Develop and maintain a quality assurance program regulating methods, procedures, and processes to ensure compliance with standards of quality required by the Contract Documents.

1. Include in the Quality Assurance Program an Inspection and Testing Plan (ITP), subject to review by WMATA. Submit the detailed ITP within 30 days of Notice of Award and include therein the following information for each identified inspection and test:
   a. List of inspections and tests to be performed.
   b. Identify the Specification paragraph containing the inspection or test requirements.
   c. Identify who is responsible for each test: Contractor or sub-supplier.

d. Schedule of inspections and tests.
e. Identification of independent test laboratories if any is to be used.
f. Identify the characteristics to be inspected, examined and tested at each activity point.
g. Specify inspection and test procedures and acceptance criteria to be used.
h. Identify inspection checklists and test reports.
i. Identify hold points as described herein below.

2. Do not commence any inspection or test until the ITP has been reviewed and accepted by WMATA. During the life of the Contract, update the ITP to reflect any changes in the inspection or test requirements.

3. Implementation of Quality Assurance Program:
   a. Provide adequate staff and resources to perform all quality activities and to ensure Contract compliance, whether the Work is performed at the Contractor's own facility, provided by a sub-supplier, or on location at the project.
   b. Supplier Control: Perform source inspections and audits at major supplier's facilities to assess compliance with the requirements of the Quality Assurance Plan and the Contract Documents.
   c. Control of Measuring and Testing Equipment:
      1) Describe in the Quality Assurance Plan the methods for ensuring that equipment used for measuring and testing is calibrated as applicable to provide accurate test and inspection results. At intervals established to ensure continued validity, verify or calibrated measuring and testing devices against certified national standards that are traceable to National Institute of Standards and Technology (NIST).
      2) Establish methods to ensure proper handling, storage, and care of measuring and test equipment to maintain the required accuracy of such equipment. Material and test equipment that is considered out-of- calibration or that has been subjected to possible damage shall be identified as non-conforming and shall be removed from service, replaced, or repaired according to the manufacturer's instructions. Review all inspections or tests accepted by the use of the nonconforming measuring and test equipment since its last valid calibration date, to ensure acceptability.
      3) Ensure that all measuring and testing equipment selected for measurements, tests, or calibration is of the proper range, type, and is controlled, adjusted, and maintained at specified intervals identified in the Quality Assurance Plan or before use to assure conformance to the established requirements or predetermined accuracy.

B. All work undertaken by the Contractor before approval of his quality assurance program will be at the Contractor's risk. The Project Manager will monitor the Contractor's methods, procedures, and processes for compliance with the approved program.

C. Keep complete records of all inspection work by the Contractor available to the Project Manager during the performance of the Contract; and to such other agencies and for longer periods as may be specified elsewhere in the Contract.

D. Final Approval for Manufacturing of Each Type of Fastener

1. Upon WMATA approval of Article 1.04 Submit Items A thru G, the contractor shall submit to WMATA the following:
   a. Six copies of the final approved shop drawings of the fastener with all comments and modifications required to pass the qualification testing;
   b. Three complete rail fasteners with all approved modifications incorporated including all hardware as specified herein;
   c. Six Copies of the certified statements describing the chemical composition of elastomer and metal components of the rail fastener;
   d. Six Copies of the certified laboratory report of the results of all qualification tests specified herein showing compliance with all acceptance criteria specified.

2. Alteration of Fasteners – After approval of the rail fastener by WMATA as ready for manufacturing, no change in the design or manufacturing process shall be made without written

approval by WMATA. WMATA may require the testing, certification, and approval of any altered rail fastener at no additional cost to WMATA. All manufacturing of rail fasteners which have not been approved by WMATA shall be at the contractor's risk.

E. WMATA, or its representatives, reserve the right to make unscheduled visits to the producers facility during usual business hours to:

1. Observe sampling and testing procedures;
2. Obtain samples of the prepare material being produced and shipped;
3. Review plant inspection methods, quality control procedures, equipment and examine test results of current and previous tests.

1.08 DELIVERY, STORAGE, AND HANDLING

A. Storage and Handling Requirements:

1. Fasteners shall be packed and shipped in a manner that shall prevent a load on any fastener from exceeding 1,000 pounds.
2. Fasteners shall not be stored by the Contractor in a wet location or where the ambient temperature will exceed 120 degree F.
3. Fasteners shall be packaged on wood pallets and wrapped in minimum 6 MIL plastic to permit outdoor storage in a secured area. Rail hold-down assemblies, shoulders, bolts, nuts and other loose items shall be packaged by component type in secure shipping kegs or boxes and clearly identified. The method and materials of packaging shall be submitted for approval by the WMATA Engineer.
4. The Contractor shall replace all fasteners damaged during packaging, pre-delivery storage and shipping without additional cost to WMATA.
5. Fasteners shall be delivered FOB to WMATA furnished storage sites as directed by the WMATA Engineer to the Washington Metropolitan area. Unloading and final storage will be by others. Provide the WMATA Engineer two week notice prior to any fastener delivery.
6. Fasteners used in the production quality control testing shall be packed and labeled separately from the rest of their lot.

1.09 WARRANTY

A. Manufacturer's Warranty: Manufacturer and Installer agree to repair or replace direct fixation fasteners that fail(s) in materials or workmanship within specified warranty period.

1. Warranty Period: 1 year from date of Substantial Completion.

PART 2 - PRODUCTS

2.01 DESIGN REQUIREMENTS

A. Furnish "off the shelf" DF fasteners designed to meet or exceed the requirements of these Specifications.

B. Provide fastener of a design in continuous daily service for at least 5 years with a proven record of successful performance.

C. The direct fixation rail fasteners shall have the following primary functions:

1. Support the running rail and secure it to the concrete trackbed using the minimum number of parts possible.
2. Provide vertical, lateral and longitudinal stability, and provide for vertical and lateral adjustments.
3. Provide a specific longitudinal restraint.
4. Provide electric insulation for the rail, thus isolating it from the concrete trackbed.
5. Isolate vibrations and attenuate noise generated by the moving wheel of the vehicles on the rails.

D. Type of Fastener and Components

1. Furnish fasteners with one-piece body designed for use on 115 RE (5-1/2-inch base width) Rail section.
2. The body of the fastener is a metal base element and a metal top element with an elastomeric pad bonded between them. Bonding shall occur during the vulcanization process.
3. The design feature shall be integrally cast into the top plate component at a minimum height of 9/32 inches from the top of the rail seat and shall extend across the entire width of the fastener body in the direction longitudinally to the running rail on both field and gauge sides.
4. Furnish standard rail fasteners having a spring rate of between 94,000 pounds per inch and 120,000 pounds per inch for vertical loads between 4,500 pounds and 12,000 pounds.
5. Furnish standard rail fasteners having a longitudinal restraint of between 1.600 pounds and 3,000 pounds.
6. Furnish rail fasteners that bond the elastomeric component of the rail fastener on its bottom surface to a base plate not less than 1/4-inch thick and bond the elastomeric component of the rail fastener's top surface to a plate.
7. The rail hold down spring clips shall be considered part of the fastener and shall be Pandrol "e" clip non-threaded components.
8. Except as required to meet other requirements specified herein, elastomer surfaces shall be smooth with a finish and appearance equal to or better than an F-3 designation in accordance with the RMA Handbook.
9. Furnish rail fasteners comprised of as few components as is economically and technically feasible for ease of assembly, disassembly, and maintenance.
10. Furnish rail fasteners designed to permit installation and replacement of the entire assembly or its components by one man using standard, conventional hand tools.
11. The bottom of the base element shall be free of elastomer except that minimal flashing will be acceptable providing it does not interfere with retention of proper anchor bolt tension.

E. Properties in Installed Position

1. The base of the fastener is parallel to the rail seat so as to provide no cant to the rail. The slope tolerance is plus and minus 0.37%. The rail seat area is flat having maximum convexity and concavity of less than 0.001 inch per inch when measured from a straight edge.
2. Do not furnish fasteners having projections into leveling pads or plinth concrete.
3. Bonding of the rail fastener to the plinth concrete or leveling pads will not be permitted.
4. The underside of the rail fastener body shall be a flat, continuous plane with no projections below the top of the grout pad.

F. Dampening of Forces

1. Furnish rail fasteners designed to provide damping of lateral and vertical forces transferred to anchor bolts.
2. Furnish fastener plates having full bearing on the elastomer in all positions of lateral adjustment and having a means of preventing displacement of the elastomer under operating conditions.
3. Furnish rail fasteners with stability in directions not solely dependent upon the strength of bonding of the elastomer to metal.

G. Anchorage Assemblies

1. For retrofit construction, the fastener body anchorage assembly shall provide for two fully threaded studs, each 7/8 inch in diameter, for securing the fastener to the epoxy grout pad and concrete track bed. As shown in **Exhibit A** the anchorage assembly bolts shall be located in the upper right-hand quadrant and low left-hand quadrant of the rail fastener as referenced along the centerline of rail. The rail fastener shall also be designed to be capable of being anchored by placement over existing 7/8-inch threaded stud bolts in lieu of the anchor bolts and female anchor inserts.
2. For new concrete plinth construction, the fastener body anchorage assembly shall be comprised of two epoxy coated female type anchorage inserts for embedment into the concrete plinth and two anchor bolts for securing the fastener to the concrete plinth.
3. The fastener body anchorage design shall not pass through the top plate and shall anchor thru the bottom plate only.
4. The adjustment washers shall be designed so that they can be used for either the anchor bolts or the threaded studs.
5. Female Inserts with Anchor Bolts (New Construction):
   a. The fastener includes anchor bolts, 7/8 inch in diameter, for securing the fastener to the concrete trackbed under a tension of 30,000 pounds per anchor bolt.
   b. The anchor bolts will be threaded into female threaded inserts set in the concrete trackbed.
   c. Anchor bolts, including washers, and threaded inserts shall be considered parts of the fastener.
   d. The fastener is also capable of being anchored by placement over 7/8 - inch threaded studs.
   e. The anchor bolts engage not less than one inch and not more than one and one -half inches of the threaded insert in the installed position.
   f. Other than the standard protective coating as applied by the bolt and insert manufacturers, no oil, sealant or other compound shall be applied to the threads.
   g. Calculate the minimum bolt insertion length into the insert to provide anchorage strength.
   h. Submit drawings, at a minimum scale of 1:1, that demonstrates that the proposed anchor bolt and insert combination will accommodate the full range of vertical adjustment specified in this Section. Illustrate in these drawings the length of anchor bolt insertion into the insert under both the maximum and minimum shim conditions. Decrease bolt insertion length by an additional 1/16 inch under the maximum shimming condition, to allow for cases where the top of insert is recessed 1/16 inch below the top of concrete.
6. Fully Threaded Anchor Studs (Retrofits):
   a. Fully threaded anchor studs shall be 7/8 - inch diameter and 11 inches long for retrofitting direct fixation trackwork anchor installations and shall conform to ASTM A449 except that chemical requirements shall conform to ASTM A325 for Type 3 bolts, with the chromium, nickel, and copper elements in such combination to achieve maximum corrosion resistance consonant with strength and hardness requirement. (See Exhibit 34 11 93-D)

H. Restraint Properties and Rail Release

1. Indicate the restraint properties of the rail fastener in both longitudinal directions and in both lateral directions.

2. Furnish rail fasteners providing a positive means of preventing more than a total of 1/8-inch total lateral movement of the rail base relative to the fastener on each side of the rail base in the event of failure or loosening of one or both rail hold-down spring clip elements.
3. Furnish rail fasteners permitting the release of the rail hold-down spring clip elements so that the rail may be removed by lifting it vertically until it is completely free of the fastener without disturbing the horizontal or vertical alignment of the fastener body.
4. The rail hold down assembly device shall not be dependent on elastomeric components in torsion.
5. Longitudinal and lateral restraint properties of the rail fastener shall be identical in both directions.
6. The stability of the rail fastener in the lateral direction shall not be dependent solely upon the strength of the bond of the elastomer to metal.

I. Dimensional and Shape Requirements

1. Furnish fasteners that are generally rectangular in shape.
   a. Include keying, peg and socket, or turned up plate edges in the bottom plate and top plate so that loss of elastomer bond does not result in complete loss of the fastener's ability to hold track line and gauge.
2. Height:
   a. The overall distance between the base of the rail fastener and the base of the rail with the rail fastener in the installed position shall be 1-1/2 inches (desired) with 1-3/8" minimum and 1-3/4" maximum distances.
   b. No portion of the completely assembled rail fastener, including the rail clips and anchor bolts, shall extend any higher than 3-1/2 inches measured vertically from the base of the rail centerline.
3. Length and Width:
   a. When completely assembled, the overall dimension of the rail fastener, including the elastomer, shall stay within a design envelope of 10 inch maximum in width measured parallel to the rail and 18 inch maximum in length measured normal to the rail.

J. Adjustment Requirements

1. Lateral Adjustment
   a. The rail fastener body shall provide a means of 1 inch total lateral adjustment having a range of plus or minus 1/2 inch via a serrated mechanism at each anchor location. Serration shall be vertical, a minimum of 5/32 inches high and integrally cast into the bottom plate. The bottom of the vertical serration shall be raised a minimum of 1/8 inches above the top of the bottom plate. Together with a serrated adjustment washer, the system shall allow adjustment in either lateral direction in increments of 1/8 inch. Friction alone as a means of adjustment will not be permitted. The serration shall have not less than three interlocking serrations engaged in any position of lateral adjustment. The adjustment feature shall be integral with the rail anchorage assemblies.
   b. Friction shall not be used as a means for adjustment or for preventing lateral movement.
   c. If lateral adjustment employs serrations on any component, each serrated interface shall have at least three engaged serrations. There shall be a minimum of three linear inches of serration engagement per fastener. Serrations shall be machined or cast to a minimum depth of 1/16 inch. Cap plates, if used, shall cover the opening to any ground potential in every position of adjustment and form a reasonable seal to prevent the intrusion of dirt, metallic particles, and other material.
   d. Each rail fastener shall be furnished with all components required for all specified increments of lateral adjustment. Components of the rail fastener shall not be replaced or added to the basic configuration in order to laterally adjust the rail.
   e. Recesses in the rail fastener shall be free draining in all positions of lateral adjustment up to a maximum actual superelevation of 4-1/2 inches.

2. Vertical Adjustment
   a. Vertical rail adjustment capability shall be a maximum of 9/16 inch in 1/16 inch increments, provided by shims.
   b. All requirements of these Specifications shall be satisfied for all increments of fastener adjustment.

K. Electrical Isolation

1. The rail fastener body shall provide an electrical leakage distance of not less than 1-1/8 inch measured from the grounded portion of the fastener to the charged portion by the most direct path that does not pass through an insulating material. The minimum distance of separation between any points of the top plate to the bottom plate shall be 2 inch and shall contain a full and complete section of elastomer material. The entire top and side surfaces of the metal plates of the fastener body shall contain a minimum coating of 1/16 inch, exclusive of the serrated area of the fastener body anchorage location.
2. Meet the insulation requirements within the body of the fastener. Separate or detachable insulating components such as rail base pads or spring clip insulators are not allowed.
3. No surface cut-outs, gaps, edge voids, or edge cut-outs are allowed that could permit an accumulation of dirt, metallic particles, or other material.

2.02 COMPONENT MATERIAL REQUIREMENTS (ALL DIRECT FIXATION FASTENERS TYPES)

A. Metal Plate Components:

1. Metal Components:
   a. Both the metal top plates and bottom plates shall be one-piece ductile iron. The minimum thickness of the top plate shall be 1/2-inch and for the bottom plate 3/8 inch.
   b. The ductile iron castings shall be minimum Grade 65-45-12 in accordance with ASTM A536, “Standard Specifications for Ductile Iron Castings“. The chemical composition shall meet the acceptable level per SAE J434, “Automotive Ductile Iron Castings“. The Brinell hardness when tested in accordance with ASTM E10, “Standard Test Method for Brinell Hardness of Metallic Materials“, shall be within 156-217 BH range per SAE J434.

B. Elastomer:

1. The minimum thickness of the elastomer between the top plate and the bottom plate parallel to the rail seat shall be 1/2 inch.
2. The elastomer shall be neoprene or natural rubber or a blend of neoprene and natural rubber. Fabricate the elastomer using a minimum of 51 percent natural rubber.
3. Provide a natural rubber design based on a Durometer Shore A measurement of 70 plus or minus 10, as measured in accordance with ASTM D2240 Test Method for Rubber Property – Durometer Hardness.
4. Anchor bolts shall not pre-compress the elastomer in their installed position.

C. Rail Hold Down Assembly:

1. Rail clip shall be a resilient spring clip type such as the Pandrol e-2056 (left handed) and as specified herein. Spring-wedge type rail clips will not be permitted. Rail clip shoulder shall be cast as integral part of the metal top plate. Welding of the rail clip shoulder to the top plate will not be permitted.
   a. Materials - Rail clips shall be forged from alloy steel bars and heat treated to achieve the minimum spring action holding power as specified herein.
   b. Minimum Design Criteria:
      1) Clips must be one piece, threadless and detachable.
      2) There shall be two clips to each complete rail fastener assembly.

3) Holding force shall be generated by spring action.
4) Surface hardness of clips shall be between 44 and 48 HRC.
5) The range of vertical hold down force (toe load) per clip shall be between 2,100 and 3,000 lbs. with a total force range of 4,200 to 6,000 lbs. per rail seat.
6) The minimum static longitudinal slip per complete rail fastener assembly, with two clips shall be 3,000 lbs.
7) Field installation and removal of clips shall be accomplished by one man using standard track tools or by commercially available equipment.
8) Clip shall be proven design and produced by an ISO 9000 certified manufacturer with a minimum of ten years documented in-track experience in the United States.

D. Anchor Bolts

1. Anchor bolts shall be 7/8 inch diameter, heavy hex head structural bolts per ASTM A325, Type 3, with thread length per ASTM A449. Provide certification that bolts meet requirements of ASTM A325, Type 3.
2. Washer, hardened weathering steel, ASTM F436, 2” O.D., 0.94” I.D. and 1/8” thick, two per fastener body
3. Furnish 7/8-inch diameter anchor bolts of sufficient length to provide an acceptable length of insert thread engagement with 9/16 inch of vertical shims under the rail fastener.
4. All threaded elements in the fastener shall include a positive means of preventing the loosening of the element due to in-service vibrations.
5. Threaded element installation data shall include, but not be limited to, the bolt torque range in foot-pounds.
   a. The torque range shall provide the minimum clamping force of 25,000 lbs as specified by the fastener manufacturer’s installation procedures.
6. Coat all bolts with a water resistant coating as thread protection against rusting prior to installation.

E. Female Anchor Bolt Inserts

1. See Specification Section 34 11 12, Article 2.01.C.2 for insert requirements.

F. Fully Threaded Anchor Studs

1. See Specification Section 34 11 12, Article 2.01.C.1 for insert requirements including Exhibit 34 11 93 D.

G. Shims

1. Shims shall be 1/16th thick made of galvanized A26 steel; shall provide full bearing on the bottom of the fastener; and shall not be capable of displacement without complete removal of the anchor bolts.

2.03 VIBRATION ATTENUATING DIRECT FIXATION FASTENER (EGG TYPE)

A. The Vibration Attenuating Direct Fixation Fastener or egg-type fastener shall be manufactured by Advanced Track Products, Inc. (ATP), and previously supplied to WMATA or an approved equal.

B. In addition to being highly resilient, the fastener must provide:

1. Vertical and lateral stability to the rail
2. Longitudinal restraint to the rail
3. Electrically isolate the rail from the trackbed

4. Satisfactory service life comparable to that expected of standard direct fixation fasteners.

2.04 STANDARD DIRECT FIXATION FASTENER

A. The standard direct fixation fastener shall be the LB Foster F20L0 and Amsted SW-31 or approved equal meeting the requirements of these specifications.

2.05 STIFF DIRECT FIXATION FASTENER

A. The Stiff Direct Fixation Fastener System shall be LB Foster Model F30L0 or Amsted SW-31 (Approximate vertical spring rate of 300,000 lbs. /inch) or equal and, except for vertical spring rate, comply with all other requirements of this specification.

2.06 ZERO LONGITUDINAL RESTRAINT (ZRL) FASTENERS

A. Zero longitudinal restraint fasteners shall use the same fastener body as the Standard Direct Fixation Fastener except that the rail hold down feature of the top plate may be modified to accommodate ZLR components. Zero longitudinal restraint of the rail shall be achieved by incorporating into the fastener additional components and/or modifying the rail hold down spring clips. ZLR shall not be achieved through use of lubrication or other components that have the same effect as lubrication of the interface between the rail and fastener. Except for ZLR fasteners that have a history of successful performance, the ZLR fastener shall be subjected to the Push-Pull Test and comply with the acceptance criteria specified for the Push Pull Test.

PART 3 - EXECUTION

3.01 FIELD QUALITY CONTROL

A. Fastener Qualification Tests

1. General
   a. The qualification tests specified herein shall be performed by an independent testing facility approved by the WMATA Engineer and shall be a member of the American Council of Independent Laboratories. Qualification testing may be performed at any test facility, including such facilities at the contractor's plant, provided they meet the approval of the WMATA Engineer and satisfy the requirements of the American Council of Independent Laboratories “Manual of Practice, Quality Control System“ - Requirements for Testing and Inspection Laboratory. Testing equipment shall be in good repair, of adequate capacity and shall be accurately calibrated. Copies of calibration certificates shall be submitted to the WMATA Engineer. The WMATA Engineer shall be notified not less than 14 days in advance of dates scheduled for quality control tests. All testing shall be performed at no additional cost to WMATA and is to be performed post-award and prior to manufacture of production quantities. Previously approved and supplied product design meeting the requirements of this specification shall be exempt from the Qualification Testing. Production Testing as specified shall be performed.
   b. From a lot of not less than twenty standard direct fixation fasteners, sixteen will be selected at random by the WMATA Engineer. If additional fasteners are necessary to meet these test requirements they shall be furnished at no additional cost to WMATA.
   c. Prior to testing, the Contractor shall submit shop drawings detailing the rail fastener components and a detailed description of the steps required for its complete installation as well as the replacement of individual components. Upon approval by the WMATA Engineer

of the shop drawings and installation description, rail fasteners shall be fabricated for testing.

d. Before beginning any tests, a detailed description of all tests shall be submitted to the WMATA Engineer for approval. The description shall completely detail the test procedure and shall include drawings showing the relationship of the fastener and all significant components of the testing equipment, including the test block and anchor bolts.
e. Each of the fasteners selected for testing shall be carefully measured and examined to determine the compliance with these specifications and the approved shop drawings. Upon satisfactory completion of this examination eight fasteners will be retained by WMATA and the remaining eight fasteners shall be returned to the Contractor for execution of the Qualification Performance Tests by an independent laboratory.
f. Should any fastener assembly fail a test, perform the entire sequence of test on the eight new fastener assemblies. Should a fastener assembly from a sample lot fail a test, the entire lot is rejected and the Contractor is to provide a new random sample lot to the WMATA Engineer, from which a sample of eight fasteners will be returned to the Contractor for testing by the independent laboratory. If the design of the fastener must be modified to pass any test, shop drawings of the new design shall be submitted to and approved by the WMATA Engineer before retesting is continued. Manufacture at least ten fastener assemblies of the new design and perform all tests on the new fastener design. Continue the revision, approval and test cycle until the fastener assemblies are accepted. Four (4) weeks is allotted for redesign, approval, and testing commencement. WMATA reserves the right to terminate the contract for default should the Contractor fail to develop an approved fastener within a reasonable amount of time after award so as to prevent their capability of complying with the delivery schedule.

2. Elastomer Qualification Testing
   a. Each test listed below shall be performed on two specimens.
   b. The specimens used for the test shall be certified by the Contractor to have been taken from the production size batch used for making the fastener and to have cured in a manner equivalent to the cure used for the fastener.
   c. Prior to the testing, all elastomer specimens shall be conditioned for not less than two days at 23 degree C plus or minus 2 degree C and 50% plus or minus 5% relative humidity.
   d. Tests performed on specimens are:
      1) Hardness Test - The Durometer A hardness shall be between 45 and 55 as measured in accordance with ASTM D2240, “Indentation Hardness of Rubber and Plastics by Means of a Durometer”.
      2) Tensile Strength and Ultimate Elongation Test - When tested in accordance with ASTM D412, “Tension Testing of Vulcanized Rubber”, the tensile strength shall be 2,350 psi or greater and the ultimate elongation shall be 400 percent or greater.
      3) Compression Test - The elastomer shall be tested for 22 hours in accordance with ASTM D395, Method B to determine the percent of compression set. The test shall be conducted at 70 degree C. And the set shall not exceed 25 percent.
      4) Accelerated Aging of Rubber Test - In accordance with ASTM D573, “Accelerated Aging of Vulcanized Rubber“, the test sample shall be aged for 70 hours at 70 degree The percentage of decrease of tensile strength shall not exceed 25 percent; the percentage of decrease of ultimate elongation shall not exceed 25 percent; and the change in hardness, measured on the Durometer A scale, shall not exceed 10 points.
      5) Resistance to Ozone Cracking Test - Test specimens shall be prepared in accordance with Procedure A of ASTM D518, “Resistance to Surface Cracking of Stretched Rubber Components“. The test specimens shall be tested in accordance with ASTM D1149, “Accelerated Ozone Cracking of Vulcanized Rubber”, at a temperature of 40 degree C and at an ozone partial pressure of 50 mPa. The elastomer shall not exhibit any cracking when examined in accordance with ASTM D1149 at the end of a 100-hour exposure.
      6) Compression Set at Low Temperature Test - When tested at minus 10 degree C for 70 hours in accordance with ASTM D1229, “Low Temperature Compression Set of Vulcanized Elastomers”, the compression set at 30 minutes after release (t@30 reading) shall not exceed 37 percent.

7) Oil Absorption Test
   a) One test shall be conducted with IRM 903 (No. 3) oil at 23 degree C for 70 hours. The volume change for the No. 3 oil shall not exceed 100 percent for natural rubber.
   b) A second test using a different sample shall be conducted with IRM 903 (No. 1) oil at 23 degree C for 70 hours in accordance with ASTM D471, “Change in Properties of Elastomeric Vulcanizates Resulting from Immersion in Liquids“, to determine the volume change of the elastomer. The volume change for the No. 1 oil shall not exceed minus 10 percent or plus 20 percent for natural rubber.
8) Adhesion to Metal Test - This test shall be performed on specimens of elastomer which are to be bonded in the finished fastener in accordance with ASTM D429, Method A, “Adhesion of Vulcanized Rubber to Metal“, the failure must be entirely Type R (e.g. Elastomer tears before bond fails). The metal substrate, preparation, adhesive and bonding process shall be the same as that used for the manufacture of the direct fixation rail fastener.
9) Resistance to Tearing Test - When tested in accordance with ASTM D624, “Standard Test Method for Rubber Property - Tear Resistance”, the resistance to tearing shall be not less than 100 pounds per inch.
10) Flame Spread and Smoke Generation Test - The elastomer shall be tested in accordance with ASTM E162, “Standard Test Method for Surface Flammability of Materials Using a Radiant Heat Energy Source”, to determine the Flame Spread Index.
    a) The elastomer shall be tested in accordance with NFPA No. 258-1982, Smoke Generated by Solid Materials Test, in both the flaming and Nonflaming modes to determine the Smoke Generation Specific Optical Index, Ds. The elastomer shall not exhibit any flaming drippings when tested. No acceptance criteria are specified for the Flame Spread Index, Ls and the Smoke Generation Specific Optical Index, Ds. These indices shall be reported to WMATA for information only.
11) Electrical Resistivity Test – Tests shall be performed on an elastomer specimen and a fully assembled fastener.
    a) Apply 500 V dc. to the elastomer specimen for three minutes. The elastomer shall be tested and measured in accordance with ASTM D257 "Standard Test Method for D-C Resistance or Conductance of Insulating Materials", to determine the resistivity of the elastomer. Next, immerse the specimen in potable water for 70 hours at 70°C. Immediately after removal from the water immersion, without drying and with no portion of the specimen less than 35°C test it for electrical resistance and impedance. For testing under wet conditions, immerse elastomer in potable water with a resistivity of 1,000 to 1,500 ohm-cm. Adjust resistivity of potable water if required by addition of sodium chloride. The minimum volume resistivity under dry condition shall be 10^{12}-ohm-cm and 10^{11}_ ohm-cm under wet condition
    b) Refer to Article 3.03.B for Electrical Resistivity Tests on a fully assembled Fastener.
12) Water Absorption Test - The elastomer shall be tested in accordance with ASTM 0570, "Standard Test Method for Water Absorption of Plastics”, to determine the change in weight of elastomer due to absorption of water. Immerse specimens in distilled water for 24 hours at a temperature of 23 degree C prior to testing. The elastomer shall have a maximum increase in weight of 1.0 percent.
13) Rheology (Cure and Strength Indicator) Test
    a) Test the elastomer in accordance with ASTM D2196.
    b) During qualification testing a cure curve shall be developed based on the rheology test results for approval by the Contractor. Specification limits shall be established at several points along the curve for approval by the Contractor.
    c) During production testing the cure curves shall be compared to the qualification test cure curve. The production test curve shall be within the specification limits.
14) Specific Gravity Test
    a) Test the elastomer in accordance with ASTM D297.
    b) During the qualification testing the specific gravity of the elastomer shall be determined. During the production testing the specific gravity shall be plus or minus 0.02 of the specific gravity determined during the qualification testing.

3. Fastener Body Metal Testing
   a. Prepare three Charpy impact test specimens in accordance with ASTM E23, “Standard Method for Notched Bar Impact Testing of Metallic Materials“, from the same metal used for the top and bottom plates of the fastener body. Each metal sample shall have met the minimum impact requirements and be approved by the WMATA Engineer before fastener assembly qualification testing proceeds.
   b. Conduct a Charpy impact test on each specimen at a temperature of 21 degree C in accordance with ASTM E23. The fracture energy shall be greater than three foot-pounds. The test report shall include all the information required by ASTM E23. The fracture energy shall be greater than 3 foot-pounds for irons and 15 foot-pounds for steel.
   c. High Frequency Resonance Test
      1) Suspend the top plate with nylon, hemp, polyethylene or cotton rope, or an elastomer band of sufficient strength to support the top plate without failure. Mount an accelerometer of mass not greater than 0.05 kg at the center of the rail seat area, with an axis of sensitivity normal to the rail seat. The accelerometer signal shall be appropriately conditioned with a charge amplifier or voltage preamplifier and analyzed with a minimum 400 line spectrum analyzer, while striking an end of the top plate with a hammer in a direction normal to the rail seat plane.
      2) The frequencies of the top plate’s modes of vibration, identified by maxima in the spectrum of the response of the top plate to hammer impacts, shall be greater than 600 Hz.
   d. Corrosion Process: Reference Article 3.04 F
   e. Heat Aging Process: Reference Article 3.04 G

4. Fastener Assembly Testing
   a. Perform the following rail fastener testing at no additional cost to WMATA using the test procedures as prescribed herein.
      1) Static Tests (**Exhibit E**):
         a) Loads, as described in the tests, are per fastener and shall be doubled during performance of each test.
         b) Vertical Load Test: Perform testing in accordance with Article 3.02.A herein.
         c) Lateral Load Test: Perform testing in accordance with Article 3.02.C herein.
         d) Vertical Uplift Test: Perform testing in accordance with Article 3.02.B herein.
         e) Longitudinal Restraint Test: Perform testing in accordance with Article 3.02.E herein.
         f) Lateral Restraint Test: Perform testing in accordance with Article 3.02.D herein.
      2) Electric Tests: Perform all tests on single fasteners.
         a) Voltage Withstand Test: Perform testing in accordance with Article 3.03.A herein.
         b) Electrical Resistance and Impedance Tests: Perform testing in accordance with Article 3.03.B herein.
         c) Electrical Impedance Test: Perform testing in accordance with Article 3.03.C
      3) Life Cycle Tests (Dynamic): Use a separate fastener for each test.
         a) Dynamic to Static Stiffness Ratio Test: Perform testing in accordance with Article 3.04.E herein.
         b) Loads, as described in the tests, are per fastener and shall be doubled during performance of each test.
         c) Vertical and Lateral Repeated Load Test: Perform testing in accordance with Article 3.04.A herein.
         d) Repeated Load Test with One Anchor Bolt: Perform testing in accordance with Article 3.04.B
         e) Uplift Repeated Load Test: Perform testing in accordance with Article 3.04.C
         f) Push-Pull Test: Perform testing in accordance with Article 3.04.D
         g) Corrosion Process: See Article 3.04 F
         h) Heat Aging Process: See Article 3.04 G
      4) Anchorage Assembly Tests:
         a) Restrained Pull-Out Test: Perform testing in accordance with Article 3.05.A & 3.05 B

b) Unrestrained Pull-Out Test: Perform testing in accordance with Article 3.05.A & 3.05 B
c) Torsional Test: Perform testing in accordance with Article 3.0.5C

b. Temperature
1) Before commencing, and during all tests, the fastener shall be stabilized at an ambient temperature of 22 degrees C, plus or minus 5 degrees C unless otherwise specified

c. Testing Plan
1) Tests specified herein shall be performed in accordance with the approved test plan.
2) The Contractor shall notify the WMATA Engineer fourteen days in advance of the commencement of testing including preparation of the test equipment for testing.
3) Testing shall be performed in the presence of the WMATA Engineer unless otherwise approved in writing by the WMATA Engineer.

d. Test Set-Up and Preparation
1) Except as otherwise specific herein, each test shall be performed on two completely assembled rail fasteners at 30-inch center to center spacing, with a section of 115RE rail not less than 42 inches long. The rail loading and measuring points shall be as specified for each test and as shown on **Exhibit C**.
2) The fastener shall be assembled as shown in the approved shop drawings and installation description, and all threaded elements shall be tensioned as specified. The test fasteners shall be mounted on a concrete test block and anchored with 7/8 inch diameter ASTM A325, “Standard Specifications for Structural Bolts, Steel, Heat Treated, 120/105 ksi Minimum Tensile Strength”, threaded stud bolts to simulate field installation. The anchorage shall not fail under loadings imposed by any test specified below.
3) Except for specific tests noted herein, eight fasteners complete with the modified rail section as shown in **Exhibit A** and of length as determined shall be used.
4) Before assembly, the fasteners shall be clean and dry.
5) The fasteners shall be spaced one inch apart.
6) The fasteners shall be mounted and anchored on a test block and the spring clips shall be positioned to hold the rail section.
7) The anchor bolts shall be torqued to 300 foot-pounds.
8) All reactions to load shall be through the fasteners to the test block.
9) The test block shall be of reinforced concrete with female threaded inserts cast or set on it to receive the 7/8-inch fastener anchor bolts. The top surface of the test block shall be a flat plane with a wood float finish and with the face of the inserts set parallel to the surface with a tolerance of plus zero above and minus 1/32-inch below the surface.
a) Concrete: The shall have a minimum 28 day strength of 4,000 pounds per square inch as determined from standard test specimens taken in accordance with ASTM C31 and ASTM C172 and cured and tested in accordance with ASTM C39.
b) The reinforcing steel shall be epoxy coated Grade 60 per ASTM A615, “Standard Specifications for Deformed and Plain Billet Steel Bars for Concrete Reinforcement” and shall be placed as shown in **Exhibit D.**
c) Inserts:
i. Two pairs of threaded stud bolts shall be drilled and epoxied into the concrete test block.
ii. The stud bolts shall project 3-1/2 inches out from the top surface of the concrete.
iii. The stud bolts shall be positioned as they would be in track for two fasteners 30 inches apart measured parallel to the rail.
iv. The holes for the dowels shall be 1-1/8 to 1-3/4 inch diameter and 5-1/2 inches deep.
v. The epoxy to be used shall provide minimum unrestrained pullout strength of 20,000 pounds. As an alternate, the stud bolts may be replaced with 7/8 inch anchor bolts and female inserts epoxy grouted into the concrete block.
vi. Inserts shall be of corrosion resistant steel threaded to 1-1/2 inch depth to receive ASTM A325 7/8-inch bolts and shall meet 40,000-pound bolt load.

vii. Washer face bearing of the insert against the fastener shall be equal to the bearing area of an A563 heavy nut for 7/8-inch bolt.

viii. Length and anchorage configuration shall withstand 12,000 pounds unrestrained pullout and resist 250 foot-pounds torque without yielding. Inserts shall be coated with an epoxy resin insulating coating, 100-percent dry powder epoxy resins, Scotch Kote Brand Protective Resins No. 203, Minnesota Mining and Manufacturing Company; Corvel Epoxy ECB-1363A, Polymer Corporation; or equal.

e. Instrumentation
   1) Instrumentation for all required deflection and rotation measurements shall be designed so as to measure each rail motion parameter relative to the test block.
   2) Each instrument shall be designed to measure the motion intended with minimum effects on the data from other motions.

f. Test Sequence:
   1) Eight (8) complete rail fastener assemblies are required to conduct the tests. Assemble and mount two fasteners on each concrete block designated as A, B, C, and D. The set of fasteners shall be subjected to the following tests as specified above.
   2) Fasteners A shall undergo the Vertical and Lateral Repeated Load Test and then undergo the Repeated Load Test with One Anchor Bolt. Fasteners A shall then again undergo each Static Test without replacement of any component. For the Longitudinal Restraint Test, the fasteners shall not be disassembled from the rail after the Repeated Load Test with One Anchor Bolt, nor shall the rail hold down assemblies be re-torqued.
   3) Fastener B shall be subjected to Dynamic to Static Stiffness Ratio Test, then undergo Heat Aging Process, and then retested through each of the Static Tests without replacement of any component followed by another Dynamic to Static Stiffness Ratio Test.
   4) Fasteners C shall undergo Heat Aging Process and then tested for Uplift Repeated Load Test followed by Corrosion Process. Fasteners C shall then be retested through each of the Static Tests without replacement of any component.
   5) Fasteners D shall be tested as specified for the Push-Pull Test. Fasteners D shall then be retested through each of the tests for Static Tests, without replacement of any component. For the Longitudinal Restraint Test, the fasteners shall not be disassembled from the rail after the Push-Pull Test, nor shall the rail hold down assemblies be re-torqued.
   6) The qualification testing sequence described above is graphically shown on **Exhibit 34 11 36.13 E.**
   7) The sequence shall be performed without replacement of any fastener component.

g. Starting Tests and Procedures
   1) After a test sequence is begun, it shall be completed.
   2) In the event of failure of a test rig component, the WMATA Engineer shall determine if the failure was attributable to the fastener.
   3) If the fastener did contribute to the failure, or if there is doubt, then, with the approval of the WMATA Engineer, the testing shall cease and the test report shall be submitted with all findings.

B. Production Quality Control Testing

1. General
   a. Following successful completion of the qualification tests, acceptance of the qualification test reports by the WMATA Engineer, and start of the fastener assembly manufacturing, Production type quality control sampling and testing shall be conducted and performed by an independent testing facility approved by the WMATA Engineer and shall be a member of the American Council of Independent Laboratories.
   b. Elastomer samples and fastener assemblies shall be selected from regular production and subjected to testing to ensure that high quality standards are maintained and that design requirements set forth in these specifications are met through the completion of the production process.

2. Production Elastomer Tests
   a. Samples of elastomer from every mixed batch of material used in the manufacture of production fastener shall be tested to verify compliance of the elastomer batch mix with the following testing requirements:
      1) Hardness Test,
      2) Tensile Strength and Ultimate Elongation Test,
      3) Specific gravity, and
      4) Cure Characteristic in accordance with ASTM D2084 or an equivalent industry accepted standard.
   b. Certificate of Compliance from the supplier of the elastomer shall be submitted to the Engineer guaranteeing compliance of the elastomer with requirements of these specifications.

3. Fastener Assembly Tests
   a. Production quality control testing of fasteners shall be performed on two (2) fasteners from the first 50 fasteners and on two (2) fasteners from each production lot. A production lot is defined as a quantity of manufactured and completed fasteners produced in a continuous run, but not to exceed 5,000 units. As requested, fasteners may be selected for testing by the WMATA Engineer. Permanently mark the fasteners used for production testing and meeting all test requirements as production test fasteners and deliver fasteners to WMATA. These fasteners shall be subjected to the following tests:
      1) Vertical Load Test
      2) Vertical Uplift Test
      3) Lateral Load Test
      4) Lateral Restraint Test
      5) Longitudinal Restraint Test
      6) Voltage Withstand Test
      7) Electrical Resistance Test
      8) Vertical and Lateral Repeated Load Test (500,000 cycles)
   b. The configuration for testing and the acceptance criteria shall be as specified above, and the value obtained for the slope of the load-deflection curve in the Vertical load Test shall be within 20 percent of that obtained in the original compliance testing.
   c. The quality control tests shall commence no later than fourteen days after fabrication of the fastener. Should any fastener fail to meet the test requirements, two additional fasteners from that same production lot shall be tested. In the event any of the two additional fasteners fail, 100 percent of the remainder of the lot shall be rejected or tested and only those successfully passing all tests shall be incorporated in the final delivered quantity.
   d. In addition to the quality control tests and at the discretion of the WMATA Engineer, all components of the rail fasteners shall be subjected to full or partial testing for compliance with these specifications. The cost of all such additional testing required by the WMATA Engineer for any component that is proved to comply with these specifications will be at the expense of the WMATA. The cost of all such additional testing of any component that is proven not to comply with these specifications shall be at no expense to the WMATA.
   e. Production quality control testing may be performed at any test facility, including such facilities at the contractor's plant, provided they meet the approval of the WMATA Engineer and satisfies the requirements of the American Council of Independent Laboratories “Manual of Practice, Quality Control System" - Requirements for Testing and Inspection Laboratory, and ASTM E320. Testing equipment shall be in good repair, of adequate capacity and shall be accurately calibrated. Copies of calibration certificates shall be submitted to the WMATA Engineer. The WMATA Engineer shall be notified not less than 14 days in advance of dates scheduled for quality control tests.
   f. Two copies of the results of all tests shall be submitted to the WMATA Engineer within seven days after performance of the tests.

4. Acceptance - Final acceptance of production lots of direct fixation rail fasteners will be based upon the fastener and all its components complying with these specifications as determined by the WMATA Engineer, based on the results of the quality control tests and the certified statements submitted to the WMATA Engineer by the Contractor.

3.02 STATIC TESTS

A. Vertical Load Test

1. Procedures
   a. A vertical load increasing in increments of 2,000 pounds to a maximum load of 32,000 pounds shall be applied downward at the center of the rail head midway between the two fasteners and normal to the rail.
   b. The load shall be applied at the rate of not less than 200 pounds per minute not more than 2000 pounds per minute.
   c. For each increment of load the vertical deflection of the rail head shall be measured to the nearest 0.001 inch and recorded.
   d. The load shall be removed and the final position of the rail head measured and recorded. The recorded values for vertical load vs. deflection shall be plotted on a graph as shown on **Exhibit F**.
2. Acceptance Criteria
   a. Calculate the fastener stiffness as the slope of a straight line determined by a linear least-squares regression of the load per fastener versus each deflection for load per fastener between 4,000 pounds and 12,000 pounds. The fastener stiffness shall be within 15 percent of 140,000 pounds per inch. The load versus displacement curve shall be within the limits identified in **Exhibit F**.
   b. The tangent to load-versus-deflection curve at each load between and including 4,000 pounds and 12,000 pounds per fastener shall be within 20 percent of the fastener stiffness determined above. For the purpose of calculation, the tangent to the load versus deflection curve at each deflection, X_n , and each load , P_n, are approximated as:

      $$(P_{n+1} - P_{n-1})/(X_{n+1} - X_{n-1})$$

      Where P is the load at deflection X_n

   c. Total deflection of the elastomer at the 15,000 pound load per fastener shall not exceed 25 percent of the uncompressed thickness. After removal of the maximum load, the fastener shall return to within 0.005 inch of its original position within one minute.
   d. At no time during the tests shall a fastener component exhibit any sign of failure by slippage, yielding, fracture, or bond failure.
   e. Values obtained when this test is repeated, after performance of other tests, shall be within 20 percent of the initial test values.

B. Vertical Uplift Test

1. Procedures
   a. A vertical load shall be applied to the center of the rail head midway between the two fasteners and normal to the rail, alternating from a vertical downward load to a vertical upward load.
   b. The peak load per cycle shall be increased in increments of 200 pounds each cycle to 4,800 pounds.
   c. The loads and deflections shall be continually measured to the nearest 0.001 inch and simultaneously recorded on a load versus time graph and a deflection versus time graph respectively.
   d. The load shall be removed and the final position of the rail head measured and recorded. The reaction force to the uplift load shall be applied to the test block on which the fastener is mounted.
2. Acceptance Criteria
   a. The ratio of the deflection for the total uplift test load to the deflection for the total vertical downward test load shall be between plus 5 percent and plus 135 percent of the deflection for a 4,000 pound downward vertical load as determined from the Vertical Load Test.

b. When the vertical load is continuously varied from vertical downward loads to uplift loads, there shall be no indication of backlash or free play at times when the load or the deflection changes direction.
c. After removal of the maximum load, the rail shall immediately return to within 0.005 inch of its original position.
d. At no time during the test shall any fastener component, including the anchorage to the test block, exhibit any sign of failure by slippage, yielding or fracture.

C. Lateral Load Test

1. Procedures
   a. While applying a vertical load of 27,000 pounds downward at the center of the rail head midway between the two fasteners and normal to the rail, a lateral load, increasing in increments of 1,000 pounds to a maximum load of 16,000 pounds, at a rate of 1,000 pounds per minute, shall be applied horizontally to the rail head at a point 0.625 inch below the top of rail at the location of vertical load.
   b. For each load increment, the lateral deflection of the rail head at a point 0.625 inch below the top of rail shall be measured to the nearest 0.001 inch and recorded.
   c. The lateral load shall be removed and the final position of the rail head measured and recorded.
   d. The recorded values for lateral load vs. deflection shall be plotted on a graph similar to **Figure G**.
2. Acceptance Criteria
   a. The lateral load versus deflection curve for each fastener shall lie within the envelope shown on **Exhibit G**.
   b. The lateral deflection of the rail head for a lateral load of 4,000 pounds per fastener shall not exceed 0.150 inch.
   c. The average lateral deflection at maximum load shall not exceed 0.336 inch.
   d. After removal of the load, the difference between the original and final positions of the gauge line shall not exceed 0.062 inch. At no time during the test shall any fastener component exhibit any sign of failure by slippage, yielding or fracture.

D. Lateral Restraint Test

1. Procedures
   a. A lateral load increasing in increments of 1,000 pounds from zero pounds to 10,000 pounds shall be applied normal to the rail at the base of rail midway between the two fasteners.
   b. The lateral deflection of the rail shall be measured at the intersection of the centerline of the fastener and the gauge line of the rail to the nearest 0.001 inch and recorded after each increment of loading.
2. Acceptance Criteria
   a. At no time during the test shall any component of the fastener show signs of slippage, yielding, or fracture.
   b. The difference between the original and final positions of the gauge line shall not exceed 0.062 inch.
   c. The lateral deflection of the rail when fully loaded shall not exceed 0.125 inches from original gauge line of the rail.

E. Longitudinal Restraint Test

1. Procedures
   a. During the longitudinal restraint test, the rail ends shall be supported on a roller or other low friction supports, properly elevated to prevent the longitudinal load from binding the rail in the fastener.
   b. A load shall be applied longitudinally at the centerline of rail at the base of the rail increasing in increments of 500 pounds up to a total of 7,000 pounds or until the rail deflects 0.6 inch from the initial condition, whichever occur first.

c. The rate at which load is applied shall be approximately 1,000 pounds per minute. Each load increment shall be maintained constant at a minimum of 30 seconds or until the longitudinal deflection of the rail ceases before increasing the load to the next increment.
d. For each load the longitudinal deflection of the rail relative to the fastener shall be measured to the nearest 0.001 inch and recorded. The longitudinal load shall be removed at slippage of rail and the final position of the rail measured and recorded.
e. The recorded values for longitudinal load vs. deflection shall be plotted on a graph as shown on **Exhibit H**.

2. Acceptance Criteria
   a. The longitudinal load vs. deflection curve, when plotted on **Exhibit H**, shall lie entirely within the shaded area.
   b. The difference between the original and final positions of the rail shall not exceed 0.125 inch plus the slippage distance of the rail.
   c. At no time during the test shall any fastener component exhibit any sign of failure by slippage, yielding, bond failures or fracture except that slippage which may occur between the rail clip and the rail.

3.03 ELECTRICAL TESTS

A. Voltage Withstand Test

1. Procedures
   a. Prepare a fully assembled fastener and apply a DC potential of 15KV between the rail head and the metal base plate of the fastener body for one minute.

2. Acceptance Criteria
   a. The elastomer shall withstand this test with no visible damage such as splits, cracks, pinholes or fractures, and no evidence of arcing, arc tracking, or other voltage breakdown.

B. Electrical Resistance Test

1. Procedures
   a. Test a complete, fully assembled fastener for electrical resistance, using both the wet and dry conditions procedures as specified herein.
   b. Before assembly, metal parts, anchoring devices, rail clips, elastomer surfaces, and all other ancillary parts associated with the fastener shall be clean and dry.
   c. Assemble the fastener with a section of 115-pound RE rail, not less than 1 foot in length.
   d. Mount a completely assembled fastener on 1/4 inch thick metallic ground plate sized to extend ½ inch beyond all edges of the fastener.
   e. Use anchorage assemblies supplied, or similar to those for use in actual field installation, to mount the fastener to the ground plate.
   f. Use the same number of bolts (or other device) that will be used to anchor the fastener in-service.
   g. Verify that improper assembly and other causes do not make the parts that are in electrical contact exhibit excessive contact resistance; including, but not necessarily limited to, the following contact points:
      1) Rail-to-rail plate interface.
      2) Rail hold-down assembly (clip) and rail.
      3) Anchor bolts and bottom fastener plate (if present).
      4) Anchor bolts and ground plate.
   h. Dry Resistance Test
      1) Procedures
         a) 24 hours prior to testing, store the assembled fastener in a clean, dry environment with ambient temperature of 60F to 80F and 50 to 70 percent humidity.
         b) Apply 100 volts DC between the rail head and the ground plate for three minutes.
         c) Measure the applied voltage and the resulting current flow, or directly measure the resistance with an accuracy of plus or minus two percent.

2) Acceptance Criteria
   a) The minimum resistance for 100 volts DC is 20 megohms.

i. Wet Resistance Test
   1) Procedures
      a) Perform this test on the same fastener that passed the Dry Resistance Test. Place the assembled fastener in a nonmetallic trough or suitable container.
      b) Size the container such that there is a minimum of two inches between the sides and bottom of the fastener/ground plate assembly and sides and bottom of the container.
      c) Pour water into the container to a level midway up to the rail web covering all surfaces of the fastener.
      d) Maintain this level of immersion for 10 minutes. The water resistivity shall be 1,000 to 1,500 ohm-cm (use potable water and adjust resistivity by addition of sodium chloride).
      e) Ambient temperature of fastener surfaces (prior to immersion), water, and air shall be 60 to 80 degrees Fahrenheit.
      f) Relative humidity shall be 50 to 70 percent.
      g) Drain water from container to a level ½ inch below the ground plate, and without drying or otherwise disturbing the fastener, apply 100 volts DC to the rail head and ground plate and calculate the resistance within 15 seconds. Repeat measurement and calculation every five minutes for the first hour and every ten minutes for the second hour.
   2) Acceptance Criteria
      a) The minimum resistance for 100 volts DC is one megohms for the average of three consecutive readings within two hours after draining.
      b) The difference between each of the three readings and the average reading shall not exceed 10 percent of the average reading.

C. Electrical Impedance Tests

1. Procedures
   a. On a fully assembled fastener, apply a potential of 50 volts AC to the rail head for three minutes for each increment of measurement for frequencies from 20Hz to 10kHz, in increments of 20Hz up to 100 Hz, 200 Hz to 1,000 Hz, and 2,000 Hz up to 10kHz.
   b. Measure the impedance after three minutes with an accuracy of plus or minus two percent and record for each frequency.
2. Acceptance Criteria
   a. The minimum impedance for any frequency between 100 hz through 10 khz shall not be less than 9,500 ohms.

3.04 LIFE CYCLE TESTS

A. Vertical and Lateral Repeated Load Test

1. Procedures
   a. Loads shall be applied to the rail head in such a manner as to produce a vertical downward load of 28,000 pounds, and lateral loads midway between the two fasteners, 0.625 inch below top of rail, of 8,000 pounds to the gauge side of the rail head and 5,000 pounds to the field side of the rail head.
   b. The application of the lateral loads shall be alternated, each combined with alternate application and release of the vertical load, a total of three million complete cycles. Application of the field side load and then the gauge side load with two applications of the vertical load constitutes one cycle.
   c. The frequency shall be regulated to prevent the temperature of the components from exceeding 70 degree C. Re-torqueing of threaded elements subsequent to the completion

of 500,000 cycles of loading will not be permitted without the written approval of the WMATA Engineer.

2. Acceptance Criteria
   a. The fastener shall withstand the three million cycles of load application with no evidence of failure by slippage, yielding, wear, grooving or fracture at any time during the test.

B. Repeated Load Test with One Anchor Bolt

1. Procedures
   a. After completion of the Vertical and Lateral Repeated Load Test, the fastener shall be reassembled as specified using only the original components previously subjected to testing.
   b. The Vertical and Lateral Repeated Load Test shall then be repeated with a minimum of 15,000 cycles with the gauge side anchor bolt loosened to a minimum of 1/4 inch gap.
2. Acceptance Criteria
   a. The fastener and concrete block shall withstand the 15,000 cycles of loading with the gauge side anchor bolt loosened with no evidence of failure by slippage, yielding or fracture.

C. Uplift Repeated Load Test

1. Procedures
   a. The rail fasteners, fully assembled as specified above, shall have loads applied to the rail head in such a manner as to produce alternating vertical downward load of 20,800 pounds and a vertical upward load of 4,800 pounds at the centerline of the rail and midway between the two fasteners normal to the rail.
   b. The application of the two vertical loads shall constitute one complete cycle and shall be applied for a minimum of 1.5 million cycles.
   c. The frequency shall be regulated to prevent the components' temperature from exceeding 70 degree C.
   d. Re-torqueing threaded elements subsequent to completion of 500,000 cycles of loading will not be permitted.
2. Acceptance Criteria
   a. The fastener shall withstand 1.5 million complete cycles of load application with no evidence of failure.
   b. Upon visual inspection, no component of the fastener, shall exhibit any evidence of failure by yielding, slippage or fracture.
   c. The rail shall exhibit no evidence of wear of grooving that would contribute to a failure of the rail under operating conditions.

D. Push-Pull Test

1. Procedures
   a. During the Push-Pull Test, the rail ends shall be supported on rollers or other low friction supports, properly elevated to prevent the longitudinal load from binding the rail in the fasteners.
   b. A cycling longitudinal load shall be applied to the centroid of the rail at one end to deflect the rail plus and minus 3/4 inch about the initial position for a total of 50 cycles.
   c. Immediately afterward, a cycling load equal to 80% of the ultimate slippage loads as recorded in the longitudinal restraint test shall be applied for a total of 25,000 pushing and pulling cycles.
   d. Repositioning of the rail clips at any time will not be permitted.
2. Acceptance Criteria
   a. The fastener shall withstand 25,000 cycles of loading with no evidence of failure.
   b. Upon visual examination, no component of the fastener, shall exhibit any evidence of failure by yielding slippage or fracture, except that slippage may occur between rail clips and rail but not between rail clips and the fastener body.

c. The rail shall exhibit no evidence of wear or grooving that would contribute to rail failure under operating conditions.
d. For ZLR fasteners the 25,000 cycles of loading shall require a load of less than 300 lbs. to cause the rail to slip thru the ZLR fastener.

E. Dynamic to Static Stiffness Ratio Test

1. Procedures
   a. Using the same assemblage as noted in the Vertical Load Test, Apply an oscillating downward load at the centerline of the rail head and the centerline of the fastener so as to produce a sinusoidal load alternating between 8,000 and 18,000 pounds at a rate of between 10 and 20 hertz.
   b. Continuously record the load and deflection versus time on a high speed oscillograph or high speed digital recorder.
   c. After a minimum of 1,000 cycles, determine the dynamic stiffness from the ratio of peak-to-trough force to peak-to-trough deflection from the recorded data.
   d. Between five to ten minutes after completion of the dynamic stiffness measurement and removal of all load, apply a vertical load beginning at zero pounds and increasing in 2,000 pound increments to a maximum of 20,000 pounds, at a rate not less than 200 pounds per minute nor more than 2,000 pounds per minute, at the centerline of the fastener assembly.
   e. For each increment of load between 2,000 and 20,000 pounds, record the vertical deflection of the rail head to the nearest 0.001 inch.
   f. The static stiffness of the fastener shall be the difference in load divided by the difference in deflection between 8,000 and 18,000 pounds.
2. Acceptance Criteria
   a. The dynamic stiffness shall not exceed 1.5 times the static stiffness.

F. Corrosion Process

1. Procedures: Expose the fastener body, without loose components, to a five percent solution in accordance with ASTM B117, “Standard Test Method for Salt Spray (Fog) Testing”, for 500 hours.
2. Acceptance Criteria
   a. This is a conditioning process for the fasteners that will be further tested as indicated in **Exhibit E.**

G. Heat Aging Process

1. Procedures: Fully assemble a fastener as specified above except the anchor bolts need not be installed and age the fastener in an air oven for a period of 166 hours at a temperature of 70 degree C using the aging methods specified in ASTM Designation D573, "Accelerated Aging of Vulcanized Rubber by the Oven Method".
2. Acceptance Criteria
   a. This is a conditioning process for the fasteners that will be further tested as indicated in **Exhibit E**.

3.05 ANCHORAGE ASSEMBLY TESTS

A. Fastener Anchor Bolt Insert Pull-Out Test

1. Inserts shall be installed according to the work plan in each of two areas of existing concrete trackbed exhibiting different invert conditions as directed by the Engineer. The sites selected and witnessed by the Engineer will be chosen to demonstrate the temperature and wetness limits of the anchoring material.
2. A restrained test shall be performed in each area, in which a 3-1/2 inch square by 1/2 inch thick steel plate, with a 0.9687 inch diameter hole in the center shall be placed over insert on the

concrete trackbed. The insert bolt shall be installed and then have an upward vertical load applied, bearing against the steel plate, until a load of 40,000 pounds occurs. The load shall then be released. Six inserts and bolts in each area shall be tested in this manner.

3. For the unrestrained test, the steel plate shall be removed. The insert bolt shall again have an upward vertical load applied, in such a manner that no vertical load is applied to the concrete trackbed within a radius of six inches from the insert until a load of 6,000 pounds is attained.
4. Testing shall be no additional cost to WMATA.
5. Acceptance Criteria for Insert Pull-Out Testing
   a. During the restrained test there shall be no evidence of failure of the insert anchoring system before a load of 40,000 pounds is attained.
   b. During unrestrained test there shall be no evidence of failure by slippage or cracking of the insert anchoring material before a load of 6,000 pounds is attained.

B. Anchor Stud Pull-Out Test

1. Fully Threaded Anchor Studs shall be installed according to the work plan in each of two areas of existing concrete trackbed exhibiting different invert conditions as directed by the Engineer. The sites selected and witnessed by the Engineer will be chosen to demonstrate the temperature and wetness limits of the anchoring material.
2. A restrained test shall be performed in each area, in which a 3-1/2 inch square by 1/2 inch thick steel plate, with a 0.9687 inch diameter hole in the center shall be placed over insert on the concrete trackbed. The fully threaded anchor stud shall be installed and then have an upward vertical load applied, bearing against the steel plate, until a load of 20,000 pounds occurs. The load shall then be released. Six inserts and bolts in each area shall be tested in this manner.
3. For the unrestrained test, the steel plate shall be removed. The fully threaded anchor stud shall again have an upward vertical load applied, in such a manner that no vertical load is applied to the concrete trackbed within a radius of six inches from the insert until a load of 14,000 pounds is attained.
4. Testing shall be no additional cost to WMATA.
5. Acceptance Criteria for Fully Threaded Anchor Stud Pull-Out Testing
   a. During the restrained test there shall be no evidence of failure of the fully threaded anchoring system before a load of 20,000 pounds is attained.
   b. During unrestrained test there shall be no evidence of failure by slippage or cracking of the anchor stud anchoring material before a load of 14,000 pounds is attained.

C. Torsion Test

1. Procedures
   a. Subject an anchor bolt to a torque of 600 foot-pounds.
   b. Hold the load for three minutes and release.
   c. Repeat test on one other anchor bolt.
2. Acceptance Criteria
   a. No evidence of failure of the bond between inserts and concrete on either of the two anchor bolts.

3.06 DIRECT FIXATION MOLDING REQUIREMENTS

A. Contractor's name or trademark shall be molded into the elastomer.

B. Each cavity in a mold shall have a cavity identification mark which is molded into the elastomer. If more than one mold is used, then each cavity in a mold shall have a mold identification mark which is molded into the elastomer.

C. Each molding cycle which produces one or less fasteners from each cavity in a mold is a heat.

D. Consecutive heats from a mold shall be numbered consecutively.

E. The elastomer's production batch number and the heat number shall be marked on each fastener in a permanent manner. The marking shall be visible in the installed position.

F. The location and method of marking of identification data shall be shown on a shop drawing.

G. In an orderly manner, each mold/heat/cavity permutation shall be assigned a unique sequential part number and part numbers shall be assigned to lots.

H. A tabulation of lot, part, batch, mold, heat and cavity shall be developed as part of the Quality Assurance Program.

3.07 MANUFACTURING TOLERANCES

A. Manufacturing tolerances for the fastener shall be as shown in Table 1.

Table 1 - Direct Fixation Fastener Manufacturing Tolerances

DIMENSION	TOLERANCE
Length and width	Plus or minus 1/8 inch
Height	Plus or minus 1/32 inch
Squareness	All angles within plus or minus 1/32 inch
Centering of holes	Plus or minus 1/32 inch
Diameter of holes	Plus or minus 1/32 inch
Durometer Shore A	Plus or minus 5
Serration depth	Plus or minus 1/64 inch
Serration spacing	Plus or minus 1/64 inch
Width between shoulders at rail base	Plus 1/16 inch or minus zero inch

EXHIBIT A

FASTENER CLEARANCE ENVELOPE DIRECT FIXATION RAIL FASTENERS

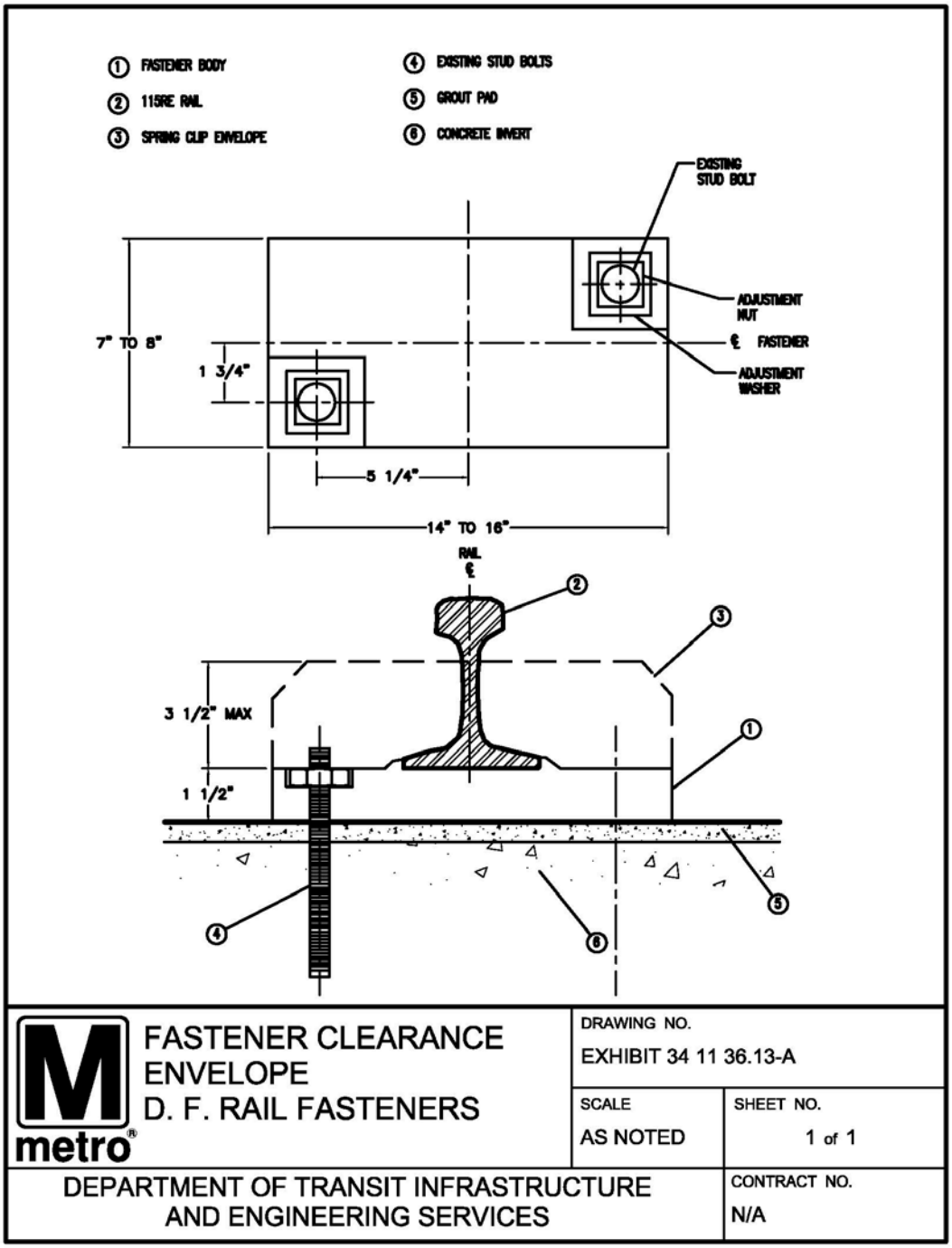

EXHIBIT B

RESTRICTED AREA DURING INSTALLATION AND MAINTENANCE

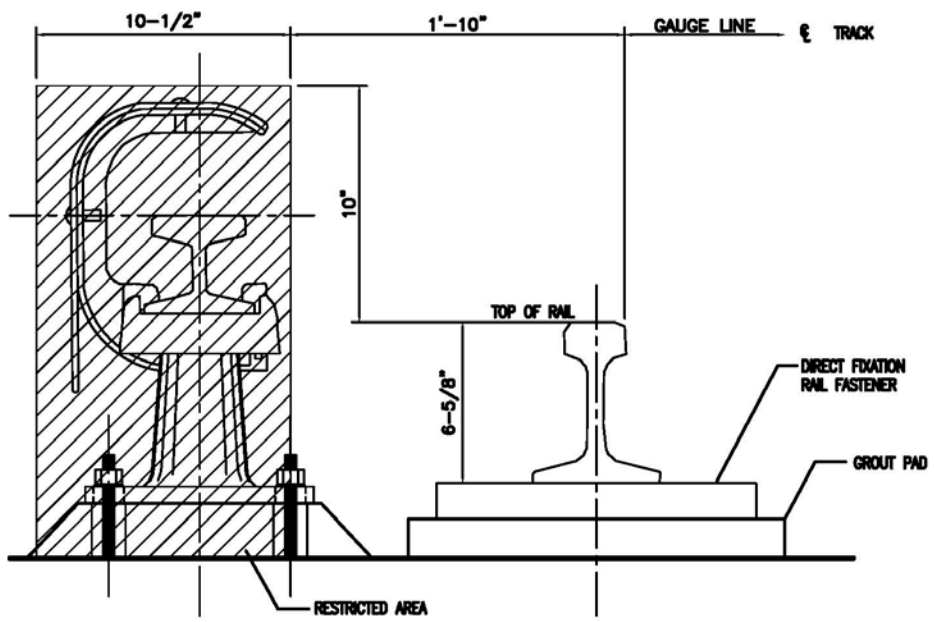

metro® RESTRICTED AREA DURING INSTALLATION AND MAINTENANCE	DRAWING NO. EXHIBIT 34 11 36.13-B	
	SCALE AS NOTED	SHEET NO. 1 of 1
DEPARTMENT OF TRANSIT INFRASTRUCTURE AND ENGINEERING SERVICES		CONTRACT NO. N/A

EXHIBIT C

MODIFIED RAIL SECTION

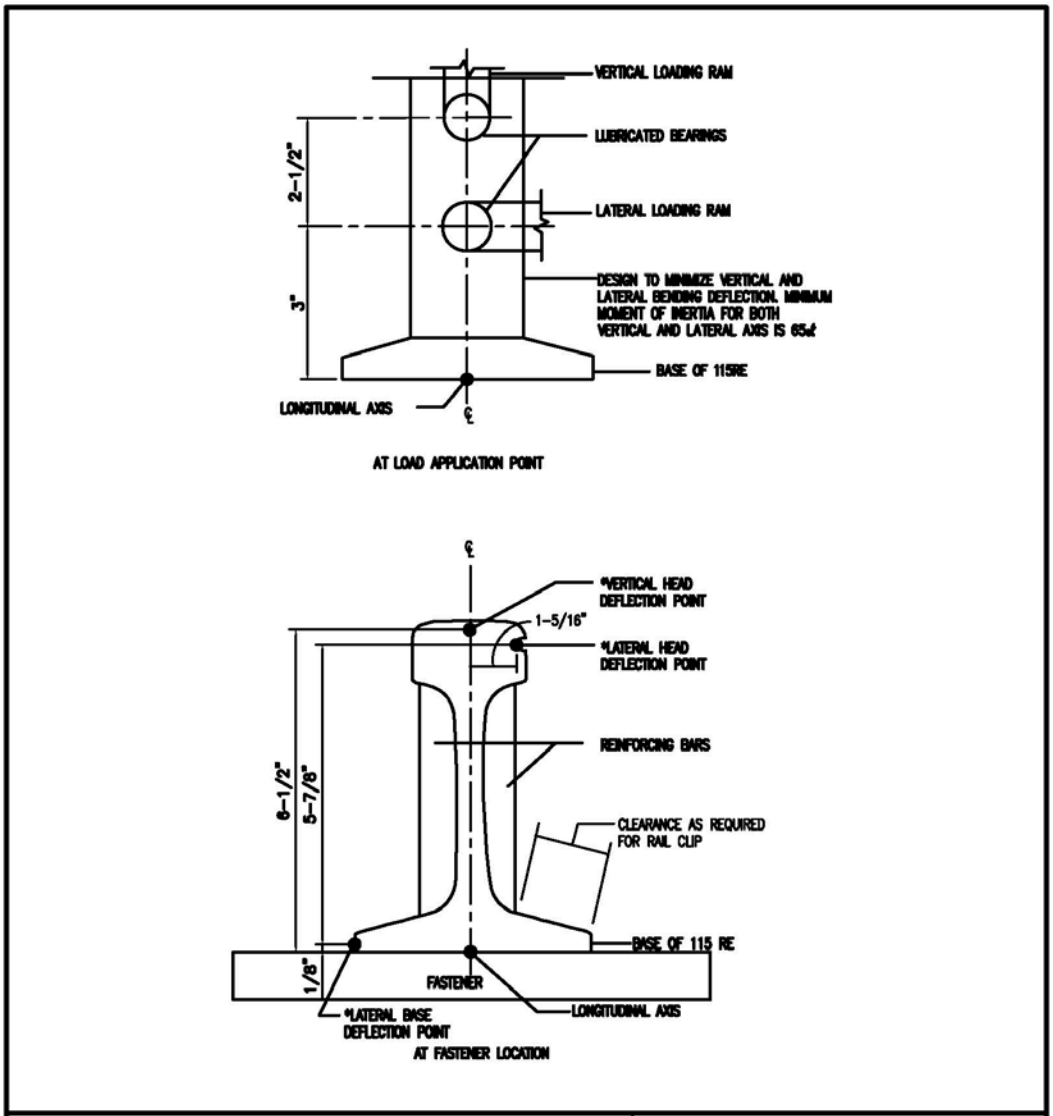

EXHIBIT D

CONCRETE TEST BLOCK FOR TESTING ANCHOR ASSEMBLIES FOR DIRECT FIXATION FASTENERS

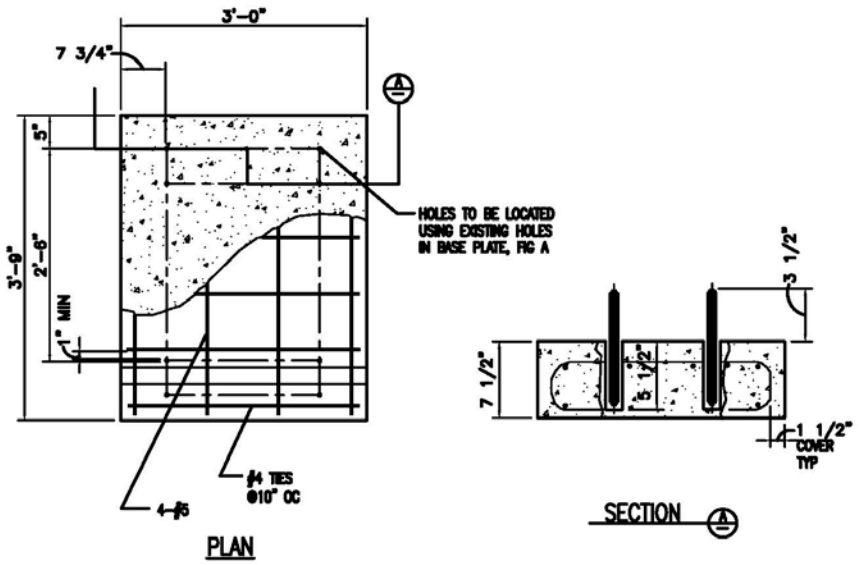

metro CONCRETE TEST BLOCK FOR TESTING ANCHOR ASSEMBLIES FOR DIRECT FIXATION RAIL FASTENER	DRAWING NO. EXHIBIT 34 11 36.13-D	
	SCALE AS NOTED	SHEET NO. 1 of 1
DEPARTMENT OF TRANSIT INFRASTRUCTURE AND ENGINEERING SERVICES		CONTRACT NO. N/A

EXHIBIT E

FASTENER ASSEMBLIES QUALIFICATION TESTING SEQUENCE FOR DIRECT FIXATION FASTENERS

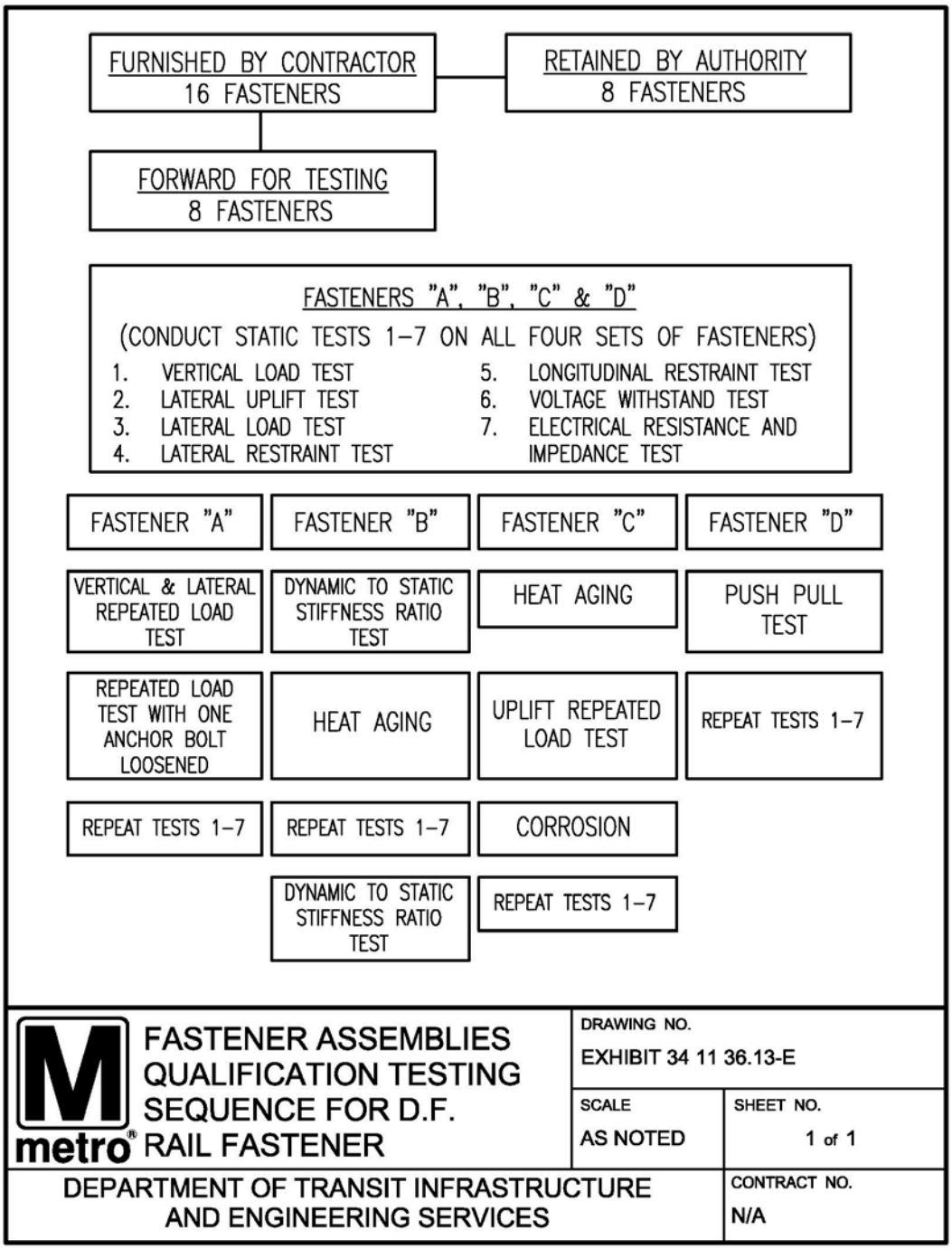

EXHIBIT F

VERTICAL LOAD TEST ACCEPTANCE CRITERIA FOR DIRECT FIXATION FASTENERS

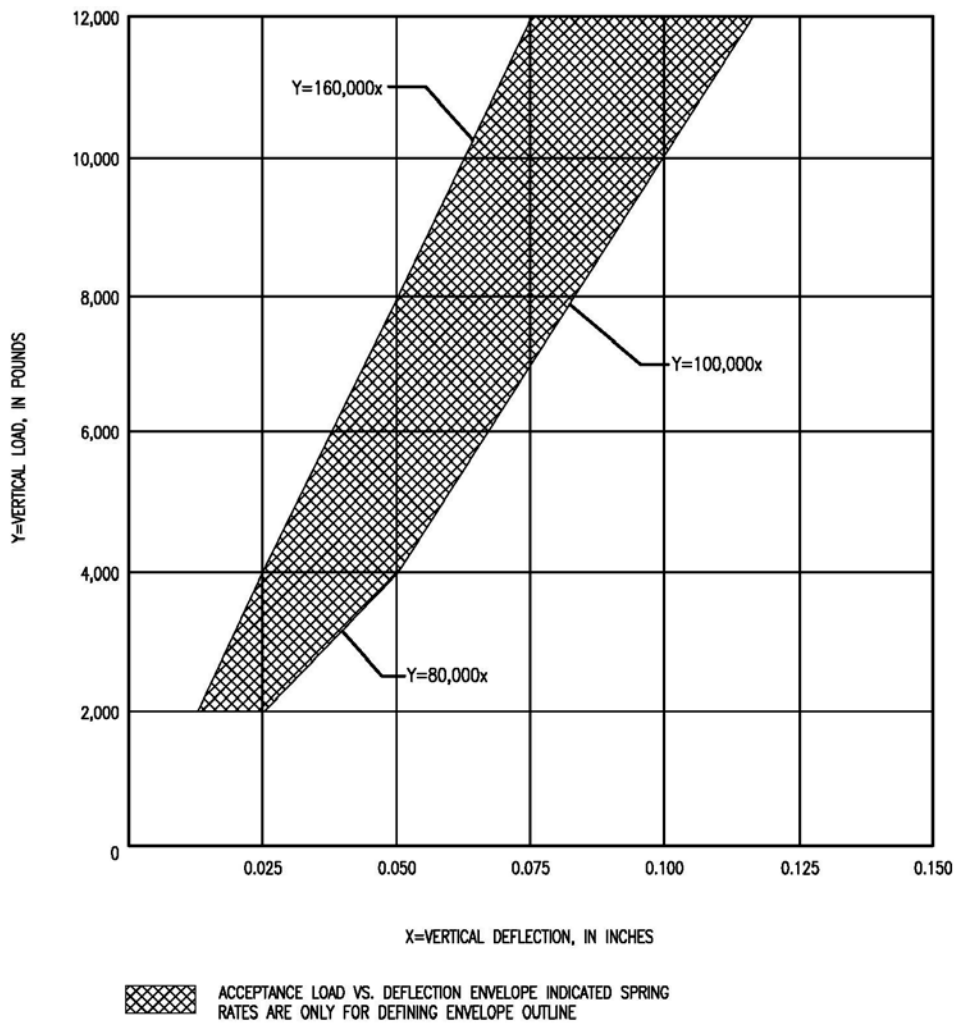

metro VERTICAL LOAD TEST ACCEPTANCE CRITERIA FOR DIRECT FIXATION RAIL FASTENERS	DRAWING NO. EXHIBIT 34 11 36.13-F	
	SCALE AS NOTED	SHEET NO. 1 of 1
DEPARTMENT OF TRANSIT INFRASTRUCTURE AND ENGINEERING SERVICES		CONTRACT NO. N/A

EXHIBIT G

LATERAL LOAD TEST ACCEPTANCE CRITERIA FOR DIRECT FIXATION FASTENERS

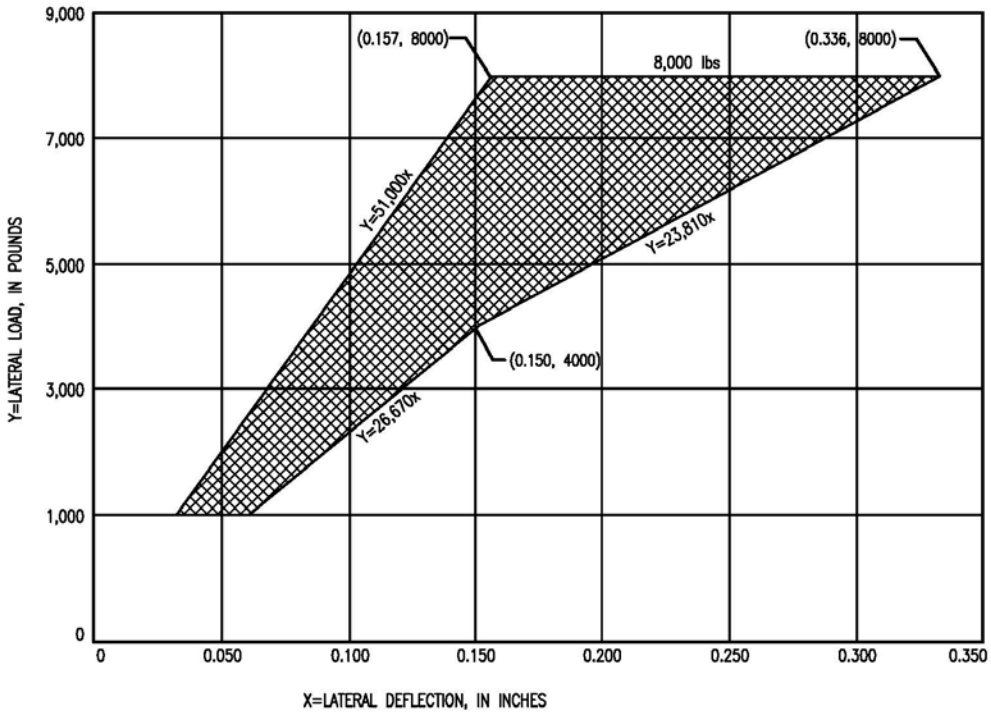

NOTES:

ACCEPTANCE LOAD VS. DEFLECTION ENVELOPE INDICATED SPRING RATES ARE ONLY FOR DEFINING ENVELOPE OUTLINE

metro LATERAL LOAD TEST ACCEPTANCE CRITERIA FOR DIRECT FIXATION RAIL FASTENERS	DRAWING NO. EXHIBIT 34 11 36.13-G	
	SCALE AS NOTED	SHEET NO. 1 of 1
DEPARTMENT OF TRANSIT INFRASTRUCTURE AND ENGINEERING SERVICES		CONTRACT NO. N/A

EXHIBIT H

LONGITUDINAL RESTRAINT TEST ACCEPTANCE CRITERIA FOR DIRECT FIXATION FASTENERS

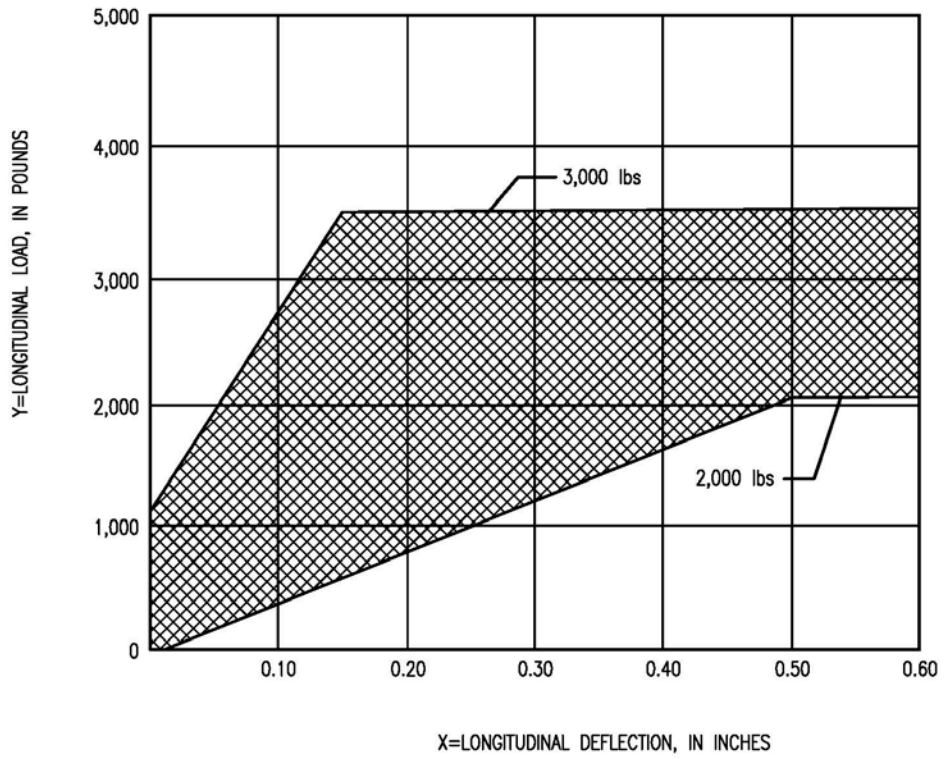

NOTES:

ACCEPTANCE LOAD VS. DEFLECTION ENVELOPE INDICATED SPRING RATES ARE ONLY FOR DEFINING ENVELOPE OUTLINE

metro LONGITUDINAL RESTRAINT TEST ACCEPTANCE CRITERIA FOR DIRECT FIXATION RAIL FASTENERS	DRAWING NO. EXHIBIT 34 11 36.13-H	
	SCALE AS NOTED	SHEET NO. 1 of 1
DEPARTMENT OF TRANSIT INFRASTRUCTURE AND ENGINEERING SERVICES		CONTRACT NO. N/A

END OF SECTION

SECTION 34 21 02

OPERATION AND MAINTENANCE TRAINING FOR TRACTION POWER

PART 1 - GENERAL

1.01 SUMMARY

A. This section specifies requirements for training of Authority personnel.

B. Training shall be conducted according to the following classes:

1. Operations and maintenance ("O&M") training, to include preventive and corrective maintenance, adjustment of all equipment in its anticipated installed environment and relay coordination study...
2. Engineering and technician training, for performing reliability-oriented inspection, maintenance, diagnostic tests, calibration, trouble-shooting and repair of the traction power substation equipment classes in accordance with applicable IEEE, ANSI, ASTM standards and applicable INETA test procedures.
   Engineering and technician training shall include training in utilization of diagnostic test equipment, Software Applications in conjunction with appropriate test, function/signal generation, measurement hardware to calibrate and test the operation of traction power substation equipment as well as the setting of Power Digital Meter for monitoring purpose.
3. Engineering training shall include a complete Traction Power Substation short circuit and coordination study.

C. Payment and Measurement Basis (if scheduled) or included in the lump sum installation cost of each facility: Compensation for work specified in this section will be made in accordance with the Unit Price Schedule.

1.02 SUBMITTALS

A. O&M training: Submit five copies of all training material and resume(s) of instructor(s) for approval prior to commencement of training. Each resume shall outline the instructor's qualifications, skills, and experience in training.

B. Engineering and Technician training:

1. Submit five copies of training course descriptions and syllabus, training plan, instructor's guide, recommended class size, course provider's qualifications and instructors' resumes prior to commencement of training.
2. Submit plans, equipment lists and software-generated signals and wave forms necessary for a training mock-up of laptop PC based relay testing and calibration system for approval.
3. Provide a copy of the short circuit and coordination study software with a minimum of two licenses. For initial training, provide 30 days temporary license for 10 power engineers.

1.03 QUALITY ASSURANCE

A. Standards: applicable industry standards of IEEE, ANSI, ASTM, and INETA (International Electrical Testing Association).

B. O&M Training Instructor Qualifications: Instructors shall:
   1. Have in-depth knowledge of the design, packaging, operations, maintenance and trouble-shooting of the systems to be taught.
   2. Have schooling in adult education teaching methods or previous satisfactory experience in teaching with emphasis on the subject matter to be covered in the course of instruction.

C. Engineering and Technician Training, Course Provider and Instructor Qualifications:
   1. The course instructors shall have schooling in adult education methods or previous satisfactory experience in adult education with a minimum of 2 years in-depth and professional experience in the following components of utility, industrial or traction power systems as they apply to the selected course:
      1. software applications for signal and waveform design procedures as applicable to the DC relay testing procedures, and Power quality meters.
      2. Theory of protective relay design, operation and calibration procedures as applied to DC power systems
   2. Preferred providers are National Technology Transfer, Inc., AVO Training Institute or approved equal.

D. Engineering Short Circuit and Protective Relay Coordination Training Course Provider and Instructor Qualifications:
   1. The course instructors shall be a professional engineer with extensive experience in traction power substation system protective relay study. Preferred provider is the equipment manufacturer's consultant providing the short circuit and coordination study for the current contract.

PART 2PRODUCTS

2.01 MATERIALS

A. O&M Concept of Training:
   1. Classroom and field instruction shall be designed to cover, in detail, the functions of each item of equipment. Fault isolation and trouble-shooting techniques will be covered to the extent necessary to permit a technician to diagnose and repair faulty modules. Instruction shall be designed to provide Authority maintenance personnel with practical experience in the performance of preventive and corrective maintenance. Trouble-shooting and fault isolation of simulated faults shall be provided for each type of equipment in the traction power substation and tie breaker station, including all AC and DC switchgear, rectifiers, and transformers.
   2. The Contractor shall develop and provide all operation and maintenance training necessary for Authority-designated personnel to support the power equipment. Classroom instruction shall include not only the anatomy and functioning of the parts under discussion, but the essentials of their routine care including lubrication schedules, adjustments, limits, test frequency, inspection frequency, trouble-shooting, identification by manufacturer's part number, removal and

replacement. Instruction shall cover theory of operation of the power systems, individual modules and special protective circuits. Flow diagrams must be used to show sequence of events and time required to complete each event.

3. The course shall include performance of preventive maintenance operations on the equipment and hands-on trouble-shooting of all subsystems.
4. The Contractor shall assume that the Authority's employees have no knowledge of the features of the new equipment. For the purpose of course development and presentation, the Contractor shall assume all Authority students are high school graduates (or equivalent), and that maintenance personnel will possess the ability to use basic hand tools and electronic test equipment.
5. The Authority shall be permitted to videotape all class presentations.
6. Instruction shall include an evaluation device(s) (written and/or practical tests) designed to measure the extent to which students have met the learning objectives, with an answer key for each of the tests developed. Tests should use a multiple choice format, and have been validated in a pilot course or by some other means agreed to by the Authority (OPER TRNG). Whenever possible, a practical hands-on test shall be developed to demonstrate the transference of operational/mechanical skills.

B. O&M Training Materials

1. First generation reproducible training material shall be developed as specified herein. Training should be conducted using final manuals approved by the Authority and certified by the Contractor as being correct and conforming to as-manufactured (and where appropriate, as-built and as-adjusted) conditions. Manuals shall become the property of the Authority at the end of program. The following training materials for the course shall be developed:
   a. Instructor material: Instructor material shall be provided for the course.
   b. Course outline: A course outline with measurable learning objectives shall be provided. The course outline shall provide a topic outline for each item of equipment. Maintenance training shall include a section devoted to system fault analysis and trouble-shooting. The learning objectives shall be stated for each topic.
   c. Lesson plans: A set of lesson plans shall be developed for each item of equipment corresponding to the topic outline and shall contain the following information: Lesson title, instruction time, objectives, training aids required, instructing sequence (outline), tests, and summary.
   d. Training aids: Optimum use of visual aids, including 8-inch by 10-inch transparencies, 35-millimeter slides, videos, mockups, and functional representations are required for any equipment which requires theoretical discussion. This may be in the form of an animated schematic, a model of the equipment, an actual device, an interactive video training device or an Authority-approved (TRNG) substitute. All mock-ups become the property of the Authority. Training aids which can be conveyed in electronic file format are preferred, and for any such items, the electronic files shall be provided to the Authority. Any drawings which are not available in electronic file format but which are needed for the course of instruction shall be provided to the Authority in transparency.
   e. Instructional material: The primary source of instructional material shall be the applicable equipment operation and maintenance manuals, as-built equipment drawings and as-built power and control circuit schematic drawings. In addition, the Contractor shall develop notebooks containing such additional drawings, descriptive information and procedures necessary to ensure that all learning objectives are met in an

orderly and timely manner. Workbook material shall be arranged by item of equipment and according to the topic outline.

f. Course topic outlines and schedules: The topic outline and schedule for the course shall include the following:
   1) Description of course including course objectives and training program level.
   2) Course length and recommended number of students per course.
   3) List of training materials required including documentation and equipment.
   4) Objective for each topic and the time allotted for each topic.
   5) Schedules listing the major topics and sub-topics with a time allocation for each topic and sub-topic.

g. Instructor guides and training aids: The instructor guide for the course shall include:
   1) Table of contents listing each topic and the time allotted.
   2) List of applicable documents.
   3) List of training materials.
   4) Course learning objectives including course length and recommended number of students.
   5) Each topic with a cover sheet listing topic, objective, time allotted, and training aids required.
   6) Training aids.

h. Student workbook: Copies of operations and maintenance procedures, as-built diagrams, drawings and schematics shall be reproduced from engineering data and manuals by the Contractor for inclusion in a student workbook.

C. Engineering and Technician Training Concept of Training:

1. Classroom instruction shall be designed to cover, in detail, the following procedures and design criteria:
   a. AC / DC Protective Relay Calibration Procedures
   b. The theory and application of AC/ DC traction power system protective device coordination studies including the interpretation and application of AC and DC protective device timing curves to equipment protection within transit authorities
   c. The design, operation, testing, trouble-shooting, repair and calibration of AC/DC over-current and rate of rise protective relays, recloser relays and energized/grounded structure relays. The provided mockup is to be used for instructional purposes to demonstrate the process of troubleshooting and calibrating the AC and DC relays
   d. The methods for performing tests on installed and operational AC/ DC Switchgear with particular emphasis on electrical isolation equipment and techniques to perform multiple measurements concurrently without causing ground loops
2. At the conclusion of the course the students should be able to recognize and correct relay operating problems, calibrate AC/DC relays and obtain test measurements on operating AC/DC switchgear using laptop PC based measurement software and associated hardware, setup the provided power quality meter, retrieve store data in the power quality meter using laptop PC based provided software.
3. Instruction shall include an evaluation device(s) (written and/or practical tests)

designed to measure the extent to which students have met the learning objectives, with an answer key for each of the tests developed. Tests should use a multiple choice format, and have been validated in a pilot course or by some other means agreed to by OPER TRNG. Whenever possible, a practical hands-on test shall be developed to demonstrate the transference of operational/mechanical skills.

4. For the purpose of course development and presentation, the Contractor shall assume all Authority students are high school graduates (or equivalent), and that maintenance personnel will possess the ability to use basic hand tools and electronic test equipment.
5. Training courses shall be conducted on Authority property. Necessary training material, mockups, AC/DC protective relays and contractor-supplied test equipment may be shipped to and stored at the training facility in coordination with the Authority (OPER-TRNG).

D. Engineering and Technician Training- Training Materials

1. Course Outline: A course outline with measurable learning objectives shall be provided. The course outline shall provide a description of the course and duration, recommended class size, instructor qualifications, list of training materials including documentation and equipment, topic outline for each item of equipment and time allotted for each topic.
2. Instructor's Guide: An instructor's guide for the course shall include a table of contents for each topic and the time allotted; a list of applicable documents and training materials; course learning objectives; course length and recommended number of students; training aids.
3. Student Manual / Workbook shall include all materials necessary for student interaction in the learning process and may serve as a field reference at the conclusion of the course. A copy of the Student manual / Workbook will be provided to each participant enrolled in training classes and one copy shall be provided to OPER TRNG for archival purposes. It shall contain, at a minimum:

    1) Program Overview / Introduction

    2) Statement of overall course goals

    3) Learning Objectives, stated in measurable terms, that describe desired skills or knowledge to be obtained

    4) Prose treatment, not outline format, of a fully developed content presentation, developed in the same modular format as the instructor's guide.

    5) Illustrations, charts, graphics and duplication of visual aids used during the course presentation in order to enhance content presentation and provide a course reference during later field use.

    6) A Problems or Frequently Asked Questions section related to lesson content, as appropriate.

4. Visual Aids: Handouts, transparencies, slides, films or computer presentations are required for each circuit or wiring diagram and all activities not demonstrable in lecture or hands-on instruction.

5. Supplemental Materials: A functional mockup of the installed switchgear containing the subject relays. Auxiliary relays and indicating lights may be used to simulate circuit breaker operation within the mockup. Theoretical discussion of the operation of the system should be supplemented with an animated schematic or an interactive video training device or a TRNG-approved substitute.

6. In addition to the training mockup, a sufficient number of each type of relay should be supplied so as to allow students to acquire hands-on familiarization while at their desks/tables during training lecture and discussion periods.

E. Engineering Training: Concept of Training and Material

2. Training shall be scheduled through the Traction Power Assistant Chief Engineer's office.

3. Training shall be conducted using the final short circuit and protective devices coordination study approved by the Authority and certified by the Contractor as being correct and conforming to as-manufactured (and where appropriate, as-built and as-adjusted) conditions.

4. Manual / Workbook shall include all materials necessary to present in a step-by-step, simplified, yet comprehensive work fashion, the principles of system protection and the proper application and coordination of those components that may be required to protect traction power substation systems. A copy of the manual / Workbook will be provided to each participant enrolled in training classes and one copy shall be provided to the assistant chief engineer's office for archival purposes. It shall contain, at a minimum:

1) Program Overview / Introduction

2) Statement of overall course goals

3) The theory and application of AC/ DC traction power system protective device coordination studies including the interpretation and application of AC and DC protective device timing curves to equipment protection within extra heavy transit traction power substation.

4) AC and DC short circuit calculation.

5) AC and DC protective device coordination.

6) Application of commercial software for power system analysis.

2.02 O&M COURSE OF INSTRUCTION:

A. The course of instruction shall be developed and conducted by the Contractor and given by the Contractor to those individuals designated by the Authority. It shall consist of in-depth instruction on the fundamentals involved in the design of the complete system

combined with practical aspects of operation and maintenance. It shall also include the following:

1. Practical exercises that require the trainees to make use of the operation and maintenance manuals and parts identifiers.
2. Familiarization with the assembly, subassembly and components that make up a total system. This part of the course shall include instruction and practical exercises in trouble-shooting at a level higher than that performed by equipment operators.
3. Use and replacement of original assemblies, subassemblies and components with compatible assemblies, subassemblies and components manufactured by others where applicable.
4. Handouts to all trainees that include information drawings, shop drawings, catalog cuts, manufacturer's literature, equipment maintenance check lists and other literature describing the total system.
5. Video and color slide presentations showing system installation, operation, trouble-shooting, maintenance, module removal and replacement.
6. Tools and test equipment necessary to conduct operation and equipment maintenance trouble-shooting.

B. Supplemental Training: In the event the Contractor changes or performs modifications to the equipment subsequent to the training that impact form, fit and/or function, the Contractor shall provide supplementary training to the Authority's training instructor on a one-time basis.

2.03 ENGINEERING AND TECHNICIAN COURSE OF INSTRUCTION

1. The course of instruction shall be developed and conducted by the contractor or the contractor's approved representative to those individuals designated by the Authority. It shall consist of in-depth instruction of the fundamentals involved in the design of the complete system combined with practical aspects of operation, maintenance, testing and calibration. It shall also include the following:

   a. practical exercises that require the trainees to make use of software to develop and apply wave forms, operation and maintenance manuals, parts identifiers, schematics, time curves, published industry standards and procedures and other applicable reference materials

   b. familiarization with the assembly, subassembly and components that make up a total system

   c. use and replacement of original assemblies, subassemblies and components with compatible assemblies, subassemblies and components manufactured by others where applicable

   d. handouts to all trainees that include information drawings, shop drawings, catalog cuts, manufacturer's literature, equipment maintenance and calibration check lists, parts lists and other literature describing the total system

   e. video and color slide presentation showing system installation, operation, trouble-shooting, maintenance, module removal and replacement

   f. recommended tools and test equipment necessary to conduct operation and equipment maintenance trouble-shooting both in the field and at the bench.

2.04 O&M TRAINING EQUIPMENT

A. Installed equipment shall be used in the course of instruction.

B. Training shall include practical exercises that permit the trainees to perform hands-on work using installed equipment under normal operating conditions.

C. Training equipment: Any special tools required for maintenance training shall be supplied by the Contractor and delivered to the Authority after completion of the course.

D. Test equipment: Test equipment required for maintenance training shall be supplied by the Contractor and delivered to the Authority after completion of the course.

2.05 ENGINEERING AND TECHNICIAN TRAINING EQUIPMENT

A. Necessary training equipment, mockups, contractor-provided relays and contractor-supplied test equipment may be shipped to and stored at the training facility in coordination with OPER-TRNG. Installed Authority-owned typical protective relays may be provided in coordination with and conditionally based on the approval of OPER-TRNG.

B. Installed Authority-owned equipment may be used in coordination with and conditionally based on the approval of OPER- TRNG.

C. Training shall include practical exercises that permit the trainees to perform hands-on work using contractor-supplied equipment or Authority-owned installed equipment conditional to OPER-TRNG approval.

D. Training equipment: Any specialized tools, other than basic hand tools, laptop/notebook computers, application software, connection and interface devices required for training shall be supplied by the contractor.

E. Test Equipment: Specialized test equipment, other than standard VOMs, laptop/notebook computers, application software, connection and interface devices required for training shall require for maintenance training shall be supplied by the contractor.

F. All computers received and owned by WMATA shall be procured and processed per Authority Published P/I (Policy and Instruction).

PART 3 EXECUTION

3.01 TRAINING APPLICATION

A. The training program shall consist of the following:

Course Title	Course Length	Class size in persons	Number of Courses	Total number of course hours per person per

				class
Operation and Maintenance Training	80 hours	25	2	80
Engineering and Technician Training	32 hours	10	1	32
Engineering	24 hours	10	1	24

B. Practical training on equipment shall be not less than 60% of the course duration.
   1. Location: The contractor shall provide training facility with disclaimer allowing WMATA to select and provide a facility for certain selected courses at the engineer's discretion.
   2. Times: Class times will be at the convenience of the Authority.

END OF SECTION

SECTION 34 24 19.10

CONSTANT WATTAGE CONTACT RAIL HEAT TAPE SYSTEM

PART 1 - GENERAL

1.01 RELATED DOCUMENTS

A. Drawings and general provisions of the Contract, including General and Supplementary Conditions and Division 01 Specification Sections, apply to this Section.

1.02 SUMMARY

A. Section Includes the following:

1. Furnishing, delivery and installation of a complete and operational constant wattage contact rail de-icing system with an operating voltage of 750 V dc.
2. Heater cable assembly
3. Heater controllers
4. Fuse box disconnects
5. Power and Control Cable

B. System Description

1. A Contact Rail Heater is a long line electrical heating system that is applied to the web of the contact rail ("third rail") to prevent ice accumulation. This system prevents costly service interruptions by ensuring a constant connection between the contact rail and the pick-up shoe of the transit vehicle. The heaters are designed to withstand heavy shock vibration of train vehicles moving in extreme weather.

   a. Operating Requirements:

      1) The constant wattage contact rail de-icing system shall be designed to withstand ambient temperatures of -40°F to +120°F; expansion stresses from rail temperature excursions to +180°F; effects of weather (rain, sleet, snow, ice, UV exposure); vibration from passing rapid transit vehicles; common chemicals found in the Metropolitan Washington Area Rapid Rail Transit environments and road salts.

C. Related Requirements:

1. Section 01 33 00 – Submittal Procedures
2. Section 34 24 19.16 – Wire and Cable
3. Section 34 24 05 – Basic Materials and Methods for Traction Power

1.03 REFERENCES

A. Definitions:

1. Constant Wattage: The wattage required to keep the sheath temperature constant.
2. Contact Rail: The metal surface that is maintained at 32 degrees Fahrenheit.
3. Heater Cable Assembly: consists of heater cable, extruded outer sheath / fiberglass channel, spring clip, abrasion pad, end cap kit, splice kit, and power lead termination kit. The heater cable electrically heats the contact ("third") rail for de-icing purposes.
4. Heater Controllers: control hierarchy consisting of:
   a. Zone (Trackside) Heater Control Panel – controls electrification of up to 800lf feet of contact rail heater cable.
   b. Master Heater Control Panel – Controls several Zone Heater Control Panels. Located in traction power substations and tie breaker stations.
   c. Remote Heater Controller (Located in OCC) – for selective, remote control of all heating elements in the system.
5. Fuse box Disconnect: Routes 750V from contact rail to power heater cable. Disconnects the circuit in cases of shorting and overcurrent.
6. Sheath: Uniform and continuous covering, metallic or nonmetallic, enclosing the insulated conductor(s), used to protect the trace heater against mechanical damage and influences from the surroundings (corrosion, moisture, etc.).
7. Maximum Sheath Temperature: The highest outer sheath temperature (of heater cable) that a heater is capable of generating when powered at 900V DC in free air.
8. Fiberglass Channel: Designed to hold contact rail heater cable in close contact with steel or aluminum clad (composite).
9. Attachment Clips: Designed to hold the fiberglass channel with heater cable in intimate contact with steel or aluminum clad (composite) contact rail.
10. Field Side: The field side of a rail is the face pointing away from the running rails or the outside face.
11. Rail Side: The rail side of a rail is the face pointing towards the running rails or the inside face.

B. Reference Standards:

1. UL 94 - Standard for Safety Tests for Flammability of Plastic Materials for Parts in Devices and Appliances - Sixth Edition.
2. NFPA 130 - Standard for Fixed Guide Way Transit and Passenger Rail Systems.
3. IEEE 515 - Standard for the Testing, Design, Installation, and Maintenance of Electrical Resistance Trace Heating for Industrial Applications.
4. NEMA ICS2 - Industrial Control and Systems Controllers, Contactors, and Overload Relays Rated 600 Volts.
5. NEMA ST-20 - Dry-Type Transformers for General Applications.

6. ASTM B368 - Standard Test Method for Copper-Accelerated Acetic Acid-Salt Spray (Fog) Testing (CASS Test).
7. ASTM B633 - Standard Specification for Electrodeposited Coatings of Zinc on Iron and Steel.
8. ASTM D256 - Standard Test Methods for Determining the Izod Pendulum Impact Resistance of Plastics.
9. ASTM D543 - Standard Practices for Evaluating the Resistance of Plastics to Chemical Reagents.
10. ASTM D696 - Standard Test Method for Coefficient of Linear Thermal Expansion of Plastics between -30C and 30C with a Vitreous Silica Dilatometer.
11. ASTM D3032 - Standard Test Methods for Hookup Wire Insulation.
12. ASTM F593 - Standard Specification for Stainless Steel Bolts, Hex Cap Screws, and Studs.

1.04 SUBMITTALS

A. Submit in accordance with Section 01330(01 33 00) within (7) days after Notice to Proceed.

B. Product Data
   1. Manufacturers catalog cut sheets and data for:
      a. Heater Controllers.
      b. Heater Cable Assembly.
   2. Operations and Maintenance Manuals.
   3. Preventive Maintenance Instructions (PMI).
   4. Spare Parts Lists.
   5. Maximum Sheath Temperature for De-Icing System.

C. Shop Drawings
   1. Heat Controllers
      a. Power and control internal wiring diagrams.
      b. Equipment layout and enclosure details.
      c. Time-current curve for fuses.
   2. Heat Cable Assembly
      a. Details of heater termination, fiberglass channel and spring clips.
      b. Installation details for contact rail, splices and expansion joints.
   3. De-Icing System
      a. Proposed fuse time-current curve for main fuse disconnect and for individual heater circuit fuses for heater lengths from 50 lf to 700 lf in 50 lf increments
      b. Composite coordination curves of main fuse, circuit fuse and heater, maximum in-rush currents.

D. Test data

1. Design Test Reports: Provide (2) original copies prior to shipment of heater cable assembly.
2. Production Test Reports: Provide (2) original copies prior to shipment of heater cable assembly.
3. Field Test Reports: Provide within (2) weeks after testing.
4. Inrush current type test data for heater-cables on log-log time-current graphs for 750DC for 0 degrees Celsius to 40 degrees Celsius.

E. Field Test Plan:

1. Submit 90 days before shipment of equipment, with a list of proposed test equipment and test recording sheets.

F. Samples

1. Heater Cable Assembly sub-components.

1.05 QUALITY ASSURANCE

A. Qualifications

1. The manufacturer of the constant wattage heater cable assembly shall have provided a constant wattage third rail heater to two other transit authorities minimum, for a total of at least five projects.
2. The heater controller manufacturer shall be regularly engaged in production of similar control panels on at least five other projects.
3. Furnish compression splice terminals and heat shrinkable tube with each lead wire end for field connections with #10 AWG minimum, 2000 volt insulated wire specified in Section 16128 (34 24 19.16). Do not provide splices in cables at other than at indicated locations without approval of the Engineer.
4. If any product furnished under this Section has an annual failure rate of twelve percent or more of the total of heater sections supplied and the failure is determined to be a fault of the product as supplied, replace all such products required to eliminate the cause of the failures without any additional cost to WMATA. Output below ninety percent of rated output at 750V dc at 32 degrees is considered as failure.

B. Factory Testing

1. Heater Test

a. Design Tests: All design tests shall be performed on new heater samples of two to ten feet long, unless otherwise dictated by the respective testing standard. Pass/Fail criteria are indicated herein or within respective standard. All Tests of IEEE 515 Section 4.1.

1) For Thermal Aging Test (4.1.6): Aging temperature shall be 104 degrees F. Power output shall change no more than 15% from the original power value prior to aging.

2) For Power Output Test (4.1.11): Nominal power output shall be 30-40 watt/ft. at 750V DC on a 32F substrate.

3) Voltage Withstand: Withstand 500V DC without failure.

4) Over Voltage Test: Use 1200V DC for one hour on sample not in contact with substrate, in still air. Maximum Sheath Temperature shall not exceed 400°F, and no melting, charring or burning of heater elements shall occur.

b. Production Tests:

1) WMATA reserves the right to require the Contractor to supply production samples at no additional cost to WMATA in order to have samples tested for compliance by an independent laboratory selected by WMATA. These test costs will be paid by WMATA.

2) WMATA reserves the right to witness all tests conducted upon the heater, if so desired.

3) All materials to be furnished under the Contract are subjected at all times during manufacture, fabrication, construction and testing to such inspection by WMATA.

C. Field Testing Personnel

1. Provide services of qualified manufacturer's engineering representatives to perform specified field testing program.
2. The Contractor is responsible for staffing and coordinating the testing effort.
3. Provide engineers, technicians and journeymen as necessary to set up and implement testing.
4. Submit certified test reports and results within seven days after field tests.

1.06 DELIVERY, STORAGE, AND HANDLING

A. Delivery, storage and handling for zone, master and remote heater controllers shall include:

1. Mark each item in accordance with applicable reference standards.
2. Ship each unit securely packaged and labeled for safe handling in shipment and to avoid damage and distortion.
3. Store products in secure and dry facility.
4. Deliver spare parts to be stored to Rail System Maintenance Facility, 195 Telegraph Road, Alexandria, Virginia 22314.

B. Delivery, storage and handling for contact rail heater assembly shall include:

1. Stamp with permanent ink on the finished length of the heater cable, the following information on the outside surface (side away from rail) in 1/4" high (minimum) black letters repeated every six (6) feet (maximum):

   a. Manufacturer’s name

   b. Manufacturer’s part number

   c. Voltage rating

   d. Wattage per foot

2. Supply heater cable on approximately five-foot diameter reels for the A and B sides of the zone(trackside) heater control panel in the lengths as required per contact rail heater plan on each side of control panel as developed by the contractor. Length of heater cable on each side (A or B) of controller shall not exceed 500 feet. Terminate each heater circuit in the factory to circuit lengths as required, and in accordance with contact rail heating plan.
3. Ship items securely packaged and labeled for safe handling in shipment and to avoid damage.

1.07 WARRANTY

A. Special Warranty: Warrant each heater cable length to be free from defects in material and workmanship, for an additional period of five years after date of final installation and acceptance.

PART 2 - PRODUCTS

2.01 EQUIPMENT – CONTACT RAIL HEATER CABLE ASSEMBLY

A. Contact rail heater cable assembly: Consisting of following items suitable for installation on aluminum-clad (composite) contact rail or steel contact rail as required per WMATA contact rail system.

1. Contact Rail Heater Cable:
   a. Shall have constant wattage output independent of rail temperature.
   b. Nominal Output: 30-40 watts/ft. at 750V dc.
   c. Maximum Sheath Temperature: 400ºF.
   d. Length: as required by plans, subject to maximum tolerance of minus three percent.
   e. Marking: Mark at intervals no less than six ft. 0.25-inch high letters with manufacturer's name, voltage, rated power output and batch number.
2. Fiberglass Channel:
   a. Material: fiberglass reinforced polyester.
   b. Tensile Modulus (ASTM D638): greater than $1x10^6$ psi.
   c. Thermal Expansion Coefficient (ASTM D696): $13x10^{-6}$ in/in/°F.
   d. Solvent Resistance (ASTM D543): Less than 2% weight change in diesel fuel, gasoline, and salt water. Less than 0.5% change in water.
   e. Flammability Classification (UL 94): VO.
3. Attachment Clips:
   a. Easy installation/removal and not interfering with contact rail cover board assembly.
   b. Material: Spring steel, minimum of 1-1/4 inch wide and 64 mils thick.
   c. Finish: Zinc chromate coating, 0.9 mils thick for service condition SC-4, Type 2, in accordance with ASTM B633.
   d. Heat treated after fabrication to Rockwell scale hardness of C30-C40.
   e. Spacing of clips: 18" CC, or as approved by the Engineer.
   f. Corrosion Test in accordance with ASTM B368: No rusting after 130 hours in a copper acetic acid bath.
4. Heater Factory Terminations:
   a. Conforming to NEMA WC70.
   b. Conductor: AWG #10 copper wire.
   c. Insulation: Flame-retardant XLPO.

d. Voltage: 2000 volt rating.

e. Standard lead length: 10 feet.

f. Terminations designed with water tight seal. Suitable for use in wet and dry outdoor locations, open air, conduit, cable trench, and underground ducts or direct buried.

g. Each lead wire marked with manufacturer’s name, conductor size, insulation material and voltage rating.

5. Shop Assembled Terminations: Terminate using materials recommended by heater manufacturer and in accordance with manufacturer's instruction in a clean and dry area. Each termination shall be subjected to the following tests:

6. Abrasion Pad

a. Material: Continuously extruded EPDM rubber.

b. Durometer Hardness (Shore A): 60.

2.02 EQUIPMENT – HEATER CONTROLLERS

A. Auxiliary Relays

1. Type – Electrically held.

2. Standard – NEMA ICS2 – 212.

3. Contacts:

a. Number and Type – 2 NO/NC or as specified.

b. Voltage – 120V AC or DC as specified.

c. Current – 0.45A resistor load and 0.3 inductive load.

d. Coil – 125V DC.

B. Auxiliary Time-Delay Relays

1. Type - Electrically held.

2. Standard – NEMA ICS2.

3. Contacts:

a. Number and Type – (2 NO) or (1 NO, 1 NC) as required.

b. Voltage – 120V AC or DC as required.

c. Current – 1.0A DC resistive load, 2.0A AC inductive load.

d. Time-Delay – Time Delay pick up adjustable as specified.

e. Coil – 120V dc.

C. Magnetic Current Relays / Shunt Device

1. Type – Current actuated magnetic. Supervisory indication via shunt device.

2. Standard – NEMA ICS2.

3. Contacts:

a. Number and type – 2 NO.

b. Voltage – 120V dc.

4. Coil:

a. Connection – In series with load.

b. Insulation – 1000V dc to ground or contacts.

c. Continuous current rating of series coil – coil rating suitable for pick-up as required for length of heater to indicate heater energization. Provide calculations for WMATA Engineering approval.

D. 24V DC Auxiliary Relays (Supervisory Control):

1. Type – Dual-coil, mechanically latching, with electrical reset coil.

2. Standard – NEMA ICS2.

3. Contacts:

a. Number and type - 2 form 'C' with N.O. Contact for HCR-ON, as shown on drawings.

b. Voltage - 125V dc.

c. Current - 0.45A dc resistive load.

4. Coil – 24V dc.

E. DC Contactors

1. Type - Electrically held.

2. Standard - NEMA ICS2.

3. Size - NEMA Size 3.

4. Poles:

a. Number: Two.

b. Voltage: 1000V dc.

c. Current: 100A Continuous.

d. Withstand: 3000V dc high pot test for 10 seconds.

5. Arc chute – With 50A blowout coils

6. Auxiliary contacts – 1NO, 1NC at 10A, 120V AC

7. Coil – for operation from 120V AC.

F. Indicating Lights

1. Master Heater Control Panel: LED, 120V, Maintain NEMA 4X rating when installed to enclosure.

G. Switches

1. Lamp Test Switch for Master Heater Control Panel.

a. Push button, 120VAC, 10 A Current continuous, momentary contacts.

b. Maintain NEMA 4X rating when installed to enclosure.

2. Selector Switches

a. 120V AC, 10 A Continuous.

b. Maintain the NEMA Enclosure rating for the zone or master controller specified.

1) Standard – NEMA ICS 2.

2) Knob operated

3. Molded Case Switches

a. 3-pole, 100A, non-automatic molded case circuit breaker.

4. Limit Switch (Door Interlock)

a. Rated minimum at 250V AC, 5A.

b. Precision plunger or roller-plunger, snap action.

H. Fuse and Fuse block

1. 120V AC Type: UL Class H, 30 ampere.
2. 480V AC Type: UL Class H, 30 ampere.
3. 120V DC Type: UL Class RK5, 30 ampere.
4. 1000V DC Type: Current limiting, blade type, current rating as shown.
5. Fuse block – Porcelain, phenolic or polycarbonate, surface mounted.

I. Molded Case Switches (Non-Automatic Molded Case Circuit Breaker): 3-pole, 100A, non-automatic molded case circuit breaker.

J. Space Heater for Zone (Trackside) Heater Control Panel

1. 120V AC, 60Hz, 35 Watt Rating. Housed with a grill guard with no sharp edges with low operating surface temperature.

K. Terminal Boards

1. Control Wiring

a. 300V AC or dc, 30A Box Terminal.

b. Direct mounted or rail mounted as indicated on drawings.

2. DC Power

a. 1000V dc, 300A Current, heavy duty and terminal.

b. Voltage Ratio: 480/120V AC, 60HZ, 100A Current per NEMA ST-20.

c. Insulation System: Rated for 150 Degrees Celsius.

1) Winding Resistance: 80°C.

2) Hot Spot: 110°C in winding.

L. Fiberglass Enclosure for Zone (Trackside) Heater Control Panels

1. Type - NEMA Type 4X.
2. Material: Molded fiberglass reinforced polyester material, 1/8 inch minimum. Shall contain ultra-violet inhibitor.
3. Hardware: Type 316 stainless steel for all bolts, nuts, screws, and handles.

4. Door Hardware: Secure by means of quarter-turn, lockable handle. Fitted with removable print pocket.
5. Color: ANSI 61 Gray.

M. Enclosure for Master Heater Control Panel and Remote Heater Controller

1. NEMA 12, Wall-mounted type, single-door, with internal sub-panel.
2. Material: Minimum 14-gauge steel. Enclosure reinforced when area exceeds 30 in^2. Size as required.
3. Door Hardware: Secure by means of quarter-turn, lockable handle. Fitted with removable print pocket.
4. Hardware: Type 316 stainless steel for all bolts, nuts, screws, and handles.
5. Color: ANSI 61 Gray.

N. Nameplates, Tags and Wire Labels

1. Nameplates: Three-ply, laminated phenolic plates. Black lettering on white background (black core, white face). Engrave with vertical gothic lettering using round or square cutter (not V-shape). 2.5 inch plate with 1.5-inch high lettering.
2. Cable Tags: Non-ferrous tags, stamped or machine printed.
3. Wire Labels: Machine printed. Sleeve-type, heat shrinkable, flame type XLPE. Wire identification same as corresponding terminal block identification unless otherwise shown.

O. Control Panels

1. Trackside Heater
   a. The following components shall be mounted on the door.
   b. Quantities may be adjusted per the Authority's Traction Power Engineers' approval, to suit site conditions and contact rail heating plans/zones.
      1) Insulated barrier around DC contractor.
      2) Indicating lights, lamp test switch, and selector switch (ON-OFF-REMOTE) mounted on sides of enclosure.
      3) Two limit switches (door interlock).
      4) One spare fuse of each type and rating for each panel.
2. Master Heater
   a. Provide the tie breaker stations and traction power substations.
   b. The following components shall be mounted on the door.
   c. Quantities may be adjusted per the Authority's Traction Power Engineers approval to suit site conditions and contact rail heating plans/sons.
      1) Indicating lights (push-to-test).
      2) Selector switches.
         a) (ON-OFF), two pole.
         b) (LOCAL/REMOTE), two pole.

3) One spare fuse of each type and rating for each panel.

P. Fuse box Disconnect

1. Fuse: Current limiting blade type. Rated at 1000V DC, 100A. Capable of interrupting up to 80,000A fault current for bolted fault with system time constant of 40 milliseconds.
2. Enclosure – “Shoe Box” Design:
   a. Cover: Removable cover, with insulated handle. Designed to hold fuse and provide connections to the fixed terminals inside the box. Minimum pull-out force of 6 pounds. Cover gasket shall be oil-resistant neoprene with oil-resistant adhesive.
   b. Connections: Fixed terminals provided in box with spring reinforced clips for making connection to fuse, and bolted connection for cable lugs.
   c. Material: 1/2"-thick GPO-3 fiberglass laminate.
   d. Drain hole: 1/2"-diameter with nylon screen in bottom.
   e. Mounting: For side mounting to galvanized steel plate with studs or bolts as furnished with the box.
   f. Cable entry at one end for 1-#4 AWG, 2000V, single - conductor cable and at other end for 2-#8 AWG, 2000V single-conductor cables. Seal fittings with compression gasket to suit as approved.
   g. Danger labels: Both sides of box shall be labeled with prominent and permanent labels with red background and white letters stating:DANGER-750 VOLTS - DO NOT OPERATE UNDER LOAD:
3. Provide one spare fuse for each fuse box disconnect.

PART 3 - EXECUTION

3.01 INSTALLATION

A. Install all heater control panels, fuse box disconnects, and heater cable assembly.

B. Complete the power wiring circuits and the control power circuits as shown on drawings and in accordance with approved shop drawings.

C. Control Panel Control Wiring: Install in accordance with the requirements of Section 16052 (34 24 05).

D. Master Heater Control Panel: All internal wiring of components leading up to the terminal boards are to be tested by the manufacturer.

E. Contact Rail Preparation:

1. Steel or Aluminum-Clad (Composite) Contact Rail: Clean the side of contact rail where heater cable is to be installed in accordance with manufacturer’s instructions. Exercise care when cleaning the aluminum extrusion (composite rail) to prevent surface gouging.
2. Install heater cable elements within four (4) hours of rail surface preparation at each individual job location.

F. Installation of Heater Tape Assembly:

1. Heater circuit lengths shown on contract drawings are diagrammatic. Contractor to field verify Heater Circuit lengths in order to avoid wastage.
2. Where heater cable is installed on field side, terminate the heater cable as close as possible to either the end-approach or the traction power cable connections to the third rail. Do not install heater cable over end-approach, power cable connections or expansion joint.
3. Where heater cable is installed on rail side, terminate the heater cable as close as possible to the end-approach of the contact rail. The cables for connections and power termination on either side shall be routed to the field side for continuation of circuits and shall be secured safely without any slack to avoid their interference with rail or equipment movement on the rail side.
4. The preferred installation location for the heater cable is on the side of the rail web as close as possible to the underside of the rail head, to maximize transfer of heat from the heater cable into the rail head. However, install at the location as indicated on the drawings. Make sure that the complete heater assembly does not interfere with operation of collector shoe or contact rail cover.
5. Install the fiberglass channel and clip system to provide intimate contact between the heater element and the contact rail. Mechanical strain relief clamps shall be used along with abrasion pads when going around rail splice bars, element ends and protrusions/burrs (Do not use fiberglass channel at these locations).
6. Provide heater cable lengths in accordance with approved shop drawings.
7. Provide special abrasion pads for protection of the heater cable at any protrusion or burrs on rail and splice plates. Do not install fiberglass channel on such locations.
8. Provide all required heater cable lengths for the particular contact rail site's requirements.
9. Route power lead wires away from the head of the rail and secure to prevent damage by passing trains.

3.02 FIELD QUALITY CONTROL

A. General Requirements:

1. Conduct field testing and inspection of each sub-system (installed heater cable assembly, controllers, etc.) to ensure proper operation of equipment provided.

B. Field Inspection:

1. Prior to field testing, check equipment installation, including verification of the following:
   a. Integrity of exothermic welds to contact rail and running rail.
   b. Tightness of connections for control, power and ground wiring.
   c. Measure insulation resistance of wire using 1000V DC megger between heater conductors and contact rail. Must be greater than 1000 megohms - ft.
   d. Adequate contact between heater cable assembly (fiberglass channel) and contact rail.
   e. Adjustment of pick-up current of each magnetic current relay.
   f. Adjustment of time-delay pick-up time for each time-delay relay.
   g. Proper operation of door safety interlocking in track-side heater control panel.
   h. Visual examination for quality of finish and absence of burrs, sharp edges and cracks.

i. Dimensional check of at least 3 clips per 1000 chosen at random according to manufacturing drawing tolerances.

C. Field Testing:

1. Furnish equipment required to perform tests. Prior to insulation resistance tests, isolate the heater circuit. Conduct tests in the presence of the WMATA Engineer.

   a. Provide services of manufacturer's engineering representative and supporting field crew.

   b. Prior to insulation resistance tests, disconnect instruments and equipment which might be damaged during such tests. Conduct tests in presence of the WMATA Engineer.

   c. Submit test procedure and results for approval and perform approved tests. Do not perform tests without approved test procedure. Schedule all test through the WMATA Engineer.

   d. Perform insulation resistance test of 60-second duration on all equipment. For equipment rated 150-750V, the test voltage shall be 1000V. The insulation resistance shall be the kV rating plus one mega ohm, but not less than the minimum value recommended by the manufacturer.

   e. A minimum of 3 heater samples out of each 10,000 ft. of heater cable production shall be subjected to Power Output Test (IEEE 515 4.11). If any sample has a power output value less than 95 percent of 30 watt/ft. , that particular production run shall be considered rejected by WMATA. Retests may be made at no additional cost to WMATA.

   f. Continuity Check

   g. Perform testing on control, interlocking, and supervisory indication circuits, including interconnections between equipment.

   h. Energize and test each heater circuit.

D. Zone (trackside) heater control panel, fuse box disconnects, master heater control panel and remote heater controller:

1. Verify that wiring is in accordance with approved wiring diagrams.

2. Check wiring for accuracy, open circuits, short circuits, ground connections and insulation integrity by means of high-potential, continuity and operational tests.

3. Subject wiring to high-potential test of 2,500 volts, 60 Hertz to ground for one minute.

END OF SECTION

SECTION 34 24 21

CONTACT RAIL INSULATOR ASSEMBLY

PART 1 - GENERAL

1.01 RELATED DOCUMENTS

A. Drawings and general provisions of the Contract, including General and Supplementary Conditions and Division 01 Specification Sections, apply to this Section.

1.02 SUMMARY

A. Section Includes: fabricating, testing, and furnishing fiber glass contact rail insulator assemblies.

B. Related Requirements:

1. Section 34 24 20 Contact Rail Cable Connector Assembly for Traction Power
2. Section 34 24 22 Contact Rail Protection Cover Assemblies
3. Section 34 24 24 Contact Rail Anchor Assembly
4. Section 34 24 27 Composite Contact Rail System Installation
5. Section 34 24 19 Contact Rail and Appurtenances for Traction Power
6. Section 34 24 19.16 Wire and Cable for Traction Power

1.03 PRICE AND PAYMENT PROCEDURES

A. Measurement and Payment Procedures:

1. Compensation for work specified in this section will be made in the following manner:
   a. Materials: Lump sum, no separate measurement.

1.04 REFERENCES

A. Reference Standards:

1. ASTM A47 - Standard Specification for Ferritic Malleable Iron Castings.
2. ASTM A153 - Standard Specification for Zinc Coating (Hot-Dip) on Iron and Steel Hardware.
3. ASTM A164 - Standard Specifications for Electrodeposited Coatings of Zinc on Steel.
4. ASTM D149 - Standard Test Method for Dielectric Breakdown Voltage and Dielectric Strength of Solid Electrical Insulating Materials at Commercial Power Frequencies.
5. ASTM D229 - Standard Test Methods for Rigid Sheet and Plate Materials Used for Electrical Insulation.
6. ASTM D256 - Standard Test Methods for Determining the Izod Pendulum Impact Resistance of Plastics.
7. ASTM D495 - Standard Test Method for High-Voltage, Low-Current, Dry Arc Resistance of Solid Electrical Insulation.

8. ASTM D570 - Standard Test Method for Water Absorption of Plastics
9. ASTM D638 - Standard Test Method for Tensile Properties of Plastics.
10. ASTM D648 - Standard Test Method for Deflection Temperature of Plastics Under Flexural Load in the Edgewise Position.
11. ASTM D695 - Standard Test Method for Compressive Properties of Rigid Plastics.
12. ASTM D790 - Standard Test Methods for Flexural Properties of Unreinforced and Reinforced Plastics and Electrical Insulating Materials.
13. ASTM D2000 - Standard Classification System for Rubber Products in Automotive Applications.
14. ASTM D2303 - Standard Test Methods for Liquid-Contaminant, Inclined-Plane Tracking and Erosion of Insulating Materials.
15. ANSI B4.1 - Preferred Limits and Fits for Cylindrical Parts.
16. ASME B18.2.1 - Square, Hex, Heavy Hex, and Askew Head Bolts and Hex, Heavy Hex, Hex Flange, Lobed Head, and Lag Screws, (Inch Series).
17. ASME B18.2.2 - Nuts for General Applications: Machine Screw Nuts, Hex, Square, Hex Flange, and Coupling Nuts (Inch Series).
18. NEMA C29.1 - Test Methods for Electrical Power Insulators.
19. NEMA C29.5 - Wet-Process Porcelain Insulators - Low- and Medium-Voltage Types.
20. UL 94 - UL Standard for Safety Tests for Flammability of Plastic Materials for Parts in Devices and Appliances - Sixth Edition.

1.05 SUBMITTALS

A. Shop Drawings:

1. The Contractor shall submit for approval shop drawings for fabrication of the component and assemblies of the contact rail insulators, showing tolerances for all dimensions. No fabrication or manufacture shall be performed prior to drawing approval.

B. Samples:

1. One complete insulator assembly for each type.

C. Documentation:

1. Certification that all insulator assemblies furnished meet or exceed specified requirements.
2. Detailed engineering data on materials used in the manufacture of insulator assemblies.
3. Fabrication details.
4. Name of proposed independent testing laboratory.
5. Detailed description of quality control program. Work performed prior to approval is undertaken at the Contractor's risk.
6. Calibration certificates for quality control testing equipment.
7. Certified test reports. Submit no later than seven days after completion of tests.
8. Method of packaging. Submit prior to packaging and shipping.

1.06 QUALITY ASSURANCE

A. Testing:

1. Perform specified testing by a nationally recognized independent testing laboratory at no additional cost to WMATA.
2. The Contractor shall notify the engineer fourteen (14) days in advance of the commencement of testing, including preparation of the test equipment for testing. Testing shall be performed in the presence of the Engineer unless otherwise approved by the Engineer in writing.

B. General testing:

1. Randomly select a minimum of one percent of each production lot of 500 insulators of each type as test specimens.
2. Subject specimens to the following tests:
   a. Electrical resistance test:
      1) Procedure:
         a) Immerse each specimen in water at room temperature.
         b) After 70 hours, remove and dry thoroughly.
         c) Provide complete contact by use of wet clay pads on top and bottom of specimen.
         d) Measure resistance to each specimen with 1,000-volt dc megohms meter or other approved device.
      2) Acceptance criteria:
         a) Electrical resistance: Not less than eight megohms.
         b) If one insulator of a lot fails, entire lot will be rejected.
   b. Impulse withstand voltage test.
      1) Procedure: In accordance with NEMA C29.1.
      2) Acceptance criteria:
         a) Dry withstand voltage: 30 kV at 60 Hertz for one minute
         b) Wet withstands voltage: 20 kV at 60 Hertz for ten seconds.
         c) If one insulator of a lot fails, the entire lot will be rejected.
3. Insulators used as test specimens prohibited as part of quantity furnished.

C. Fiber Glass Insulators:

1. Material testing:

TEST ITEM:	**PROCEDURE:**	**ACCEPTANCE CRITERIA:**
1. Arc Resistance:	ASTM D495	180 Seconds
2. Dielectric Strength:	ASTM D149 Short Time Test	100 Volts per mil
3. Water Absorption:	ASTM D570, 24 Hours	Weight Increase: 0.3 Percent Maximum
4. Flammability	UL 94	Class 94V-O
5. Flame Resistance:	ASTM D229, Method II	Ignition Time: 80 Seconds Minimum.Heat Burning Time: 60 Seconds Maximum.
6. Heat Distortion:	ASTM D648	Deflection Temperature 390F at 265 psi
7. Izod impact:	ASTM D256 Method A	Average Impact strength:

		16 foot-pounds per width of specimen.
8. Flexural Strength:	ASTM D790	24,000 psi
9. Tensile Strength:	ASTM D638	12,000 psi
10. Compressive Strength:	ASTM D695	20,000 psi
11. Tracking Resistance:	ASTM D2303	Time to track: at 2,500 Volts ac 600 minutes

* Minimum unless otherwise specified.

2. Production testing:
   a. General Requirements:
      1) Production testing specified constitutes minimum requirements.
      2) All insulators subject to full or partial testing at the discretion of the Engineer.
      3) Insulators used for testing are not to be included in quantities furnished.
      4) All facets of production testing, particularly location of facility and repair, capacity and calibration of test equipment, subject to approval.
      5) Notify Engineer fourteen calendar days prior to all scheduled testing dates.
      6) If one insulator of a lot fails, the entire lot will be rejected.
   b. Randomly select a minimum of one percent of each lot of 500 insulators as test specimens.
   c. Load test:
      1) Procedure:
         a) Mount 50% of the specimens on a rigid vertical support with centerline of holes on a horizontal plane.
         b) Mount 50% of the specimens on a rigid vertical support with centerline of holes on a vertical plane.
         c) Vertically apply a steady, even, downward pressure on the insulator head until it fails.
         d) Record pressure being exerted when first crack occurs in specimen.
         e) Record pressure being exerted when specimen fails.
      2) Acceptance criteria:
         a) Withstand: to first crack: 1,200 pounds minimum; to failure: 2,400 pounds minimum.
   d. Compressive load test:
      1) Procedure:
         a) Mount insulator on flat horizontal surface.
         b) Mount steel plate one-inch thick by 4-1/2 inches diameter on top of insulator.
         c) Conduct test in accordance with ASTM D695.
      2) Acceptance criteria:
         a) Withstand: to first crack: 10,000 pounds minimum; to failure: 20,000 pounds minimum.
   e. Dielectric strength test:
      1) Procedure:
         a) ASTM D149, Short-time Test.
      2) Acceptance criteria:
         a) Dielectric strength: perpendicular chair 100 volts per mil; perpendicular cap: 100 volts per mil.
   f. Insulators used for testing are not to be included in quantities furnished.

PART 2 - PRODUCTS

2.01 PERFORMANCE REQUIREMENTS

A. Furnish contact rail insulator assembly in accordance with the following requirements:

1. General Requirements:
   a. New and undamaged.
   b. Symmetrical
   c. Free of cracks, voids, air pockets, lamination, metallic substances or other defects rendering them unsuitable for intended service.
   d. Meeting or exceeding acceptance criteria of specified tests.
   e. Indelibly marked on underside with model number and identification of manufacturer.
   f. Rated for a nominal voltage of 750 volts dc.
   g. Minimum creepage distance over external surface of insulator from energized metal components to ground or to insulator fasteners: Eight inches minimum.
   h. Resistant to weathering and sudden changes in atmospheric temperature from plus 150F to minus 20F.
   i. Impervious to moisture, acid and alkali.
   j. Suitable for use on wood ties and for direct fixation to concrete invert.
   k. Color: Uniform gray matching sample available from the Engineer.
   l. Designed for composite rail specified in Section 34 24 19 (05661) with free-end-to-anchor distance of 500 feet and temperature range of plus 150F to minus 20F.
   m. Compatible with protection cover assemblies specified in Section 34 24 22 (16124) - Contact Rail Protection Cover Assembly.

2. Fiber Glass Insulators:
   a. Polyester resin reinforced with fibrous glass and inert fillers.
   b. Compression-molded.
   c. Appearance: Smooth and uniform.
   d. Dimensions: As shown.
   e. Tolerance: Plus-or-minus 1/32-inch.

PART 3 - EXECUTION (not used)

END OF SECTION

SECTION 34 24 22

CONTACT RAIL PROTECTION COVER ASSEMBLIES

PART 1 - GENERAL

1.01 RELATED DOCUMENTS

A. Drawings and general provisions of the Contract, including General and Supplementary Conditions and Division 01 Specification Sections, apply to this Section.

1.02 SUMMARY

A. Section Includes: designing, fabricating, testing and furnishing contact rail protection cover assemblies, including expansion joint protection cover assemblies.

B. Related Requirements:

1. Section 34 24 19 Contact Rail and Appurtenances for Traction Power.
2. Section 34 24 21 Contact Rail Insulator Assembly for Traction Power.
3. Section 34 24 24 Contact Rail Anchor Assembly for Traction Power.
4. Section 34 24 27 Contact Rail System Installation for Traction Power.
5. Section 34 24 19.16 Wire and Cable for Traction Power.
6. Section 34 24 19.10 Constant Wattage Contact Rail Heat Tape System

1.03 PRICE AND PAYMENT PROCEDURES

A. Measurement and Payment Procedures:

1. Compensation for work specified in this section will be made in the following manner:
   a. Material - Lump sum, no separate measurement.

1.04 REFERENCES

A. Standard Drawings:

1. DD-TW-CR-013, Composite Rail with Type A Protection Cover.
2. DD-TW-CR-014, Type A Protection Board Cover Assembly – Details and Sections.
3. DD-TW-CR-015, Composite Rail with Type B Protection Cover.
4. DD-TW-CR-016, Type B Protection Board Cover Assembly – Details and Sections.

B. Reference Standards:

1. ASTM - A123 - Standard Specification for Zinc (Hot-Dip Galvanized) Coatings on Iron and Steel Products.
2. ASTM - A153 - Standard Specification for Zinc Coating (Hot-Dip) on Iron and Steel Hardware.
3. ASTM - A313 - Standard Specification for Stainless Steel Spring Wire.

4. ASTM - F3125/F3125M - High Strength Structural Bolts, Steel and Alloy Steel, Heat Treated, 120 ksi and 150 ksi min Tensile Strength, Inch and Metric Dimensions.
5. ASTM - B633 - Standard Specification for Electrodeposited Coatings of Zinc on Iron and Steel.
6. ASTM - D149 - Standard Test Method for Dielectric Breakdown Voltage and Dielectric Strength of Solid Electrical Insulating Materials at Commercial Power Frequencies.
7. ASTM - D229 - Standard Test Methods for Rigid Sheet and Plate Materials Used for Electrical Insulation.
8. ASTM - D256 - Standard Test Methods for Determining the Izod Pendulum Impact Resistance of Plastics.
9. ASTM - D570 - Standard Test Method for Water Absorption of Plastics.
10. ASTM - D1499 - Standard Practice for Filtered Open-Flame Carbon-Arc Exposures of Plastics.
11. ASTM - E84 - Standard Test Method for Surface Burning Characteristics of Building Materials.
12. ASTM - G23
13. SSPC-SP-6 - Commercial Blast Cleaning

1.05 SUBMITTALS

A. Submit the following for review in accordance with the Division 1 and with the additional requirements as specified for each.

1. Shop Drawings:
   a. The Contractor shall in accordance with Division 1 submit for approval shop drawings showing the design and fabrication of contact rail protection cover assembly.
2. Documentation:
   a. Certification that protection cover assemblies furnished meet or exceed specified requirements.
   b. Detailed engineering data on materials used in manufacture of protection covers.
   c. Fabrication details.
   d. Name of proposed testing laboratory.
   e. Detailed description of quality control Program. Work performed prior to approval is undertaken at the Contractor's risk.
   f. Calibration certificates for quality control testing equipment.
   g. Certified test reports. Submit no later than seven days after completion of tests.
   h. Method of packaging. Submit prior to packaging and shipping.

1.06 EXTRA MATERIALS

A. Furnish extra materials, from the same product run, that match products installed and that are packaged with protective covering for storage and identified with labels describing contents.

1. Provide spare parts and/or equipment for no less than 10% of new items.

1.07 QUALITY ASSURANCE

A. Testing: Have specified testing performed by a nationally recognized testing laboratory at no additional cost to the WMATA. The Contractor shall notify the Engineer fourteen (14) days in advance of the commencement of testing, including preparation of the test equipment for testing. Testing shall be performed in the presence of the Engineer unless otherwise approved by the Engineer in writing.

B. Material testing: Prior to fabrication, furnish one test specimen for performance of the following tests:

1. Water absorption test:
   a. Procedure: Test in accordance with ASTM D570.
   b. Acceptance criteria: Maximum absorption rate not exceeding 0.50 percent in 24 hours.

2. Flammability tests:
   a. Flame resistance:
      1) Procedure: Test in accordance with ASTM D229.
      2) Acceptance criteria: Maximum burning time: ten seconds.
   b. Flame spread:
      1) Procedure: Test in accordance with ASTM E84.
      2) Acceptance criteria:
         a) Flame spread: UL-listed, Class A Incombustible with classification not exceeding 25.
         b) Chlorine content: Not exceeding that which will emit more than 10 ppm.

3. Dielectric test:
   a. Procedure: Test in accordance with ASTM D149, Short Time Method.
   b. Acceptance criteria: Not less than 250 volts per mil.

C. Type testing: Prior to fabrication, furnish five rail protection cover assemblies of each type and five expansion joint Type A protection cover assemblies with brackets set at widest spacing shown, as test specimens for performance of all specified tests on contact rail protection cover assemblies and specified mechanical load tests on expansion joint protection cover assemblies.

1. Mechanical load test:
   a. Procedure: Perform the following in the order given:
      1) Support a 20-ft length of protective cover at 5-ft intervals with support brackets simulating an actual field installation.
      2) Static load test:
         a) Use 250-pound weight with bottom measuring six inches by twelve inches.
         b) Place weight on protection cover at mid-point between any two supports.
         c) One cycle consists of applying weight to assembly for 30 seconds, removing it, and reapplying it 60 seconds later.
         d) Test duration: Fifty cycles. c) Impact resistance test: Use 250-pound weight with bottom measuring 18 inches square. Drop weight from height of 18 inches onto portion of protection cover directly above centerline of rail and directly above bracket. Subsequently, drop weight from height of 8 inches onto point on protection cover midway between two adjacent support brackets.
   b. Acceptance criteria:
      1) Maximum permissible deflection at centerline of rail: 1-½ inches, at all times.
      2) No splits, cracks breaks or points of stress.
      3) Permanent deformation: Not exceeding 1/8 inch.
      4) No violation of clearance envelope shown.

2. Insulation resistance test:
   a. Procedure:
      1) Conduct after mechanical load test.
      2) Measure resistance between a point in contact with rail and a point on surface of protection cover assembly with 1,000- volt dc megohm meter.
   b. Acceptance criteria: Resistance: 1,000,000 ohms minimum. c.Longevity test:
      1) Procedure:
         a) Expose test specimens to light and water in accordance with ASTM G23 and ASTM D1499.
         b) Total exposure time: 3,600 hours.
         c) With 1,000-volt dc megohm meter, test insulation resistance through thinnest portion of protection cover.

2) Acceptance criteria:
   a) No visible evidence of deterioration.
3) Resistance: 1,000,000 ohms minimum.

3. Izod impact strength test:
   a. Procedure:
      1) Perform after longevity test in accordance with ASTM D256, Method A.
   b. Acceptance criteria:
      1) Average izod impact strength: Four foot-pounds per inch of width.

4. Production testing:
   a. General requirements:
      1) Production testing specified constitutes minimum requirements.
      2) All components subject to full or partial testing at the discretion of the Engineer.
      3) Items used for testing not to be included in quantities furnished.
      4) All facets of production testing, particularly location of facility and repair, capacity and calibration of test equipment, subject to approval.
      5) Notify Engineer 14 calendar days prior to all scheduled testing dates.
   b. Procedure:
      1) Select one percent of protection covers produced in such a way that each group of five specimens represents identifiable lots of 500 lengths of protection cover and 1500 support brackets.
      2) Subject test specimens to specified mechanical load and resistance rests specified under type testing.
   c. Acceptance criteria:
      1) As specified for type testing for mechanical load and resistance.
      2) If one protection cover assembly of a lot fails to meet requirements, test additional 10 specimens from same lot. If one assembly of additional specimens fails to meet specified requirements, entire lot will be rejected.

PART 2 - PRODUCTS

2.01 SYSTEM DESCRIPTION

A. Type A: is full protection cover for installation in underground locations.

B. Type B: is a top protection cover for installation in at-grade locations to accommodate the contact rail heating system.

2.02 PERFORMANCE REQUIREMENTS

A. Design: Design protection cover assembly to meet the following requirements:

1. Prevention of accidental contact with energized rail components.
2. Assurance of unimpeded passage of current collector mounted on transit vehicle.
3. Resistance to sagging produced by intrinsic weight or external loads and forces.
4. Ease of dismounting and remounting without disassembly of support bracket. Fasteners to be easily removable and reusable.
5. Configuration:
   a. Similar to configuration shown.
   b. Cover not to be integral part of support bracket.
   c. Basic geometry of cover, curved or chorded.
   d. Fabricated in 10-foot lengths.

e. Continuous and uniform. Gaps at support brackets not exceeding 1/16 inch.
f. Support brackets at three-foot four-inch intervals, for Type "B" protection cover and at five-foot intervals for Type "A" protection cover, and as shown.
g. Arrangement of brackets at expansion joints as shown.
h. Assembly to lie within clearance envelope shown.

6. Compatible with the composite contact rail specified in Section 34 24 19 (05661).

B. Material: Fabricate protection covers of material meeting the following requirements:

1. Glass-reinforced plastic.
2. No separation or warpage under service conditions during 30-year life expectancy.
3. Flame spread, flame resistance, chlorine content, water absorption and dielectric strength: In accordance with specified testing.
4. Outer surface coated with polyurethane paint, 1.5 mils minimum dry film thickness.
5. Color: Gray, to match specimen available from the Engineer.

C. Support Brackets: Furnish support brackets meeting the following requirements:

1. Design: Two-piece consisting of bracket and clamp as shown.
   a. Configuration: Compatible with protection cover and with composite contact rail specified in Section 05661.
2. Material: Same as that of protection cover.

D. Nuts, Bolts, and Miscellaneous Hardware:

1. Material:
   a. All nuts, bolts, and flat washers shall be manufactured in accordance with ASTM A325.
   b. The dimensional data and type hardware for all nuts, bolts and miscellaneous parts shall be recommended by the manufacturer. All steel bolts, nuts, screws and washers shall be galvanized as specified.
   c. Spring washers shall be manufactured in accordance with the requirements of ANSI B18.21.1.
   d. Hair pin cotter pins shall conform to the requirements of ASTM A313, Stainless Steel 304.
2. Galvanizing:
   a. All parts to be galvanized shall be galvanized after manufacture. Unless otherwise specified, parts to be galvanized shall be coated in accordance with the requirements of ASTM A123.
   b. Bolts and miscellaneous hardware shown or specified to be galvanized shall be coated in accordance with ASTM A153 or alternate method in accordance with ASTM B633 Type I SC-2 for threaded items and SC-3 without threads.
   c. Before galvanizing, the finished parts shall be pickled or sandblasted and the scale and adhering impurities removed. The pickling shall be done in properly diluted sulfuric acid, after which the parts shall be thoroughly cleaned in running cold water. Sandblasting shall meet or exceed Steel Structures Painting Council SSPC-SP-6, except that the maximum grit size shall be SAE No. G-18. The parts shall then be immersed in a solution of zinc chloride or hydrochloric acid. Immediately following thorough drying, the parts shall be dipped into the zinc bath before corrosion starts again.

PART 3 - EXECUTION (not used)

END OF SECTION

SECTION 34 24 23

WIRE CONNECTION ACCESSORIES

PART 1 - GENERAL

1.01 DESCRIPTION:

A. This section specifies providing wire-connection accessories, such as connectors, terminal lugs and fittings, bundling straps, insulating tape and resin.

1.02 QUALITY ASSURANCE:

A. Qualifications: Select a manufacturer who is engaged in production of similar wire connection accessories.

B. Codes, Regulations, Reference Standards and Specifications:
1. Comply with codes and regulations of the jurisdictional authorities.
2. National Electrical Code (NEC).
3. UL: 486A, Wire Connectors and Soldering Lugs for Use with Copper Conductors.
4. American Standards of Testing and Materials (ASTM): D149-97a, Standard Test Method for Dielectric Breakdown Voltage and Dielectric Strength of Solid Electrical Insulating Materials at Commercial Power Frequencies; D257-99, Standard Test Methods for DC Resistance or Conductance of Insulating Materials; D412-98a, Standard Test Methods for Vulcanized Rubber and Thermoplastic Rubbers and Thermoplastic Elastomers-Tension; D570-98, Standard Test Method for Water Absorption of Plastics; D638-00, Standard Test Method for Tensile Properties of Plastic; D696-98, Standard Test Method for Coefficient of Linear Thermal Expansion of Plastics Between -30°C and 30°C with a Vitreous Silica Dilatometer; D792-00, Standard Test Methods for Density and Specific Gravity (Relative Density) of Plastics by Displacement; D1000-99, Standard Test Method for Pressure-Sensitive Adhesive-Coated Tapes Used for Electrical and Electronic Applications; D1518-85(1998)e1, Standard Test Method for Thermal Transmittance of Textile Materials; D5034-95, Standard Test Method for Breaking Strength and Elongation of Textile Fabrics (Grab Test); D5035-95, Standard Test Method for Breaking Force and Elongation of Textile Fabrics (Strip Method); D2240-00, Standard Test Method for Rubber Property-Durometer Hardness; and G21-96, Standard Practice for Determining Resistance of Synthetic Polymeric Materials to Fungi.
5. American National Standards Institute (ANSI): C119.1, Sealed Insulated Underground Connector System 600V
6. ITS: Directory of ITS Listed Products.

C. Source Quality Control:
1. Connectors, terminal lugs and fittings listed, per referenced UL or ITS directory.
2. Factory testing: Submit certified copies of test report for cable splice and tap-insulation/sealing kits as specified.

1.03 SUBMITTALS:

A. Submit the following for approval in accordance with the General Requirements and with the additional requirements as specified for each:
   1. Shop Drawings.
   2. Certification.

1.04 PRODUCT DELIVERY, STORAGE AND HANDLING:

A. Mark each item in accordance with applicable reference standard.

B. Ship each unit securely packaged and labeled for safe handling in shipment and to avoid damage.

C. Store products in secure and dry storage facility.

PART 2 - PRODUCTS

2.01 PRODUCTS AND MATERIALS:

A. Connectors, Terminal Lugs and Fittings:
   1. In accordance with UL 486A.
   2. For 10AWG and smaller conductor cable: Tin-plated copper pressure connectors with nonflammable, self-extinguishing insulation grip with temperature rating equal to that of conductor insulation.
   3. For 8AWG to 4/0 AWG conductor cable: Tin-plated copper compression connectors and terminal lugs with nylon insulating sleeve for insulation grip.
   4. For 250 Kcmil and larger conductor cable: Long-barrel, double-compression tin-plated copper connectors and terminal lugs with two-hole pad.
   5. For multiple-conductor cable: Watertight aluminum fittings with stainless-steel pressure ring and set screws or compression cone for grounding of aluminum sheath of MC Cable.

B. Bundling Straps:
   1. Self-locking steel barb on one end, with tapered strap of self-extinguishing nylon, temperature rating minus 40F to plus 185F.
   2. For outdoor use: Ultraviolet-resistant.

C. Insulating Tape:
   1. Plastic tape: Vinyl plastic tape with rubber-based pressure-sensitive adhesive, pliable at zero degree F with the following minimum properties when tested in accordance with ASTM D1000-99:
      a. Thickness: 8.5 mils.
      b. Breaking strength: 20 pounds per inch width.
      c. Elongation: 200 percent.
      d. Dielectric breakdown: 10,000 volts.
      e. Insulation resistance, indirect method of electrolytic corrosion: 1,000,000 megohms.
   2. Rubber tape: Silicone-rubber tape with silicone pressure-sensitive adhesive, with the following minimum properties when tested in accordance with ASTM D1000-99:
      a. Thickness: 12 mils.
      b. Breaking strength: 13 pounds per inch width.
      c. Elongation: 525 percent.

d. Dielectric breakdown: 13,000 volts.
e. Insulation resistance, indirect method of electrolytic corrosion: 1,000,000 megohms.

3. Arc proof tape: Flexible, coated one side with flame-retardant flexible elastomer, self-extinguishing, non-combustible, with the following minimum properties:
   a. Thickness, ASTM D1000: 30 mils.
   b. Breaking strength, ASTM D5034-95 and D5035-95: 50 pounds per inch width.
   c. Thermal conductivity, ASTM D1518-85: 0.0478 BTU per hour per square foot per degree F.
   d. Electrical arc resistance: Withstand 200 amperes arc for 30 seconds.
4. Glass tape: Woven-glass fabric tape with pressure-sensitive thermosetting adhesive, with the following minimum properties when tested in accordance with ASTM D1000-99:
   a. Nominal width: 3/4 inch.
   b. Thickness: Seven mils.
   c. Breaking strength: 170 pounds per inch width.
   d. Elongation: Five percent.
   e. Dielectric breakdown: 2,500 volts.
   f. Insulation resistance, indirect method of electrolytic corrosion: 5,000 megohms.

D. Epoxy Resin: Suitable for insulating and moisture sealing cable splices, with the following minimum properties:
1. Dielectric strength, ASTM D149-97a: 400 volts per mil.
2. Volume resistance, ASTM D257-99: 2.8 x 10^{15} ohm per centimeter cube at 30C.
3. Water absorption, ASTM D570-98:
   a. 0.193 percent in 24 hours at 23C.
   b. 0.62 percent in 24 hours at 53C.
4. Tensile strength, ASTM D638-00: 8,000 psi.
5. Elongation, ASTM D638-00: 2.4 percent.
6. Coefficient of expansion, ASTM D696-98: 6.8 X 10-5 inch per inch per degree C.

E. Cable splice and tap-insulation/sealing kit: Suitable for use on 600-volt, 90C cables, material compatible with cable insulation and jacket, meeting the seal test requirements of ANSI C119.1.
1. Heat-shrinkable tubing or wraparound heat-shrinkable sleeve: approved per referenced UL or ITS directory, flame-retardant, corrosion-resistant thick-wall tubing with factory-applied sealant for field insulation on in-line splices and taps or wraparound-type sleeve for retrofit installation on existing splices and taps to provide a watertight seal and insulating encapsulation, with the following additional requirements:
   a. Material: Cross-linked polyolefin.
   b. Shrink ratio: 3 to 1 minimum.
   c. Physical properties:
      1) Ultimate tensile strength: 2,350 psi, ASTM D412-98a.
      2) Ultimate elongation: 350 percent, ASTM D412-98a.
      3) Hardness, Shore D: 42, ASTM D2240-00.
      4) Water absorption: 0.050 percent, ASTM D570-98, Method 6.1.
      5) Specific gravity: 1.28, ASTM D792-00.
   d. Electrical properties:

1) Dielectric strength: 450 volts per mil, ASTM D412-98a.
2) Volume resistivity: 1 x 10^{14} ohm cm, ASTM D257-99.

e. Thermal properties:
1) Continuous operating temp.: -55C to +135C.
2) Air oven aging (14 days at 175C):
a) Tensile strength: 2,680 psi.
b) Elongation: 375 percent.
3) Low temp. Flexibility (4 hours at -55C): No cracking when flexed.
4) Heat shock (4 hours at 250C): No cracking, flowing or dripping.

f. Chemical properties:
1) Corrosively: Non-corrosive.
2) Fungus resistance: Non-nutrient, ASTM G21-96.
3) Flammability: Self-extinguishing.

PART 3 - EXECUTION

3.01 SPLICES AND TERMINATIONS:

A. Make wire and cable splices in outlet, junction or pull boxes, in cable troughs or in equipment cabinets. Splices in conduit are prohibited.

B. Secure connectors or terminal lugs to conductor so as to engage all strands equally.

C. Do not rupture insulation nor expose bare conductors.

D. Install compression connectors and terminal lugs using tools and pressure recommended by manufacturer. Indent mark connectors and terminal lugs with number of die used for installation.

E. Apply anti-corrosion joint compound to connectors, terminal lugs and bolting pads before installation.

F. Wrap ½-lapped layer of arc proof tape, glass tape overall on cable splices installed in air tunnels, ducts and shafts.

G. Install terminal fittings on multiple-conductor cable in accordance with manufacturer's recommendation. Completely seal cable from moisture.

H. On cable splices, taps and terminations in manhole hand hole and outdoor junction and pull boxes, cover connectors with electrical putty, wrapped with three layers of plastic tape or final layer of rubber tape and then install watertight encapsulation as follows and under the supervision of kit manufacturer's representative or using a factory-certified installation technician, proficient in field installation of heat-shrinkable sealing kits.
1. Use heat-shrinkable tubing for encapsulation of new splices, taps and terminations.
2. Use wraparound-type heat-shrinkable sleeve for encapsulation of existing splices, taps and terminations.

3.02 CATHODIC PROTECTION SPLICES AND TERMINATIONS:

A. For splices made in aboveground cable, use compression connectors covered with electrical putty, wrapped with three layers of plastic tape and final layer of rubber tape.

B. Install compression terminal lugs using tools and pressure recommended by manufacturer. Indent mark terminal lugs with number of die used for installation.

C. For splices made in direct-burial cable, use thermite weld sealed with cast epoxy-resin encapsulation.

3.03 INSPECTION:

A. Have splices in direct-burial cable for stray current and cathodic protection inspected by the Engineer before backfilling.

B. Have splices and taps in manholes, hand holes and outdoor junction and pull boxes inspected by the Engineer or the manufacturer's representative, when available.

END OF SECTION

SECTION 34 42 13

ATC BLOCK DESIGN

PART 1 - GENERAL

1.01 SECTION INCLUDES

A. This Section specifies the design criteria and basic information which the Contractor shall use in preparing the ATC Block Design for the portions of the Metro Rail Automatic Train Control (ATC) System included in this Contract and the responsibilities of the Contractor for simulating, implementing and documenting this block design.

1.02 RELATED SECTIONS

A. Related work specified elsewhere shall include, but not be limited to, the following Sections:

1. Section 34 42 01 ATC - Abbreviations and Definitions for ATC
2. Section 34 42 04 Current Automatic Train Control System
3. Section 34 42 05 ATC - Transit Vehicle Characteristics
4. Section 34 42 17 Basic Interlocking Requirements
5. Section 34 42 18 ATC Requirements for Specific Locations
6. Section 34 42 24 ATC - Microprocessor Systems
7. Section 34 42 28 ATC - Vital Functions
8. Section 34 42 81 Basic ATC Test and Inspection Requirements
9. Section 34 42 83 ATC Train Separation Tests (Level B)
10. Section 34 42 88 ATC - Quality Assurance

1.03 QUALITY ASSURANCE

A. The Contractor shall comply with the quality requirements described in Section 34 42 88 – Quality Assurance.

B. Review and Evaluation

1. The Contractor shall conduct a detailed independent review and evaluation of the logic codes, track circuits, and location of block boundaries contained in their initial block design.

C. Review Criteria

1. The Contractor shall review their block design to confirm that the design:
   a. Meets the requirements specified for safety and headway.
   b. Uses the minimum number of blocks required to meet the Specifications.
   c. Complies with the Specifications for the location of block boundaries.
   d. Complies with the Specifications for Logic Codes.

D. Safety and Headway

1. The Contractor's review and evaluation of safety and headway shall be based upon the following:
   a. Safety.
      1) Determination that a length of unoccupied track at least equal to safe braking distance for worst-case trains is provided for every speed command in each block, utilizing the criteria for safe braking distance applied to the track profile involved.
   b. Headway.

1) Determination of the actual design profile speeds, design headways, and peak capacity headways attainable for each route connecting each station pair. Where the design headway or the peak capacity headway are not equal to or less than the upper bounds of headway specified below for each station pair, and where the design profile speeds are lower than MAS (Maximum Authorized Speed), the Contractor shall notify the Project Manager in writing.

E. Upper Bounds for Headway
1. Routes in the normal and reverse direction of traffic - 90 seconds for design headway which includes 20 second station dwell time at performance level PL1;
2. Routes using emergency crossovers - 120 seconds for design headway.

F. Any Contractor proposed increases to the headway upper bounds specified herein shall be subject to the approval by the Project Manager.

G. Train Performance Simulation
1. Model Type
a. The Contractor shall develop individual train performance models for; an ideal train, a worst-case eight-car train, and a worst-case two-car train.
1) Ideal Train
a) The model of ideal train performance shall be developed to verify that trains which accelerate and brake precisely as does an ideal train meet all the headway criteria and always obey the civil speed limits of every speed zone. The Ideal Train performance model shall be precisely determined by the following characteristics:
(1) Acceleration shall be as indicated in Part 2.02D, (Acceleration Factors) of this Section.
(2) The braking rates shall be the full-service braking rates specified in Section 34 42 05, ATC - Transit Vehicle Characteristics, (or as superseded by the Authority) as constrained by jerk rate limitations. The reaction-distance time shall be the sum of the equipment reaction time to detect and decode a more restrictive command (signal time, 0.8 sec.), plus the speed governor (overspeed detector) reaction time (0.5 sec.) and the time to remove power (1.0 sec. for speeds 40 mph or less and 0.5 sec. for speeds greater than 40 mph), plus one half the maximum brake buildup time (0.6 sec.). These values shall be used to determine the distance required for an ideal train to decelerate from one speed to a lower speed command.
(3) Ideal trains shall stop in each station using the Program Stop braking profile for the given station.
(4) The passenger load shall be crush load as specified in Section 34 42 96, ATC - Technical Appendix.
2) Worst-Case Train

a) The performance models for the eight-car and two-car Worst-Case Trains shall be precisely determined by the following characteristics:

(1) Acceleration shall be as indicated in Part 2.02D, (Acceleration Factors) of this Section.

(2) To calculate the distance that shall be allowed for a worst-case train to decelerate to obey the safety speed limit of a speed zone, the initial speed of the train shall be taken to be the greater of the ATP speed command which the train is receiving, and the actual train speed. The braking rate to be used shall be the full service braking rate specified in Section 34 42 05, ATC - Transit Vehicle Characteristics, as constrained by jerk rate limitations and degraded by 25 percent to allow for inoperative brakes on one truck of each married-pair. The train shall be assumed to run the entire reaction distance at the initial speed. The overspeed detector reaction time shall be 0.75 seconds. Power removal time and maximum brake build-up time shall be based upon speed as specified in Section 34 42 96.

(3) To calculate safe braking distance, the distance that shall be allowed for a worst-case train to stop when given a 0-mph speed command, the initial speed of the train shall be taken to be the greater of the ATP speed command which the train is receiving and the actual train speed. The braking rate to be used shall be the full service braking rate specified in Section 34 42 05, ATC - Transit Vehicle Characteristics, as constrained by jerk-rate limitations and degraded by 25 percent to allow for inoperative brakes on one truck of each married-pair. The train shall be assumed to accelerate at the maximum rate during the reaction time of the overspeed detector and during the power removal time in order to account for the possibility of a carborne automatic speed regulator failure at the time of receipt of the zero speed command. The overspeed detector reaction time shall be 0.75 seconds. Power removal time shall be based upon speed as specified in Section 34 42 96, ATC – Technical Appendix. An additional 30 feet shall be allowed in determining the safe braking distance. This is to allow for the distance between the front end of a worst-case train and its lead axle plus the distance between the rear end of the next train and its rear axle plus 10 feet for jerk limit flare-out.

2. Simulation

a. The Contractor shall simulate the performance of a train operating in either direction in response to the MAS ATP speed commands and program stop

commands, with a dwell time of 20 seconds. Safe braking distance shall be determined for each location on the simulated worst-case train's velocity-location profiles, taking into account the track and civil design characteristics, as well as the braking performance characteristics specified. The smallest theoretical headway between two trains (calculated via the train traversing the SBD portion of the control line) with the resulting velocity-location profile shall then be determined for each station pair, with the trains always separated by at least safe braking distance, and by exactly safe braking distance at one or more locations.

b. On the basis of the theoretical headway thus determined, the Contractor shall quantify the minimum headway achievable by their block design for trains operating at MAS. Where this minimum headway is larger than the upper bounds specified above in 1.03 E, the Contractor shall determine whether trains operating at reduced speeds can achieve the desired headway. The performance of trains responding to these revised speed commands shall be simulated. Safe braking distance and the theoretical minimum headways shall be determined as described above. The theoretical headways shall then be quantified into headways achievable by a block design for successive trains by operating at the indicated speeds.

c. The Contractor shall compare these headways with those specified by the Authority. If the design headway and/or peak capacity headway determined by the review described above are higher than those specified by the Authority, the Contractor shall notify the Project Manager of these discrepancies and present substantiating data to the Project Manager to show that the headways specified by the Authority cannot be attained.

d. Where a route segment included in this Contract does not begin at a passenger station, the Contractor shall include the nearest passenger station in the current METRO rail system in the simulation.

e. The Contractor shall perform a full independent check of the simulation model and all results generated from it.

1.04 SUBMITTALS

A. The Contractor shall submit the following to the Project Manager for approval:

1. A written report of the preliminary field inspection listing all potential block design problems in the areas included in this Contract within 21 days of receipt of Notice to Proceed.
2. Detailed flow charts of the block design train performance simulation models for the Project Manager's approval within 60 days of receipt of Notice to Proceed.
3. Copies of the final block design ATP Speed Command Control Line Diagrams for both traffic directions on all route segments included in this Contract, together with calculations and computerized simulation runs used to evaluate this block design within 120 days of receipt of Notice to Proceed. The calculations and simulation runs shall be suitably identified.

PART 2 - PRODUC

2.01 FUNCTIONS OF BLOCK DESIGN

A. The primary functions of the block design shall be:

1. To provide safe train operation;
2. To enable all of the required "Design" and "Peak Capacity" headways to be achieved;
3. To allow trains to travel as fast as possible, consistent with speed restrictions.

4. To allow all Performance Level speed limit speeds to be attained in both the Normal and Reverse directions of Traffic.

B. The Contractor's block design shall include such track circuit boundaries as necessary for the proper operation of the program stop and door control systems, for cross-bonding and negative propulsion return requirements, for the operation of interlockings, and, where applicable, for automatic train routing and automatic terminal operation.

C. The Contractor's block design shall facilitate the operation of trains operating under ideal and worst case performance conditions and must assume that an ideal train can become a worst-case train at any instant.

2.02 BASIC INFORMATION

A. Speed Limits

1. The civil speed limit of a speed zone shall be set for the comfort of passengers on trains and on station platforms. The safety speed limit shall be set to minimize potential passenger injury. Analysis of the block design for conformance to safety speed limits shall consider both ideal and worst-case train performance.

B. Civil Speed Limits

1. The civil speed limit on all station platform tracks shall not exceed 40 mph. The civil speed limit (in the direction approaching a station platform) for each track circuit within the programmed station stopping control limits of a station shall be the lowest ATP speed command (i.e., 40 mph, 45 mph or 50 mph) which can be applied without interfering with normal programmed station stopping at that station.
2. For all sections of track other than station areas, the civil speed limit shall be the highest ATP speed command not exceeding the civil speed limit (65 mph maximum) of the given section of track as indicated on the Contract Drawings. Civil speed limits for curves shall apply to adjacent spirals. In the case of compound curves, the connecting spiral shall be assumed to have a civil speed limit equal to the lower of the civil speed limits of the two curves.

C. Safety Speed Limits

1. For speed zones where the civil speed limit is restricted by curves, the safety speed limit, Vs shall be:

   a. $Vs = Vc\sqrt{(1 + (\frac{2}{Ea+Eu}))}$

   b. Where: Vc is the civil speed limit of the speed zone (M.P.H.);
   Ea is the actual superelevation (inches);
   Eu is the unbalanced superelevation (inches).

   c. The civil speed limit (Vc) is given on the Contract Drawings for each curve. Ea and Eu shall be as shown on the applicable trackwork drawings. Safety speed limits for curves shall apply to adjacent spirals. In the case of compound curves, the connecting spiral shall be assumed to have a safety speed limit equal to the lower of the safety speed limits of the two curves.
2. The safety speed limit where the civil speed limit is restricted by turnouts shall be set according to Table 1:

Table 1					
MAS, Civil and Safety Speed Limits Through Turnouts					
Turnout Number	Switch Rail Length	Switch Type	Speed Through Turnout - MPH		
			MAS Speed	Civil Speed Limit	Safety Speed Limit
6 Standard	11' - 0"	Straight	15	17.2	19.8
6 Guarded	16' - 6"	Curved	15	17.9	20.7
6 Equilateral	13' - 0"	Curved	22	25.3	29.2
6 Equilateral Guarded	16' - 6"	Curved	22	25.2	29.1
8 Standard	16' - 6"	Straight	22	22.7	26.3
8 Guarded	26' - 0"	Curved	22	23.9	27.6
10	19' - 6"	Curved	28	30.1	34.7
15	26' - 0"	Curved	40	45.6	52.7

D. Acceleration Factors

1. The acceleration capability of trains shall be determined by the following factors:
   a. The curvature and the grade of the section of track beneath the train, which shall be based on the actual train length and which shall consider the train as a line mass. The curve and grade resistance factors which shall be used to determine the effect of curves and grades on train motion are given in Section 34 42 05, ATC - Transit Vehicle Characteristics.
   b. The characteristics of the transit cars are given in Sections 34 42 05, ATC - Transit Vehicle Characteristics and 34 42 96 - ATC Technical Appendix.
   c. The Car Acceleration vs. Speed Tables are included in the ATC Technical Appendix (Section 34 42 96).
   d. The reaction time for power application for acceleration which shall be one second.

2.03 DECELERATION FORMULAS FOR DETERMINING SAFE BRAKING DISTANCE

A. The following system of equations shall be used in an iterative procedure to determine the Safe Braking Distance (SBD) which is the minimum distance that shall be allowed for a train to decelerate from an initial speed V(0) mph, at location L(0) feet, to a final speed of zero mph.

B. The following symbols are used in the equations of this section:

1. L(i): The location of the front end of the train after the ith computing interval.
2. V(i): The train speed (mph) after the ith computing interval.
3. A(V): Acceleration (mphps) vs. speed, V(mph), which shall be derived from the appropriate Car Acceleration vs. Speed Table(s) provided by the Authority.
4. D(V): Safety brake rate (mphps) vs. speed, V(mph) curve. The safety brake rate equals -1.65 mphps from 0 mph to 50 mph and then tapers linearly to -1.24 mphps at 75 mph.
5. G(L(I)): The weighted average of the grades, in percent grade, under a train whose front end is at location L(i). The weighting factor shall be the proportion of the train on each of the grades. Uphill grades shall be designated as positive. The factor 0.2 transforms the percent grade into acceleration or deceleration (in miles per hour per second) due to grade.

C. The safe braking distance (SBD) is defined to be comprised of two components: the reaction distance (RD) and the braking distance (BD).

D. The time for the reaction distance shall begin when a train crosses a block boundary into a block transmitting a lower (or zero) speed command. During this reaction-distance time the train shall be considered to maintain its speed while the new speed command (or lack thereof) is being detected and decoded, accelerate at maximum rate during the power removal time, and then maintain the speed reached after acceleration for half the braking buildup time.

E. The braking distance, in which the brakes are fully applied, shall follow the reaction distance.

F. A train beginning an interval at (V(i), L(i)), where V(i) is the speed and L(i) the location at the beginning of the (i+1)th interval, shall be moved forward one computing interval at a time. The length of the interval is delta t seconds. The acceleration or deceleration calculated at the beginning of the interval shall be used to determine the speed at the end of the interval, V(i+1) - V(i), and the distance traveled during the interval L(i+1) - L(i). The coordinates (V(i+1), L(i+1)) shall then be used as the beginning coordinates of the next computing interval. The procedure shall be continued until the speed after the nth computing interval, V(n), is less than or equal to zero mph. If less than zero, the location at which the train's speed equals zero shall be calculated by interpolation using the coordinates (V(n-1), L(n-1)) and (V(n), L(n)).

G. The train acceleration shall be the algebraic sum of the acceleration due to tractive effort and the acceleration due to grade. The train deceleration shall be the algebraic sum of the braking rate and the deceleration due to grade. The acceleration and deceleration due to grade shall be calculated at the beginning of each computing interval based upon the weighted average of the grades beneath the train at the beginning of that interval. The weighting factor shall be the fraction of the train length on each of the grades.

H. Reaction distance, RD, is the distance traveled during the reaction-distance time. The reaction-distance time shall be comprised of three parts:
1. Signal time, i.e., time to detect and decode a more restrictive speed command. The signal time is defined to be 2 seconds in duration.
2. Speed regulator (overspeed detector) reaction time (0.75 seconds), plus time to remove power. The time to remove power depends upon the speed of the vehicle and shall be as specified in Section 34 42 96, ATC Technical Appendix.
3. Half the maximum brake building time. Maximum brake buildup time shall be as specified in Section 34 42 96, ATC Technical Appendix.

I. During the signal time (2 seconds) of reaction-distance time the train shall maintain its initial speed V(0):
1. RD(1) (feet) = 1.467 x 2 (sec.) x V(0) (MPH)
2. The location of the train at the end of these two seconds, in feet, shall be:
   a. L(1) = L(0) + RD(1)

J. In the second part of reaction-distance time, the train shall be under full power. The first five computing intervals (delta t(i), i = 1, 2, 3, 4, 5) shall be of equal duration; the sixth computing interval, delta t(6), in this part of the reaction-distance time, shall be of equal or less duration than each of the first five intervals. The following formulas shall be used to determine the change in speed and position during this computing interval:

1. V(i+1)-V(i) = Δt(i) x[A(V(i)-0.2G(L(i))]

2. $L(i+1) - L(i) = 1.467 * \frac{V(i+1)+V(i)}{2} * \Delta t(i)$

3. RD(s) = L(7) - L(1)

K. In the third part (0.6 seconds) of reaction-distance time, the train shall maintain the speed V(7).

1. RD(3) = 1.467 x v(7) x 0.6
2. L(8) = L(7) + RD(3)
3. RD = RD(1) + RD(2) + RD(3)

L. The braking distance, BD, is defined here as the portion of the safe braking distance in which the brakes are fully applied, immediately following the reaction distance. Each computing interval in the braking distance (BD) calculations shall be 0.5 seconds, except for the last where interpolation shall be used. The following formulas shall be used to determine the change in speed and position during each computing interval. In these formulas the sign of the deceleration term, D(V), shall be negative.

1. V(i)-V(i+1) = 0.5 x [D(V(i))+0.2G(L(i))]
2. $L(i+1) - L(i) = 1.467 * \frac{V(i+1)+V(i)}{2} * 0.5$
3. If L(n) is the location at which V = 0, then:
   a. BD = L(n) - L(8) + 30.0
4. The 30.0-foot factor allows for coupler overhang and jerk rate while stopping.

M. The safe braking distance shall be the sum of the reaction distance and the braking distance:

1. SBD = RD + BD

N. To determine the distance which shall be allowed for a train to decelerate from an initial speed V(0), to a final speed limit, V, which is a more restrictive speed limit, the above formulas shall be modified as follows:

1. The train shall run the entire reaction-distance time at V(0) mph. Reaction-distance time shall depend on whether the train is an ideal train or a worst-case train. See Part 1.03G (Train Performance Simulation) of this Section.
2. At the end of reaction-distance time the brakes shall be assumed to be fully applied and the above formulas shall be used to calculate the distance required for the train to decelerate to the more restrictive speed limit.

O. The speed limit shall be the civil speed limit for ideal trains and the safety speed limit for worst-case trains.

1. The worst-case trains shall use a braking rate of -1.65 mphps from 0 mph to 50 mph tapering linearly to -1.24 mph at 75 mph.
2. The ideal train shall use the full service braking rate of -2.2 mphps from 0 mph to 50 mph tapering linearly to -1.65 mphps at 75 mph.

2.04 BASIC CRITERIA

A. Speed Control Requirements:

1. No ideal train shall exceed the civil speed limit of any speed zone.
2. No worst-case train shall exceed the safety speed limit of any speed zone.
3. Every worst-case train shall be at least safe braking distance from the upstream end of any block which is occupied or which is controlled by an interlocked signal if this signal is displaying a STOP aspect.
4. Safe Braking Distance calculations for trains located on vertical curves shall be modified and documented in a manner acceptable to the Project Manager.

B. Dwell times shall be 20 seconds for design headway and 10 seconds for peak headway.

C. Headway Requirements

1. In this section, a "station pair" is defined to be an ordered pair of successive passenger stations. The satisfaction of criteria for successive trains operating over specified routes at specified headways shall be demonstrated using models of ideal-case trains following MAS based speed command profiles for normal design headway and speed levels that may be less than MAS for peak capacity headway.
2. Normal Direction
   a. The Contractor's block design shall permit:
      1) Two 8-car ideal trains to run in the normal direction of traffic between C10 National Airport Station and C12 Braddock Station stopping at each passenger station en-route at the design headway for each station pair, with both trains receiving design profile speed commands in each block.
   b. For each station pair, design headway shall not be more than 90 seconds, and shall meet all the requirements given in the Safety Requirements and Location of Block Boundaries Parts of this Section.
3. Reverse Direction
   a. The Contractor's block design shall permit:
      1) Two 8-car ideal trains to run in the reverse direction of traffic between C10 National Airport Station and C12 Braddock Station stopping at each passenger station en-route at the design headway for each station pair, with both trains receiving design profile speed commands in each block.
   b. The design headway shall not be more than 90 seconds, achievable for successive ideal trains including 20 second station dwell time at performance level PL1. Each block shall transmit the same ATP speed command to the following train that it transmitted to the leading train when the leading train occupied that block.
   c.

D. Location of Block Boundaries

1. Basic Requirements
   a. Block boundaries and associated track circuits shall be located:
      1) To ensure compliance with safety and headway criteria;
      2) To meet the requirements for negative propulsion return current connections at traction power substations;
      3) To provide crossbonding for negative-propulsion return current equalization at designated locations,
      4) To provide for proper operation of the wayside ATC system in the vicinity of station platforms and special trackwork locations, and;
   b. Successive Block Boundaries shall never result in a track circuit length of less than 50 feet.
   c. No track circuit shall be effectively cross-bonded at both ends, nor shall any AF track circuit exceed in length 55% of the distance between a cross-bond to which it is connected and the next cross-bond.
   d. At least one of every two consecutive track circuits shall be no shorter than the reaction distance, as defined in this Section.
2. Fixed Block Boundaries

a. Fixed (mandatory) block boundaries to meet the requirements specified in 1.a.2), 1.a.3), and 1.a.4), above, are shown on the Contract Drawings at locations established by insulated rail joints, or impedance bonds associated with the ends of station platforms, or with negative propulsion return stub-ups, or with negative propulsion crossbonding stub-ups. These "fixed" block boundaries shall be located as follows:

1) A block boundary for each track shall be located at each end of every passenger station platform. The boundary shall not be less than 299 feet and not more than 300 feet from the centerline of the station platform.

2) At each interlocking, block boundaries in approach to facing point switches shall be located a minimum of 15 feet upstream from the point of switch, at the locations indicated on the Contract Drawings.

3) The Contractor's block design shall permit negative traction power-return bonding within 25 feet of the centerline of each traction power substation-return conduit stub-up. Preferably, these impedance bonds shall be located 10 feet from the negative-return conduit stub-up location, in the direction of the stub-up.

4) The Contractor's block design shall permit the installation of cross-bonding at intervals of 2000 feet (+\-50 ft) maximum wherever it is possible to provide cross-bonding within such intervals. Cross-bonding shall be provided at one end (only) of each passenger station, unless otherwise authorized in writing by the Project Manager. For the above purposes, substation return locations shall be considered as effective cross-bonding locations. The Contractor shall install impedance bonds at as many of the cross-bonding conduit locations indicated on the Contract Drawings as are required to meet the maximum cross-bonding interval limitations specified. Preferably, impedance bonds for cross-bonding purposes shall be located 10 feet from the cross-bonding conduit stub-ups, in the direction of the stub-ups, but in all circumstances the bonds shall be installed within 25 feet of the cross-bond stub-ups unless otherwise authorized in writing by the Project Manager.

3. Intermediate Block Boundaries

a. The number and location of all "intermediate" block boundary locations, i.e., additional block boundary locations necessary to meet the requirements specified in item 1.a.1) above, shall be determined by the Contractor in the manner further specified herein. (The "intermediate" block boundaries shown on the Contract Drawings, i.e., the block boundary impedance bonds with stationings shown in parentheses, are shown for illustrative purposes only and do <u>not</u> necessarily represent the number or location of block boundaries or track circuits required.)

b. A block boundary shall be located in the normal traffic direction approach to each more restrictive speed zone to slow a train traveling in the normal traffic direction. The distance from this block boundary to the beginning of the more restrictive speed zone shall be at least the larger of the following distances:

1) The distance required for an ideal train to decelerate to the civil speed limit of the more restrictive speed zone;

2) The distance required for a worst-case train to decelerate to the safety speed limit of the more restrictive speed zone.

c. The larger of the two distances specified in 3.b.1) and 3.b.2) above determines the closest allowable location for this block boundary (i.e., the "calculated location"). The actual location of the block boundary may be upstream from the calculated location up to a distance which would increase run time at MAS by two seconds compared to placing the block boundary at the calculated location.

d. Block boundaries for the normal direction of traffic shall also be used for the reverse traffic direction. Additional block boundaries shall be provided in the reverse traffic direction approach to each more restrictive speed zone to slow a train traveling in the reverse direction whenever the lack of such a boundary would increase reverse direction run time by at least 10 seconds, compared with placing a block boundary at the calculated location for the reverse direction of traffic. Where an additional block boundary is not provided, the speed of trains running in the reverse direction of traffic shall be down to the appropriate speed limit (i.e., ideal trains to the civil speed limit and worst-case trains to the safety speed limit) of the more restrictive speed zone prior to entering this speed zone.

e. A block boundary shall be located at the point of entry to a more permissive speed zone for trains traveling in the normal direction of traffic. As soon as the rear of the train, regardless of length, is clear of the more restrictive speed zone, the track circuits in the more permissive speed zone shall transmit the more permissive speed command to the train if the appropriate number of track circuits downstream are unoccupied. This block boundary may be located downstream from the end of the restricted speed zone not more than 50 feet or more than a distance which would increase run time by two seconds, compared with placing the block boundary at the end of the speed restriction. The location of this block boundary shall not be upstream from the end of the more restrictive speed zone by more than 10 feet. These criteria are also applicable for trains traveling in the reverse direction of traffic, except that the block boundary at the point of entry to a more permissive speed zone for trains traveling in the reverse direction of traffic may be located downstream from the end of the restricted speed zone not more than a distance which would increase run time by 10 seconds, compared with placing the block boundary at the end of the speed restriction.

f. A block boundary shall be located at the entrance to a more permissive speed zone for trains traveling in the normal direction of traffic per the above criteria with the following exception. Suppose a train is entering a more permissive speed zone, with speed limit V, which is followed by a more restrictive speed zone. Assume that the sum of the four distances (train length, acceleration reaction distance, brake reaction distance, deceleration distance) is greater than the length of the more permissive speed zone. If basing the braking reaction distance and deceleration distance on a speed lower than V, but more permissive than that of the previous speed zone, can reduce the sum of the four distances to less than the length of the more permissive speed zone, then a block boundary should be located at the entrance of the more permissive speed zone. Under these conditions, the ATP speed shall be limited to the highest ATP speed which results in the sum of the four distances being less than the length of the more permissive speed zone.

g. The Contractor's block design shall permit worst-case 8-car trains and ideal 8-car trains, operating automatically, to approach each crossover on each track in both the normal direction of traffic and the reverse direction

of traffic, to operate through the crossover using either route, and to be stopped automatically just beyond the crossover and clear of the trailing point of the switch in order to reverse direction manually.

h. Where the centerlines of two successive passenger stations are less than 3000 feet apart, and where the civil speed limit of the speed zone in which the 1200-foot program stop marker of the downstream station is located is higher than the maximum speed from which an ideal train can execute a programmed stop in the downstream station, a block boundary shall be located a distance upstream from the 1200-foot marker. This distance shall be that required for an ideal train, traveling at the civil speed limit upstream from the 1200-foot marker, to decelerate to the speed required to execute a programmed stop.

E. Logic Codes

1. The logic codes for each block shall be selected to provide compliance with safety and headway criteria.
2. All blocks shall have at least two ATP logic codes; one for trains entering the block in the normal direction of traffic, and one for trains entering the block in the reverse direction of traffic. In addition, if a crossover or diverging junction is within safe braking distance (as defined for the worst-case train) from the downstream end of a block, there shall be two logic codes in the given block for the direction of traffic approaching the crossover or diverging junction - one for each route through the crossover or junction.
3. Routes for Normal Direction of Traffic
   a. To calculate all logic codes associated with revenue service routes in the normal direction of traffic, the Contractor shall determine the highest speed command that can be transmitted to a train entering a given block in such a way that safe braking distance from the command speed does not exceed the combined length of each successive number of consecutive unoccupied track circuits downstream from the given block. This shall be done for each number of such track circuits, beginning with the track circuit adjacent to and downstream from the given block. Safe braking distance shall be calculated from the downstream end of the given block.
   b. MAS, the highest of the ATP speed commands, shall be transmitted as soon as the required track circuits are unoccupied. In addition, the ATP speed commands required in each block for trains to operate at a design headway and peak capacity headway shall be transmitted as soon as the required track circuits are unoccupied.
   c. A logic code shall be provided (for each direction of traffic on each track) to permit a train to make a station stop at each station platform.
   d. Intermediate speed commands shall be provided as necessary to meet specified design and operational requirements, subject to the approval of the Project Manager. This shall include speed commands for all Performance Level speed limits between successive passenger stations. In those blocks where design headway and peak capacity headway can be achieved at MAS and where there is no requirement to close in to an interlocking signal at stop, intermediate speed commands shall be provided as follows:
      1) If the MAS is 40 mph or less, at least one intermediate speed shall be provided.
      2) If the MAS is greater than 40 mph, but less than 65 mph, at least one intermediate speed shall be provided.
      3) If the MAS is 65 mph, at least two intermediate speeds shall be provided.

4) The intermediate speeds shall be selected in such a manner as to minimize speed command changes to trains running on intermediate speeds.

4. Routes for Reverse Traffic Direction and Emergency Crossovers
   a. All logic codes associated with revenue service routes in the reverse direction of traffic, or routes using an emergency crossover, shall be provided with as many intermediate speed commands as are necessary to meet the specified design and operational requirements. The intermediate speed(s) used by the reverse traffic transmitter shall be the same as the intermediate speed(s) used for normal traffic transmission to the adjacent track circuit wherever possible.
   b. Each of these speed commands shall be transmitted to a train entering a block as soon as the combined length of unoccupied track circuits downstream from the block is at least safe braking from the downstream end of that block for that speed .
   c. Intermediate speed commands shall be provided as necessary to meet specified design and operational requirements. In those blocks where design headway and peak capacity headway can be achieved at MAS and where there is no requirement to close in to an interlocking signal at stop, intermediate speed commands shall be provided.
5. Passenger Stations
   a. Where there are two or more track circuits in one station platform track, the individual track circuits shall not appear unoccupied to a train upstream of the station unless one of the following conditions exists:
      1) All track circuits within the limits of that platform are unoccupied, or
      2) The track circuit for the upstream end of the platform track is unoccupied and the train occupying the remaining track circuit(s) has been determined to be leaving the station.
   b. The determination that a train is leaving the station platform may be non-vital in origin, such as the lack of TWC reception in the platform block.
6. Routes Terminated by Turnback Point Control
   a. If a turnback point is within safe braking distance (as defined for the worst-case train) from the downstream end of a block, there shall be an additional logic code in the given block for the direction of traffic approaching the turnback point - with the turnback control at stop.
   b. Speed commands for the turnback point control at stop shall not permit a worst-case train to pass the turnback point. Speed command assignment for the turnback point control at stop shall permit all trains to clear the downstream exit of the interlocking before stopping. Speed command assignment for the turnback point control at stop shall permit an automatic programmed station stop in automatic mode where reasonable and practical.

2.05 PROGRAMS AND DOCUMENTATION

A. The Contractor shall furnish a discussion of the safe-braking distance programs and simulation programs, and shall submit the documented calculations for safe braking distance and headway for each control line to the WMATA Project Manager for approval.

PART 3 - EXECUTION

3.01 PRELIMINARY INSPECTION

A. Fixed facility locations shown on the Contract Drawings are based upon the latest design information available at the time this Contract was prepared.

B. The Contractor shall conduct a field inspection to determine the actual as-built locations of substation-return conduit, crossbonding conduit, station platforms, special trackwork, Train Control Rooms, and all other special facilities which will affect their block design, prior to commencing the block design effort.

3.02 DESIGN

A. The Contractor shall use the actual locations of station platform ends, insulated rail joints, special trackwork, crossbonding conduit stub-ups and substation return conduit stub-ups as the initial fixed points in determining the block design.

B. The remainder of the Contractor's block design shall conform to the requirements set forth in this Section, and to other special requirements set forth in these Specifications. (See Part 2.04, BASIC CRITERIA.)

C. Intermediate block boundaries shown on the Contract Drawings are for illustrative purposes only, and represent the format to be used by the Contractor when submitting their Double Line Track Plans and Panel Layouts for approval. The Contractor's approved block design shall establish the actual number and location of intermediate block boundaries.

D. The Contractor's block design effort shall include the run time between stations and headway for each control line using the four performance level speed limits for trains traveling in both directions on each mainline track from all passenger stations included in this Contract. These performance level speed limits shall be determined as follows:
   1. The PL1 ("MAXIMUM" PL) speed limit shall allow the train to run at the maximum safe interstation speed (MAS), resulting in the minimum safe interstation run time.
   2. The PL2 ("NORMAL" PL) speed limit shall limit the train speed to approximately 90 percent of the maximum safe interstation speed. (Normal scheduled run times will be based upon this performance level.)
   3. The PL3 ("REDUCED" PL) speed limit shall limit the train speed to approximately 90 percent of the PL2 speed.
   4. The PL4 ("RETARDED" PL) speed limit shall limit the train speed to approximately 80 percent of the PL2 speed.

E. The Train Control stationing for all block boundaries shall be included in the Contractor's block design submittal. (This may or may not coincide with the civil stationing for block boundaries.)

3.03 IMPLEMENTATION

A. Block Boundaries
   1. The Contractor shall install block boundaries of the type specified in the approved block design at the locations specified herein and as indicated on the approved block design drawings. Impedance bonds shall be installed within the specified tolerance distances from all crossbonding and substation return conduits unless otherwise authorized by the Project Manager. The use of terminating receivers or other similar devices (in lieu of impedance bonds) to establish block boundaries will not be permitted except as previously approved by the Project Manager in writing on an individual location basis.

B. Control Codes

1. The Contractor shall install all equipment and software required to provide the control codes specified in the approved block design.

3.04 FIELD TESTING

A. The Contractor shall conduct safe-braking-distance and all applicable headway tests as part of the system testing of all trackage included under this Contract to verify that the braking distances and headways specified can be met under actual operating conditions. See Section 34 42 83, ATC Train Separation Tests (Level B) and Section 34 42 88, ATC - Quality Assurance.

3.05 MEASUREMENT FOR PAYMENT

A. No separate payment will be made for the design, simulation and implementation of the block design. The block design's acceptability will be determined based upon its conformance to the Specifications.

END OF SECTION

SECTION 34 42 18

ATC REQUIREMENTS FOR SPECIFIC LOCATIONS

PART 1 - GENERAL

1. SECTION OVERVIEW

A. This Section identifies ATC-specific equipment, work, and other requirements for design and construction of a new inline rail station with emergency crossover called Potomac Yard Station (Contract FQ16146). These *ATC Requirements for Specific Locations*, in addition to all ATC Section requirements specified elsewhere, apply to all work.

B. The *Potomac Yard Station* will tie in with the existing rail alignment near the project work limits, and will replace all Train Control circuits and equipment currently within the boundaries of intermediate TCR Potomac Yard (C11) located between Ronald Reagan National Airport (C10) and Braddock Road (C12) rail stations. A new Potomac Yard Station TCR will replace the existing Potomac Yard TCR (C11).

C. The new Potomac Yard Station TCR will tie into WMATA's existing ATC system at Ronald Reagan National Airport TCR and Braddock Road TCR via interface racks communicating over fiber optic cable.

D. The Contractor will provide, in the manner specified, the Block Design and the final design, fabrication, delivery, installation, testing, documentation and placing in service of every system, subsystem, circuit and piece of equipment described, required or implied by the Contract Documents to establish a safe, complete, workable, operating Automatic Train Control (ATC) System for the portion of the Metrorail System of the Washington Metropolitan Area Transit Authority included in this Contract.

2. RELATED SECTIONS

A. Related work specified elsewhere shall include, but not be limited to, the following Sections:

1. Section 34 42 01 ATC Definitions and Abbreviations
2. Section 34 42 04 Current Automatic Train Control System
3. Section 01 11 00 Summary of Work
4. Section 34 42 13 ATC Block Design
5. Section 34 42 16 Basic Circuit Requirements
6. Section 34 42 17 Basic Interlocking Requirements
7. Section 34 42 81 ATC Test and Inspection Requirements
8. Section 34 42 88 ATC – Quality Assurance

3. POTOMAC YARD STATION (C11) CONSTRUCTION AND TIE-IN WORK

A. Contractor shall provide all equipment, supporting infrastructure, circuitry and logic, adjacent station interfacing, and perform all work necessary to implement the design, installation, and testing of the new Potomac Yard Station Train Control systems. Unless previously approved in writing by the Project Manager, all work will minimally conform to ATC Specifications, Design Criteria, and ATC Drawings provided.

B. The new station, including modified-alignment roadway and a new emergency crossover, will be constructed east of the existing roadbed, and will remain segregated from passenger operations during the new construction phase.

C. Line circuits and traffic circuits interfacing between the new C11 Station TCR and existing C10 and C12 TCRs shall be accomplished using vital microprocessor systems and optical fiber communication lines. Interface racks and processors, similar to those used at Forest Glen (B09) TCR interfacing with Silver Spring (B08), will be installed in C10 and C12 TCRs. These processors shall be redundant, and shall communicate to adjacent TCRs via redundant optical fiber communications paths.

D. Contractor shall provide accurate and timely preliminary documentation to the Project Manager before fabrication, procurement, and installation work. This shall include complete and detailed cable/conduit/duct bank/manhole/surface trench design documentation for each TCR area of control for review and approval prior to cable installation.

E. Contractor shall provide accurate ongoing and final documentation in a timely fashion, and in the specified medium, content and format (See Section 34 42 91, ATC Drawings).

F. The ATC System and subsystems provided under this Contract shall be as specified in these documents, and shall be compatible in every respect with the existing Automatic Train Control System which is described in Section 34 42 04, Current Automatic Train Control System.

G. The ATC equipment and systems provided under this Contract shall be immune to interference from all transit vehicle electrical subsystems, and to interference from any WMATA VHF hand held radio transmitter or cell phone keyed at a distance of six inches from the equipment or system.

H. The subsystems and equipment included in the ATC System provided under this Contract shall be designed for accessibility and ease of maintenance.

I. Contractor shall work in close cooperation with WMATA Operations and Maintenance to develop and coordinate tie-in plans to facilitate installation, testing, and commissioning of new systems and the interlocking.

4. BLOCK DESIGN

A. A preliminary block layout, wayside equipment locations, cable plans, and control line diagrams are contained in the ATC Drawings; however, Contractor shall prepare a final block design for review and approval by Project Manager that provides equivalent or improved safety and performance. Contractor's block design shall comply with all technical specifications including Section 34 42 13 ATC Block Design.Contractor's block design shall determine the number of blocks required to comply with the technical specifications and at no additional cost to WMATA if additional blocks are required. A reduction in the number of blocks must be specifically approved by the WMATA Project Manager and based on specific justification submitted by the contractor.

B. When possible, maintain the locations of existing impedance bonds outside the control limits of the existing C11 TCR.

5. NEGATIVE RETURN BONDING

A. The Contractor shall work directly with WMATA to design a traction power return system to provide adequate capacity that minimizes traction return imbalance.

B. Contractor shall consult applicable ATC Standard Drawings with regards to negative return bonding.

1. ATC Standard Drawing ST-ATC-GEN-009, Typical High Current Impedance Bond Negative Return Bonding Diagram
2. ATC Standard Drawing ST-ATC-GEN-010, Typical Interlocking Wrap Bonding
3. ATC Standard Drawing ST-ATC-IEQ-002, Typical Interlocking Configuration
4. ATC Standard Drawing ST-ATC-IEQ-011, Typical Mainline Negative Return Bonding (Power Frequency Track Circuits)
5. Section 34 42 65, ATC – Track Bonding Layouts

C. For negative return cross bonding, the following conditions apply:

1. There must be at least two AF track circuits between cross bond locations.
2. For adjacent cross-bonds containing multiple AF Track Circuits, the length of any one of these AF Track Circuits shall not exceed 55% of the distance between cross-bonds.
3. Cross bond locations that do not meet conditions 1 and 2 above must be supported by engineering analysis confirming proper broken rail detection.

D. Negative return bypass cables shall be installed on each track at C11 as shown on standard drawing ST-ATC-IEQ-003.

6. MAJOR SUBSYSTEMS

A. The major wayside subsystems which shall be provided as components of the wayside Automatic Train Control System under this Contract are:

1. Automatic Train Protection (ATP)
2. Automatic Train Operation (ATO)
3. Automatic Train Supervision (ATS)

B. The Automatic Train Protection System shall be provided as specified herein and shall include all wayside subsystems necessary to provide safe operation of trains. This shall include the control of interlockings and the safe operation of train car doors. This system shall be implemented using vital relays and processors as specified in Section 34 42 28, ATC – Vital Functions.

C. The non-vital functions related to train/station operations shall be accomplished by microprocessor-based systems as specified in Section 34 42 24, Microprocessor Systems.

D. The Automatic Train Supervision System shall be provided as specified herein. It shall include all wayside equipment and subsystems necessary to supervise the scheduled performance of trains and to control. The signal system shall transmit and receive, indications and controls, to the Rail Operations Control Center as specified herein and as shown on the Contract Drawings.

7. AUDIO FREQUENCY TRACK CIRCUITS

A. Ansaldo AF-800W track modules and Ansaldo impedance bonds are installed at adjacent locations, Ronald Reagan Washington National Airport (C10) and Braddock Road (C12) rail stations. New equipment ATP Module/Impedance Bonds shall be completely compatible with existing station boundary audio track circuits. Contractor shall conduct a risk assessment and safety analysis to document equipment compatibility if installing a different manufacturer's equipment at no additional cost to WMATA. See Sections 34 42 53 (ATC Track Modules), 34 42 61 (ATC Audio Frequency Track and Single Turn Loop Circuit Layouts), and 34 42 62 (ATC Impedance Bond Layouts).

B. Speed command selection, as appropriate, will be controlled by vital processors. There will be provision to implement normal, medium (F9 only), slow, or stop temporary speed restrictions for each audio track circuit.

8. INTERLOCKING TRACK CIRCUITS

A. Power frequency single rail track circuits shall be installed within interlocking limits for both straight through and cross over tracks (see Standard Drawing ST-ATC-IEQ-003).

B. Single turn long wire loops shall be provided to transmit speed commands.

9. OVERRUN PROTECTION

A. Interlocking overrun protection (i.e., opposing track route cancellation) shall be implemented for conflicting routes only. With switches aligned Normal, a Red signal violation on one track will not cancel a signal cleared for a straight move (Normal) on the another track.

10. VITAL AND NON-VITAL MICROPROCESSOR CONTROLS

A. Redundant (Normal and Standby) Interlocking Vital and Non-Vital Processors (except STAP), with automatic failover similar to that implemented for B08 Silver Spring or N06 Weihle Avenue TCRs shall be provided.

B. The Non-Vital Station Processor (STAP), performing the following functions, will be non-redundant:

1. TWC functionality
2. Door/Dwell control
3. Station stopping
4. Platform edgelight control

11. SWITCH MACHINES

A. Unless approved by Project Manager, all switch machines will be Model M-3, manufactured by Ansaldo STS (See Section 34 42 54, Switch Machine - Mainline).

B. Contractor shall install Snowmelter systems for switch layouts.

12. CABLE AND CABLE ROUTING

A. All cables and installation will conform with Section 34 42 49, ATC Signal Wire and Cable.

B. Whenever possible, all ATC signal cables shall be run in cable trough. Written exemptions will be requested from the Project Manager.

C. Lateral cable runs from the cable trough to equipment locations shall be in conduit.

D. Contractor shall design signal cable trough system to facilitate cable routing and distribution with adequate capacity for future expansion.

13. INTRUSION, DETECTION, WARNING (IDW) SYSTEM

A. A new Intrusion, Detection, Warning (IDW) system will be installed. The IDW protected wayside chain marking limits will be C2-407+00 to C2-419+00 and C2-423+50 to C2-481+00, and divided into zones as follows:

1. IDW C11 TRACK 2 ZONE 1 (C11-TK2-1), C2-407+00 to C2-419+00
2. IDW C11 TRACK 2 ZONE 2 (C11-TK2-2), C2-423+50 to C2-454+36
3. IDW C11 TRACK 2 ZONE 3 (C11-TK2-3), C2-454+36 to C2-481+00

B. System design will conform to Section 34 42 57 including disabling ATP speed command transmission within the limits of a detected IDW fence intrusion.

14. ATC DATA TRANSMISSION SYSTEM

A. A data transmission system will be installed that conforms with Section 34 42 25, ATC Data Transmission System, and that transmits all required data specified in 34 42 96, ATC Technical Appendix, Section R, DTS Functions – Table I – Train Operation Controls to Rail Operations Control Center (ROCC) via Communications Department equipment. Legacy data, as noted in Section R, is excluded.

B. The DTS function shall be implemented on an ATC microprocessor based system.

C. TCR DTS data will be exchanged with ROCC over Metronet per requirements of Section 34 42 25, Section 2.01 – General DTS Requirements.

15. SUPPORT SYSTEMS

A. Provide all systems, equipment and facilities required or necessary to support the major ATC subsystems listed above, and all ancillary support systems and facilities as specified herein.

B. Electrical Systems

1. Provide ATC Power Distribution Systems as in Section 34 42 21.
2. Provide ATC Lightning/Surge Protection and Grounding Systems as specified in Section 34 42 22.

16. HOURS OF WORK

All work shall be done in close cooperation and coordination with WMATA and/or others as designated by the Project Manager.

17. QUALITY ASSURANCE

A. As each new construction track is “tied in” with existing roadway, the Contractor shall perform all tests required to ensure that new or modified circuits are safe and compatible with the existing ATC system and that the complete system operates as described and required by appropriate Specifications.

B. The Contractor shall review and submit to the Project Manager a list of all the tests necessary to verify the safe and proper operation of all affected equipment. This

list shall include, but not be limited to, all tests included in Sections 34 42 81 through 34 42 87 which pertain to new equipment and circuitry installed, existing equipment and circuitry reworked.

C. The Contractor shall perform in the field all static and dynamic tests and retesting necessary due to wiring/software changes and track changes involved in the conversion of the area to its final configuration.

D. Testing by the Contractor shall be in close cooperation and coordination with the Authority's ATC operation and maintenance personnel.

E. All testing at the tie-in locations shall be performed in accordance with procedures and schedules previously approved by the Project Manager and at the appropriate times specified by the Project Manager.

18. SPECIAL SUBMITTALS

A. Unless otherwise specified, the Contractor shall submit drawings of all proposed new circuits and revisions to existing circuits, and descriptions and equivalent circuits for all proposed microprocessor logic elements at least 120 calendar days prior to planned start of installation of such circuits or revisions.

B. The Contractor shall submit plans and schedules for conducting the revisions and tie-in work at Potomac Yard Station. These plans and schedules shall be submitted to the Project Manager at least 120 calendar days before the planned commencement of such work. The Contractor's method of placing the new or revised circuitry, programming, and/or equipment in service, and the method of disconnecting, revising and/or removing existing circuitry and/or equipment, shall cause minimum effect on existing passenger service and shall be described in a written proposal/procedure.

C. At least 120 calendar days prior to commencing testing at Potomac Yard Station, the Contractor shall submit to the Project Manager for approval a written description of the scope of testing required for that location. Copies of detailed test procedures and data sheets for these tests shall be included with this submittal. The submittal shall describe in detail all necessary tests and partial tests, identifying those tests which require complete retesting and those for which partial testing is sufficient. Any partial testing shall be properly identified and all items to be tested shall be documented in the submittal. No testing will be permitted until the Contractor has received approval of the test plan and schedule for the location involved.

PART 2 - PRODUCTS

A. The products and materials required by this section shall be as described elsewhere in these and other specifications.

PART 3 - EXECUTION

1. POTOMAC (C11)

A. Contractor shall develop and furnish to the Authority a complete block design for the route segment included in this Contract within 120 days of receipt by the Contractor of NTP. This shall include coordination with, and any necessary

modifications to the block design of the tie-in location(s) already in service. This block design shall be based upon the contractor's final track design and worst-case-composite WMATA transit vehicles, i.e., transit vehicles which incorporate the worst characteristics, from a safety point of view, of each of the types of WMATA METRORAIL passenger transit vehicles currently in Revenue Service (See Section 34 42 13, ATC Block Design and Section 34 42 05, ATC – Transit Vehicle Characteristics).

B. Contractor shall design, furnish and install a new train control system for the new Potomac Yard Station including but not limited to all TCR equipment, wayside equipment, cabling, trough, conduit, communications equipment, etc with proper interfaces to adjacent train control territories, ROCC and other subsystems including but not limited to traction power and communications required to provide a complete operational train control network.

C. Contractor shall design furnish and install all changes to the train control system at C12 Braddock Road and at C10 National Airport Station including the addition of interface racks, control line changes, relocation of impedance bonds if necessary, and any other additions or changes required to provide a completely functional automatic train control system.

D. Contractor shall design, furnish and install an ATC cable distribution system using cable trough (see SECTION 26 05 33.23 CABLE TROUGH) to route ATC cables from the TCR to equipment locations along the wayside. Short lateral cable runs in conduit from the trough to equipment locations shall be permitted. Each installed section of trough shall have 50% of its cross sectional area unused (spare capacity). Contractor shall submit cable fill calculations with his design proving that the design meets this 50% cross sectional area unused requirement.

E. Contractor shall design, furnish and install all subsystems, equipment and materials required to provide a complete communications path between C10, C11 and C12 inlcuding fiber optic cable, raceways, ducts, switches, routers, etc. and this requirement shall take precedence over statements limiting the scope of work contained elsewhere within technical specifications.

F. The contractor shall design, furnish and install all concrete encased ductbank and cabling required for the negative return bypass cabling around the interlocking on each track at C11 as shown on Standard Drawing ST-ATC-GEN-010.

G. Design for a clearance envelope four (4) inches larger than the dynamic outline of the transit cars, i.e., ATC equipment shall be so located that all parts of wayside ATC equipment, including open doors or covers of such equipment, are at least four (4) inches from the dynamic outline of the transit cars wherever possible. This shall include allowances for: middle and end overhang of cars at turnouts and crossovers and on non-tangent track.

2. INSTALLATION

A. Install all necessary and/or required Train Control Room ATC equipment in the TCRs constructed by others (or by other disciplines). Suggested layouts for these rooms are included in the Contract Drawings. Where the proposed or completed lighting arrangement by others (or by other disciplines) in a TCR conflicts with the requirements of the ATC portion of this Contract, the Contractor shall modify the lighting system in an acceptable manner, at no additional cost to the Authority.

B. Install all necessary and/or required trackside ATC equipment. The types of construction involved are shown on the Contract Drawings furnished with these Specifications and on other drawings available to the Contractor. Any trackside ATC equipment that is installed in such a manner that it does not meet the clearance or sighting requirements specified herein shall be reinstalled properly by the Contractor at no additional cost to the Authority.

C. All installation work shall be performed in accordance with stamped approved drawings. No installation work shall begin without a copy of the applicable approved drawings on site.

D. Take all reasonable measures and perform all work necessary to protect the installed ATC equipment and circuitry from damage due to dust, moisture, heat, cold and other potentially damaging conditions, at no additional cost to the Authority.

3. FIELD DOCUMENTATION

A. An As-Built copy of the Room Book of Plans and vital/no-vital application software shall be kept in each Train Control Room during all phases of installation and test. These As-Built drawings/software programs shall reflect the current status of room and wayside conditions at all times.

B. Failure to maintain the room As-Built plans will result in suspension of all activities until complete up-dates are made.

4. INSPECTIONS AND TESTING

A. Type Acceptance Testing

1. All ATC equipment proposed for use on the WMATA Metrorail System under this Contract which is not identical to ATC equipment already in regular use on the WMATA Metrorail System shall be subject to Type Acceptance Testing to determine whether it meets the specified requirements in a manner acceptable to the Project Manager. The Contractor shall devise, perform and document such tests, subject to the direction and approval of, and observation by, the Project Manager or delegate, at no additional cost to the Authority. The decision of the Project Manager with regards to the acceptability of proposed new equipment, equipment configuration, methodology, circuitry and/or programming will be final.

B. Factory Inspections and Tests

1. Perform and document factory and procurement inspections and tests on ATC materials, equipment, and systems to be installed under this Contract as specified in the Quality Assurance portions of the various articles specifying the materials, equipment and systems.

C. Field Inspections and Tests

1. Perform and document field inspections and tests on all ATC systems and equipment as specified in Sections 34 42 81 through 34 42 88, and as specified herein and in other individual Sections specifications.

5. TIE-INS AND ACTIVATION

A. Work in close cooperation and coordination with Authority assigned personnel when making the required modifications and additions to existing, operating ATC circuits and equipment in order to place the new ATC systems in operation in a safe and efficient manner without interfering with passenger safety or service or other normal Metrorail operations

B. When the Metrorail extension or expansion project included in this Contract is put into operation:

1. Disconnect all applicable pre-existing ATC TCR equipment no longer required.

2. Remove and deliver to the Authority, in good working condition, all previously installed wayside ATC equipment no longer required except for wall mounted cable and junction boxes. These shall be left in place.

6. SAFETY

A. Conduct an ATC System RAM and Safety Program for all areas of wayside and trackage equipped under this Contract, as specified in Section 34 42 19, to ensure the safety and reliability of ATC equipment, circuits and systems installed, and the safety of all personnel involved in the associated installation and testing activities.

7. ATC EQUIPMENT FAMILIARIZATION

A. Provide, as a minimum, adequate special instruction and training to thoroughly acquaint appropriate Authority operating and maintenance personnel with ATC equipment and circuits furnished under this Contract which are different from those used on previous operating segments of the Metro system. In addition, provide training as specified in Section 34 42 93, ATC Training Courses, and various other Sections of these Specifications, for certain other specific equipment and systems.

8. ATC DOCUMENTATION

A. Provide both on-going and final, "As-Built" documentation of all ATC equipment, systems, programs, tests, inspections, installation methods, procedures, block design and circuits required or necessary under this Contract in the manner specified in Section 34 42 91, ATC Drawings, Section 34 42 81, Basic ATC Test and Inspection Requirements, 34 42 93, ATC Training Courses, and as required by this and other Sections Specifications.

B. Provide "Equivalent Circuit" drawings in discrete-component logic style for every Boolean algebra software logic statement used to document the logic used in the ATC microprocessor units furnished under this Contract. These drawings shall be separate from the TCR Book of Plans. These drawings shall include a complete, alphabetical listing of all terms used in the Boolean logic statements and their definition in clear and concise English.

9. ATC SYSTEM TESTING SUPPORT

A. Assist the Authority in the system testing of all mainline/OCC interface circuits, systems and subsystems at no additional cost to the Authority.

END OF SECTION

SECTION 34 42 21

ATC POWER DISTRIBUTION SYSTEM

PART 1 - GENERAL

1.01 SECTION INCLUDES

A. This Section specifies the furnishing, installation, submittals and testing requirements of a complete Power Distribution System inside each of the Train Control Room included in this Contract. Each of the Power Distribution Systems shall include all power supplies, transformers, transfer and bypass equipment, buses, feeders, and mains required to accept electrical energy from the two 3-phase power sources in the Train Control Room, modify this energy as required, and distribute it at the proper voltages to the various pieces of ATC equipment.

1.02 RELATED SECTIONS

A. Related work specified elsewhere shall include, but not be limited to, the following Sections:

1. Section 34 42 16 Basic Circuit Requirements
2. Section 34 42 17 Basic Interlocking Requirements
3. Section 34 42 18 ATC Requirements for Specific Locations
4. Section 34 42 22 Lightning/Surge Protection and Grounding Systems
5. Section 34 42 25 ATC Data Transmission System
6. Section 34 42 41 Basic ATC Electrical and Electronic Components
7. Section 34 42 46 ATC Transformers
8. Section 34 42 47 ATC Ground Detectors
9. Section 34 42 49 ATC Signal Wire and Cable
10. Section 34 42 51 ATC Transfer and Bypass Equipment
11. Section 34 42 52 ATC DC Power Supplies
12. Section 34 42 71 ATC – Racks and Cable Trays
13. Section 34 42 77 ATC – Tagging and Marking
14. Section 34 42 78 ATC – Miscellaneous Components and Materials
15. Section 34 42 81 ATC Test and Inspection Requirements
16. Section 34 42 88 ATC – Quality Assurance

1.03 INCOMING POWER SOURCE (BY OTHERS)

A. A Normal (Essential) 208Y/120V, 60-Hz, 3-phase, grounded neutral service and a Reserve (Emergency) 208Y/120V, 60-Hz, 3-phase, grounded neutral service, each with its own grounded neutral conductor, will be terminated by others on disconnect switches located in each TCR.

B. The Normal service will be served by the inverter of the Station Uninterruptible Power Supply System. The rating of both the Normal (Essential) and the Reserve services will be 9 KVA. These services are sized with a demand factor of 70 percent.

C. The Contractor is to ensure that the 9KVA supplied feeds are of sufficient size to supply the required ATC loads in the manner specified herein. If during construction, any of the AC source equipment furnished on site is insufficient to handle the required loads in the manner specified, notification shall be provided by the Contractor in writing to the Project Manager.

1.04 TCR POWER DISTRIBUTION REQUIREMENTS

A. The Contractor shall design each power distribution system to achieve the best load balance practicable.

B. The Contractor shall include the following for each power distribution system:
   1. Power failure and overcurrent alarm system,
   2. Monitoring, isolation, and protection devices shall also be included, as specified herein and as per the AREMA Communication and Signals Manual.

C. The Power Distribution System for each TCR which does not service one or more interlockings shall be equipped with the following:
   1. A Normal 208Y/120V, 60-Hz, 3-phase, 4-wire, grounded neutral bus supplied by the incoming Normal service
   2. A Reserve 208Y/120V, 60-Hz, 3-phase, 4-wire, grounded neutral bus supplied by the incoming Reserve service
   3. An uninterruptible 120V, 60-Hz, single-phase bus energized through an automatic transfer switch by the third phases of the Normal or Reserve 208Y/120V, 60-Hz, 3-phase buses, but isolated from the transfer switch by an isolation transformer and monitored by an AC ground detector. A bypass-isolation switch shall be provided in combination with the automatic transfer switch.
      a. This bus (UBX120-UCX120) shall supply all ATC loads requiring uninterruptible 60-Hz energy. These loads include power frequency track circuits, signal lighting circuits and power supplies for traffic circuits and for miscellaneous loads such as station dwell timers.
   4. Voltage and current meters shall be provided such that the voltage and current between each phase of the incoming AC power may be measured.
   5. An ungrounded 28V DC local energy bus (B28-N28) or grounded 28V DC local energy bus (B28G-N28G) shall be used to supply all vital and non-vital ATC equipment, vital DC circuits which are totally confined to that TCR, and all non-vital 28V DC circuits.
      a. The ends of this bus shall be energized by two identical regulated power supplies. One power supply shall be fed from the Normal 208Y/120V, 60-Hz bus, and the other shall be fed from the Reserve 208Y/120V, 60-Hz bus. There shall be an even number of individual power supplies which are divided equally between two of the three phases of each 3-phase power bus. Each power supply set shall be capable of continuously providing 100 percent of the normal MAXIMUM load for the B28-N28 or B28G-N28G bus.
      b. As an option, the Contractor may furnish and install two identical 3-phase-input regulated power supplies to feed the B28 or B28G bus. Each of these power supply sets, one fed from the Normal 208Y/120V AC, 3-phase bus and the other fed from the Reserve 208Y/120V AC, 3-phase bus, shall be capable of continuously providing at least 100 percent of the normal MAXIMUM load for the B28-N28 or B28G-N28G bus.
      c. The B28-N28 or B28G-N28G bus shall be monitored by a DC ground detector.
   6. An ungrounded 28V DC line energy bus (LB-LC) used to supply all vital 28V DC circuits that extend outside of the TCR. The ends of this bus shall be energized by two identical regulated 28V DC power supplies. Each of these power supplies shall have a continuous output current rating of at least 100 percent of the normal maximum load for the LB-LC bus. One of these power supplies shall be fed from the third phase of the Normal 208Y/120V, 60-Hz bus, and the other shall be fed

from the third phase of the Reserve 208Y/120V, 60-Hz bus. The LB-LC bus shall be monitored by a DC ground detector.

7. While these Specifications call for a DC system potential of 28 volts, nominal, the Contractor may request the Project Manager to consider, and if approved, supply equipment utilizing a different nominal voltage, provided that the equipment supplied is adequately engineered for safety, reliability and efficiency and provided that the equipment complies with the following conditions:
   a. The nominal system potential utilized shall not be greater than 28 volts DC.
   b. Voltage tolerances stated in these Specifications shall, when converted to a percentage basis, apply to the alternate system potential.
   c. The separation and differentiation between grounded and ungrounded DC power buses shall be retained.
   d. All equipment supplied to operate on the alternate supply potential shall be properly designed to operate at that potential.
   e. Contact ratings and wire, conduit, terminal, and junction box sizes stated in these Specifications shall be increased where necessary to accommodate the increased current necessitated by a lower system potential, and as required to hold voltage losses to the levels specified elsewhere in this Section.
   f. Equipment supplied at locations equipped, or partially equipped, on a previous contract for purposes of tie-in, or revision of configuration, shall interface seamlessly with equipment already installed.
   g. Separate power supplies shall be used for track circuit transmitters and track circuit receivers.

1.05 POWER DISTRIBUTION FOR TCRS SERVICING INTERLOCKINGS

A. For Power Distribution Systems in TCRs servicing one or more interlockings, the Contractor shall provide all of the basic power distribution equipment and buses specified for non-interlocking TCRs, plus the following:
   1. An ungrounded WHB DC bus to supply switch-and-lock movement loads and, where applicable, snowmelter control circuit loads.
      a. This bus shall be fed by two identical 3-phase-input regulated power supplies. One power supply shall be fed by the 208Y/120V, 60 Hz, 3-phase Normal bus, and the other shall be fed by the 208Y/120V, 60 Hz, 3-phase Reserve bus. Each WHB-WHC bus may be fed by two identical single-phase-input regulated power supplies, one fed from the three phases of the 208Y/120V, 60 Hz, Normal bus, and the other fed from the three phases of the 208Y/120V, 60 Hz, Reserve bus.
      b. Power supplies shall be capable of supplying enough current to operate five switch-and-lock movements simultaneously, and shall be able to maintain the required operating voltage during such multiple load operation.
   2. Two 120V, 60 Hz buses for signal lighting, each fed from the uninterruptible 120V bus through separate overcurrent protection devices.
   3. A single 120V, 60-Hz "flashing" energy circuit for signal lighting. This energy bus shall be provided by breaking energy from a signal lighting bus over contacts of a vital flasher relay having a "flashing" rate of 56 to 64 flashes per minute.
   4. As many separately protected track transformers and local track relay coil taps as are required to supply the 60-Hz, AC track circuits used in the interlockings.

1.06 QUALITY ASSURANCE

A. The Contractor shall perform an inspection of the system for each power distribution system installed.

B. Test each new Power Distribution System and promptly correct any deficiencies noted. The testing shall be conducted in accordance with the requirements of the approved test procedure for power distribution systems.

C. The Contractor shall comply with the quality requirements described in Section 34 42 88 – Quality Assurance.

1.07 SUBMITTALS

A. The Contractor shall submit the following for approval in accordance with the Contract Documents:

1. Power Computations
   a. Power requirements for each bus and each type of train control load for the Power Distribution System. These computations shall include provisions for adequate wire sizing, taking into account the specifications concerning the requirements for the various overload capacities, the maximum and minimum applied voltage, and the maximum voltage loss.
      1) When computing power requirements for a TCR and determining the proposed arrangement and capacity of its Power Distribution System, include the capacity for all ATC circuits and equipment which would energized from that room.
      2) Based upon these computations, the extra capacity and maximum voltage loss requirements of these Specifications and the requirements all applicable codes and standards, determine and list the sizes and ratings of all buses and other power distribution equipment which is proposed for use in each Power Distribution System.
   b. Complete computations for internal TCR power circuits which show the maximum voltage drop from room power source to each piece of equipment, including the minimum working voltage..
   c. Complete computations for all TC power circuits which leave the TCRs which show the maximum line voltage drop from the TCR to the apparatus or remote field location, and which show the line wire size(s) necessary to provide acceptable minimum working voltage and current at the remote device or location.
   d. Lists of powered equipment and their associated loads shall be included with the complete power computations.
2. Technical Data
   a. Ratings, performance data, and mechanical and electrical drawings for the items of equipment which are proposed to be used as part of the Power Distribution Systems under this Contract. Equipment which does not conform with these Specifications shall not be used as part of any Power Distribution System or addition unless specifically approved by the Project Manager.

3. A complete power distribution layout for each TCR. Each of these layouts shall include the number, physical size, and electrical rating for all buses and other

electrical apparatus and drawings showing the physical location of the various Power Distribution System components in the TCR and showing complete circuits and details of the manner in which the various components are to be interconnected electrically. Each layout shall include provisions for power failure and overcurrent alarms, monitoring equipment, equipment grounding, and ground detection where required.

4. A complete Field Test Procedure for the Power Distribution Systems which shall be in accordance with the requirements specified for field test procedures in Section 34 42 81.

B. For each TCR Power Distribution System installed, the Contractor shall submit a complete field test report..

PART 2 - PRODUCTS

2.01 FEEDERS AND MAINS

A. Feeders and mains shall be of sufficient size to carry the rated load, with voltage variation of not more than plus-or-minus 5 percent of the rated voltage of the appliance, measured at the appliance under full load and no load conditions. The continuous load rating for ATC feeders and mains shall be at least 125 percent of the total load that could reasonably be imposed by the part of the ATC system fed therefrom.

2.02 PROTECTIVE DEVICES

A. Circuit breakers and fuses shall be as specified in Section 32 42 41, Basic Electrical and Electronic Components, and shall be of appropriate continuous current ratings for the loads to be supplied. The protective devices of the ATC Power Distribution System shall be properly coordinated with support from a Protection Coordination Study to provide tripping protection of the system against overloads and short circuits with a minimum of disruption to the functioning of the ATC system.

B. All distribution panels shall be equipped with resettable circuit breakers.

2.03 MISCELLANEOUS POWER DISTRIBUTION EQUIPMENT

A. Furnish and install all mounting and fastening hardware, insulating nuts or covers, cable lugs, conduit, and other miscellaneous components required to provide complete Power Distribution Systems or additions.

PART 3 - EXECUTION

3.01 INSTALLATION

A. All TCR power distribution systems shall be installed as indicated on the approved power distribution layouts and in accordance with the Contract Documents. These systems shall be in compliance with the requirements of all applicable local electrical codes, standards, these Specifications, and the Contract Drawings. The installation of any TCR Power Distribution System shall not commence until written approval for the proposed layout of that ATC power distribution system and all components thereof has been obtained from the Project Manager.

B. The Contractor shall arrange grounded or ungrounded power buses so that ground loops do not exist in the bus or its connecting wiring.

C. The Contractor shall make the connections between the power buses on the power racks and the point of application with wires of the appropriate wire gauge. No parallel path shall exist between the source and the point of application. The current flow in both conductors of the twisted pair connections shall be, at all locations, equal in magnitude and opposite in direction.

D. One twisted-pair may supply more than one appliance only if the conditions in B and C above are met and if irregularities of current draw of any one appliance will not affect the operation of any other appliances obtaining power from the same pair.

3.02 IDENTIFICATION

A. Tag and label the equipment, cables, and buses comprising each ATC Power Distribution System as specified in Section 34 42 77, ATC - Tagging and Marking, and as shown on the Contract Drawings.

3.03 POWER TRANSFER SENSIVITY

A. The ATC Power Distribution System shall be so configured that normal inrush current during a power transfer by the Automatic Transfer Switch shall not trip any input or output fuses or breakers.

3.04 MEASUREMENT FOR PARTIAL PAYMENTS

A. For measurement purposes, ATC Power Distribution Systems shall consist of:
1. Buses, feeders and mains used for power distribution
2. Disconnect and overcurrent protection devices
3. Isolation transformers
4. Power failure and overcurrent alarm system
5. Transfer and bypass equipment
6. DC power supplies
7. Ground detectors
8. TCR equipment for power frequency track circuits (as applicable)
9. All associated mounting and identifying hardware
10. All associated wiring and terminations

B. Power Distribution Systems will be measured for payment based upon:
1. Approval of all the preliminary submittals required.
2. Installation of the system by the Contractor and approval of the installation by the Project Manager.

END OF SECTION

SECTION 34 42 23

SPEED COMMAND FUNCTION

PART 1 - GENERAL

1.01 SECTION INCLUDES

A. This Section specifies the furnishing and installation of a system with the capability of performing vital functions associated with the implementation of logic to perform the selection of speed commands, herein referred to as the speed command function. The reference to speed command function shall include the speed command and door command selection function.

1.02 RELATED SECTIONS

A. Related work specified elsewhere shall include, but not be limited to, the following Sections:

1.	Section 34 42 15	Basic ATC Equipment Requirements
2.	Section 34 42 16	Basic Circuit Requirements
3.	Section 34 42 17	Basic Interlocking Requirements
4.	Section 34 42 19	ATC System Safety Program
5.	Section 34 42 24	ATC – Microprocessor Systems
6.	Section 34 42 28	ATC – Vital Functions
7.	Section 34 42 41	Basic ATC Electrical and Electronic Component Requirements
8.	Section 34 42 53	ATC – Track Modules
9.	Section 34 42 81	Basic ATC Test and Inspection Requirements
10.	Section 34 42 88	ATC – Quality Assurance
11.	Section 34 42 91	ATC – Drawings
12.	Section 34 42 93	ATC – Training Courses

1.03 QUALITY ASSURANCE

A. The Contractor shall comply with the quality requirements described in Section 34 42 88 – Quality Assurance.

B. The Speed command function shall be factory tested in accordance with a Factory Acceptance Test (FAT) procedure which has been furnished and approved. This procedure shall be generated in accordance with the guidelines set forth in Part 3 of this section. Factory Acceptance testing shall not commence until this FAT procedure has been approved.

C. The results of these tests shall be recorded on the approved factory acceptance test procedure forms.

D. The Speed command function shall be field tested in accordance with a field test procedure once the system has been installed. This procedure shall be generated in accordance with the guidelines set forth in Part 3 of this section. Field testing shall not commence until the field test procedures have been approved.

E. The Speed command function shall be tested on the Microprocessor system (as

identified in Section 34 42 24) that has successfully passed Type Acceptance Testing to ensure that the speed command function operates as desired. For the Speed command function testing, the Contractor shall include all TCR equipment required to simulate train movement routes as agreed upon with the Project Manager.

1.04 SUBMITTALS

A. For the speed command function, the following explanatory items shall be submitted. These explanations shall be fully detailed and in plain English. Simple diagrams may be used for clarity. All such diagrams shall be fully explained. A glossary of definitions shall be included to thoroughly define any absolutely necessary technical or unusual words; otherwise, such words shall not be used. Buzzwords, slang, computer jargon and telegraphic writing style shall not be used. The explanatory items are:

1. Explain the method by which the speed command function is implemented, and how the vitality and system safety is ensured.
2. Present a detailed explanation of the method by which the Contractor intends to implement measures to identify failures of the speed command function, especially if these are not self-revealing failures. This explanation shall describe the techniques or schemes to be utilized to verify the correct operation of the speed command function.
3. Identify and present a general explanation of any maintenance requirements that may be necessary to be implemented to maintain the vitality and safety of the system.

B. The Contractor shall submit for review all the information necessary to enable the Project Manager to review that the speed command function operation is as desired and the required measures are in place to diagnose any and all failures affecting the safe operation of the system. This information shall include, but not be limited to:

1. Context Drawings or function flow block diagrams of the proposed speed command function modules including schematic diagrams, internal and external wiring circuits and details, and mechanical and electrical component descriptions down to the component level required to implement the function.
2. List of all the inputs and outputs of the speed command function (interfaces with other functions or equipment), sequence diagrams and state machine diagrams, as applicable.
3. Relevant safety documentation as outlined in Section 34 42 19
4. The complete factory test procedures and simulation test reports

The results of the Project Manager’s evaluation will be used as part of the functional design review. The outcome of this review shall be in no way construed as lessening the successful bidder's responsibility to provide a safe system.

C. Drawings for all internal equivalent circuits and circuits external to the speed command function necessary to accomplish the speed command function described by the Contract Drawings. These revised circuits shall be submitted as part of the Design Review. These circuits shall be complete and continuous from the point of origin to the point of destination. They shall show all interface terminal connections between the portions at various locations and between the various pieces of equipment. The Contractor shall update the Contract Drawings accordingly to support the implementation and operation of the speed command function only when the proposed drawings and design are reviewed and approved to proceed by the Project Manager.

PART 2 - PRODUCTS

2.01 GENERAL REQUIREMENTS

A. The Speed command determination and selection functions shall be implemented on a microprocessor system and fulfil the requirements of Section 34 42 24 – ATC Microprocessor Systems.

B. The selection of the appropriate speed commands shall be based upon several factors including but not limited to the following:
   1. Civil speed limits;
   2. Safety speed limits;
   3. Transit vehicle characteristics;
   4. Traffic locking conditions;
   5. Route status;
   6. TSR selected by the maintainer;
   7. Track occupancy conditions (all as reflected in the approved block design).

C. "Traffic direction cleared" shall be determined either by external vital traffic logic or by vital logic included in the processor modules implementing the speed command speed command function. Where applicable, speed commands shall also be affected by wayside intrusion detection warning systems. Refer to Section 34 42 57 – Intrusion Detection Warning System for specific requirements relating to this function.

D. The selected speed commands shall be for all mainline tracks controlled from the applicable train control room (TCR).

E. The area of track subject to Speed Command selection shall be limited to the area of trackage controlled by each train control room.

F. The speed command selection function shall prevent selection of speed command within interlocking limits until a properly aligned route is available and electrically locked.

G. The speed command selection function shall prevent selection of speed commands for the track circuit upstream of an interlocking home signal until that signal has cleared.

H. The speed command selection function shall prevent selection of speed commands, inhibiting transmission of any speed commands to all trains within the interlocking when a train passes the wayside RED signal with a crossover move aligned.

I. The processing of the speed commands within a TCR area shall interface with the speed commands processed by the adjacent TCR in each direction by means of vital wayside traffic and track repeater circuits or logic.

J. The speed command selection function shall interface with the appropriate external vital traffic logic or internal vital traffic logic and non-vital traffic selection logic for the applicable track(s),

K. The speed command selection function shall interface with the appropriate vital track repeater logic / logic variables to determine track circuit occupancy conditions.

L. This speed command selection function shall also interface with applicable AF track circuit "modules" (ATP modules), responsible for door command and speed command

generation and transmission. Refer to Section 34 42 53 – ATC Track Modules for applicable requirements.

M. The speed command selection function shall issue the appropriate more restrictive command to the correct track module within 0.5 second after receiving a more restrictive change input.

N. The speed commands determined and selected by the processor systems shall be of the same frequencies and code rates as those currently generated by the wayside ATP track modules, and as described in Section 34 42 04.

O. The speed command selection function shall determine on which side the doors are to open.

P. The speed command selection function shall also interface with the vital interlocking function to ensure that vital speed commands are delivered to the train as it approaches, traverses and exits the interlocking(s). This is paramount where a crossover or diverging route is established.

Q. If the speed command function requires a relay based implementation, the implementation shall comply with the requirements of these Specifications.

R. In the design of the logic for the speed selection function, the Contractor shall comply with the logic design inherent in the relay-type Circuit Drawings included in these Specifications. In the design and fabrication of the Systems, the Contractor shall comply with the requirements of all applicable Sections included in these Specifications except as necessary in a manner approved by the Project Manager.

S. All ATC circuitry shall be as specified in Section 34 42 16, Basic ATC Circuit Requirements, and as shown on the Contract Drawings.

T. The Contractor shall provide separate vital I/Os for the redundant vital, fail-safe processor units comprising each Interlocking Vital Processor System for all of the applicable circuits classified as "Vital" in Section 34 42 16, Basic Circuit Requirements. Non-Vital processing, and non-vital inputs and outputs may be utilized for those circuits classified as "Non-Vital" in Section 34 42 16. Requirements for Vital and Non-Vital I/O are contained within 34 42 24, ATC – Microprocessor systems.

U. The Contractor shall implement the circuits which are listed in Section 34 42 16 as being composed of both "Vital" and "Non-Vital" circuit components in a manner approved by the designated Program Manager.

V. Any system provided to perform the speed command function shall be completely compatible with the existing WMATA ATC System in every respect, and shall not interfere with the operation of the data transmission system (DTS), the train-to-wayside communications (TWC) system, or any other system or device currently in use on the ATC System. The speed commands determined and selected by the speed command function shall be of the same frequencies and code rates as those currently generated by the wayside ATP track modules.

W. Proper interfacing between the system performing the speed command function and the following shall be provided:

1. Data Transmission System (DTS)
2. The maintenance and diagnostic system
3. The applicable ATP track modules and track logic
4. Maintenance and Diagnostic System
5. The local track and alarm indication display
6. The applicable speed command functioning system(s) of the adjacent TCR(s)
7. The applicable traffic logic
8. Where applicable, non-vital functions (see Section 34 42 26) including door control and dwell timer functions, and associated vital logic. This shall include, but not be limited to, the following vital logic:
    a. ZSPR (Zero Speed Repeater)
    b. ODR (Open Door)
    c. ODYR (Open Door Combination)

2.02 DOOR COMMAND FUNCTION

A. The door command function shall apply the appropriate OPEN DOOR command to both platform impedance bonds via the interface with the track modules, in such a manner that all doors of the train must be within the platform limits in order for the train to be able to process the command.

B. The door command function, when performed electronically and vitally by the processor systems, shall be implemented as per the requirements outlined within Section 34 42 24 – ATC Microprocessor Systems.

2.03 PROCESSOR BASED EQUIPMENT REQUIREMENTS

A. The System equipment shall meet all of the basic, special and environmental requirements listed in these Specifications.

B. All application software programs shall be the equivalent of the existing WMATA relay logic.

C. All application software source code shall be delineated in Boolean expressions and described in plain English.

D. Each Speed Command microprocessor-based system shall be a high availability system and redundantly configured in a hot-standby configuration so as to provide maximum availability in accordance with the RAMS requirements contained in 34 42 19.

E. Each unit provided to fulfil the redundancy requirements above shall be standalone and independently fulfill the requirements of these specifications.

F. When the "on-line" unit of the Speed Command microprocessor-based system recognizes a problem, a failure, the System shall immediately (if possible) transfer control to the other (hot-standby) unit and remove the "problem" unit from on-line status in such a manner that no problem is caused for the new on-line unit or for the ATP System

G. The Speed Command microprocessor-based system shall provide an indication to Central and to the Maintenance and Diagnostic System and the Local Track and Alarm Display indicating which unit is online.

H. If the "standby" unit is also in a failure mode, or has been removed from service when the operating unit experiences an internal failure, the Speed Command microprocessor-based system shall immediately cancel all cleared routes and signals through its applicable interlocking.

I. Each independent unit in the System shall be capable of being isolated and physically removed from its normal mounting in the TCR (for troubleshooting and maintenance purposes), without disturbing the continued normal operation of the other unit, the on-line processor. When both units are in place and operating properly, it shall be possible to manually cause the System to switch from one "on-line" unit to the other.

J. All internally generated vital variables developed by the vital application logic shall be made available as output bits for future troubleshooting aids. Their status and identity shall be made distinguishable by specially identified LED indicators mounted on the applicable VP logic modules.

K. The Contractor shall provide a means of programming the processor system, initially and as any subsequent changes, improvements, and replacements may require in accordance with the requirements in 34 42 24, Microprocessor Systems.

PART 3 - EXECUTION

3.01 INSTALLATION

A. The various electrical and mechanical devices composing each interlocking control system shall be installed as specified in the Sections describing those devices and as shown on the Contract Drawings and in accordance with all applicable manufacturer's recommendations.

B. A Speed Command microprocessor-based system shall be installed in each TCR newly equipped, and, if so specified in Section 34 42 18, in the existing Tie-In location TCR(s). The equipment shall be installed in equipment cabinets as required in these Contract Specifications and as shown on the Contract Drawings prepared by and approved.

C. The Speed Command microprocessor-based system -I/O modules shall be installed, complete with their programs and all appliances necessary to provide complete SCP Systems which operate as required by these Contract Specifications and are readily maintained.

D. The Speed Command microprocessor-based system shall be interconnected and tested with their interface equipment as required elsewhere in these Contract Specifications.

3.02 OPERATION

A. The final operation of the system performing the speed selection function furnished and installed or modified under this Contract shall conform to the operation of similar types of interlockings described in Section 34 42 04, Current Automatic Train Control System, unless otherwise specified.

3.03 TESTING

A. All speed command functions shall be tested as specified in Sections 34 42 81 through 34 42 87.

B. The speed command function shall include the following test stages to ensure robustness - unit testing and integration testing with other vital and non-vital functions within the ATC system.

C. All installed components shall also be tested as per any recommended tests specified by the Manufacturer.

3.04 MEASUREMENT FOR PAYMENT

A. The Contractor will be reimbursed for the various components and systems comprising an interlocking on the basis of measurement specifications for the components of the interlockings and for the acceptance testing of those components and systems.

END OF SECTION

SECTION 34 42 26

ATC - NON-VITAL FUNCTIONS

PART 1 - GENERAL

1.01 SECTION INCLUDES

A. This Section specifies the non-vital functional capabilities of the ATC system and monitoring of the non-vital functions of the ATC system. The requirements of this Section shall supersede those shown on the Contract Drawings or given in other Sections of these Specifications where the non-vital functions are shown or described as being performed by "discrete component" and relay-type equipment.

B. For purposes of these Specifications, a “non-vital function” shall be defined as any function, implemented through software or hardware, that does not affect the safety of train operation.

C. The non-vital functions of the ATC system can be characterized into the following, but are not limited to:

1. Non-Vital Interlocking function
2. Route Initiation function
3. Station Stopping function
4. Train-to-Wayside Communication (TWC) Function
5. Train door open/close enabling and Dwell time control
6. Train approach warning light control
7. Platform “Next Train Sign” function
8. Event Logging
9. Data Transmission System (DTS)

D. This specification section outlines the functional requirements for all of the ATC Non-Vital functions listed above.

1.02 RELATED SECTIONS

A. Related work specified elsewhere shall include, but not be limited to, the following Sections:

1. Section 34 42 15 Basic ATC Equipment Requirements
2. Section 34 42 16 Basic Circuit Requirements
3. Section 34 42 17 Basic Interlocking Requirements
4. Section 34 42 24 ATC – Microprocessor Systems
5. Section 34 42 25 ATC – Data Transmission System
6. Section 34 42 28 ATC –Vital Functions
7. Section 34 42 29 ATC – Network Requirements
8. Section 34 42 41 Basic ATC Electrical and Electronic Component Requirements
9. Section 34 42 53 ATC – Track Modules
10. Section 34 42 67 ATC Marker Coil Layouts
11. Section 34 42 81 Basic ATC Tests and Inspection Requirements
12. Section 34 42 88 ATC – Quality Assurance
13. Section 34 42 91 ATC – Drawings

1.03 QUALITY ASSURANCE

A. The Contractor shall comply with the quality requirements described in Section 34 42 88 – Quality Assurance.

B. Each non-vital function shall be factory tested individually in accordance with a factory test procedure which has been furnished and approved. This procedure shall be generated in

accordance with the guidelines set forth in another part of this section. Factory testing shall not commence until this procedure has been approved.

C. The results of these tests shall be recorded on the approved factory test procedure forms.

D. All of the non-vital functions shall be field tested in accordance with a field test procedure on the microprocessor system that has successfully passed the Type Acceptance testing according to Section 34 42 24, once the microprocessor system has been installed. This procedure shall be generated in accordance with the guidelines set forth in another part of this section. Field testing shall not commence until this procedure has been approved.

1.04 SUBMITTALS

A. For each non-vital function, the following explanatory items shall be submitted, if not previously submitted and accepted by the Project Manager. These explanations shall be fully detailed and in plain English. Simple diagrams may be used for clarity. All such diagrams shall be fully explained. A glossary of definitions shall be included to thoroughly define any absolutely necessary technical or unusual words; otherwise, such words shall not be used. Buzzwords, slang, computer jargon and telegraphic writing style shall not be used. The explanatory items are:

1. Explain the method by which the non-vital functions are implemented.
2. Present a detailed explanation of the method by which the Contractor intends to implement the diagnostic measures to identify failures of the non-vital functions.

A general explanation shall be provided of the method by which the maintenance requirements of this Section shall be implemented. This explanation shall describe the features of the proposed maintenance program and the test equipment to be supplied for use with the maintenance procedures.

B. The Contractor shall submit for review all the information necessary to enable the Project Manager to review that the non-vital function operation is as desired and the required measures are in place to detect any failures. The information shall include, but not be limited to:

1. Context Drawings or function flow block diagrams of the proposed non-vital function modules including schematic diagrams, internal and external wiring circuits and details, and mechanical and electrical component descriptions down to the component level required to implement the function.
2. List of all the inputs and outputs of each non-vital function module (interfacing with other vital or non-vital functions or equipment), sequence diagrams and state machine diagrams, as applicable.
3. The complete factory test procedures and simulation test reports

The results of the Project Manager's evaluation will be used as part of the functional design review. The outcome of this review shall be in no way construed as lessening the successful bidder's responsibility to provide a safe system.

C. The Contractor shall propose through a revised version of the circuits of the Contract Drawings as necessary to show the circuitry external to the Contractor's processor system necessary to accomplish the non-vital function implementation described by the Contract Drawings. These revised circuits shall be submitted as part of the Design Review. These circuits shall be complete and continuous from the point of origin to the point of destination. They shall show all interface terminal connections between the portions at various locations and between the various pieces of equipment. The Contractor shall update the Contract Drawings accordingly to support the implementation and operation of the non-vital function only when the proposed drawings and design are reviewed and approved to proceed by the Project Manager.

PART 2 - PRODUCTS

2.01 GENERAL REQUIREMENTS

A. Non-vital functions, when implemented electronically by the processor shall comply with requirements specified in Section 34 42 24 – ATC – Microprocessor Systems for purposes of this Contract.

B. The implementation of non-vital functions shall not impact the safe operation of the ATC system.

2.02 NON-VITAL INTERLOCKING FUNCTION REQUIREMENTS

A. The Non-Vital Interlocking function shall implement the non-vital portion of the interlocking functions and circuits as identified in Section 34 42 16 – ATC Circuit Requirements and 34 42 17 – Interlocking Requirements in a manner approved by the designated Project Manager.

B. The non-vital interlocking function shall ensure that all controls from the central control computer are processed and generate the required indications according to the interface that is required to perform the non-vital interlocking functions.

2.03 ROUTE INITIATION FUNCTION REQUIREMENTS

A. All route initiation functions are considered non-vital.

B. Route initiation is accomplished by identifying the desired route in terms of the entering signal and the exiting signal. Route Initiation can be accomplished from:
   1. Local Control Panel
   2. Central Control Computer
   3. Track Circuit Occupancy
   4. Train Identity
   5. Wayside Pushbutton

C. Route Initiation by Local Control Panel: In this method of initiation, the first signal button actuated on the local Interlocking Control Panel identifies the entering signal and the second signal button actuated on the local panel identifies the exit. Assuming the desired exit is available and no conflicts are detected, the route initiation function shall enable the appropriate logic and indications associated to the selected entry and exit signal.

D. Route Initiation from Central Control: The route initiation function shall process all route requests from the central control computer associated with the entering signal, to the local equipment. The local receipt of the first route request control shall be indicated back to central control. Receipt of the entrance received indication at central control keys the computer to stop sending the route request control associated with the entering signal and to start sending the route request associated with the exiting signal. On receipt of this second route request control, if the desired exit is available and no conflicts are detected, the route initiation function shall enable the appropriate logic and indications associated to the selected entry and exit signal.

E. Route Initiation by Track Circuit Occupancy: In this method of route initiation, the

presence of a train in certain track circuits shall cause the route initiation function to initiate a route which the train will subsequently accept. The route initiation function provides for storage of route requests when a desired route cannot yet be initiated, priority determination, and determination of exiting signal when a choice exists. This method of route initiation is used only at certain locations and can be enabled or inhibited from the local control panel or from central control. While this method of initiation is enabled, all other methods of initiation remain effective. In a variation of this method, the route request may not be initiated until a "TRAIN READY" indication is received from the train occupying the track circuit.

F. Route Initiation by Train Identity: This method of initiation is the same as route initiation by track circuit occupancy, except that the trigger for an initiation request is the receipt of a train destination and the determination of the desired exiting signal is by the destination of the train. When this method is used, the transfer of the detected train destination information to Central must be coordinated with the occupancy of the designated ADVANCE APPROACH area by the train, and with route availability.

G. Route Initiation by Wayside Pushbutton: In this method of route initiation, the desired route is defined by actuation of a pushbutton located at the entering signal. The entering signal is determined by physical location of the pushbutton box and the exiting signal is determined by which button in the box is actuated. The route initiation function shall enable the appropriate logic when the pushbutton associated with the entering signal is pressed and enable the logic associated with the exiting signal. This method of route initiation is used only at certain signals, signals which also have initiation methods as described in Part 2.05E or 2.05F and is active at all times.

H. The route initiation function shall ensure that all route initiation methods shall be coordinated to protect against misrouting and lockups. Considerations for the coordination of route initiation shall include:

1. Local-remote control to prevent both local control and central control from being active simultaneously;
2. Lockout control to prevent any active initiation method from functioning while another method is being use to initiate a route; and;
3. Time-out control to cancel an unidentified entering signal if an exit signal is not identified within a pre-determined time.

I. The route initiation function shall include a search of all possible routes associated with a defined or selected entering signal. The result of this search shall be the enabling of the exit logic associated with all “allowable-exit” signal location. The exit logic associated with a given “allowable-exit” signal location must be enabled before the selected exit signal can be energized to identify it as the exiting signal.

2.04 STATION STOPPING FUNCTION REQUIREMENTS

A. The station stopping function shall be implemented as the wayside portion of a system which shall cause the vehicles to decelerate smoothly to a stop at the desired location along each passenger station platform included under this Contract. This function shall be fully compatible with the carborne program stop equipment currently in use.

B. The station stopping function shall transmit codes from the TCR to appropriate track-mounted marker coils to cause two-car, four-car, six-car and eight-car trains to stop with their front ends aligned with the leaving end of the platform, all as determined by the

presence or absence of special jumpers in the control circuitry. The codes required are specified in Section 34 42 67, Marker Coil Layouts.

C. The station stopping function shall also have the capability of transmitting to the wayside marker layouts the proper code to cause the trains to skip the station stop when so commanded by Central Control via the DTS. The skip stop command received from the central control computer shall remain active until the skip-stop command is transferred to the intended train. In the absence of a skip-stop signal from Central Control, the station stopping function shall send to the appropriate marker coils the three-wire code for the programmed train/platform alignment.

D. The station stopping function shall consist of the following equipment and logic:

1. Equipment and logic located in the TCRs which shall interface properly with the DTS and with the other passenger station subsystems, and which shall translate skip-stop commands and train/platform alignment data into a three-wire, 28 Volt polarity code for transmission to track-mounted marker coils.
2. Track-mounted marker assemblies to house the marker coils, tuning units, and related hardware required to transfer program stop data to the carborne recognition equipment. These marker assemblies shall meet the requirements specified in Section 16967, Marker Coil Layouts.
3. All necessary interconnecting cable and wire for the equipment specified above.

2.05 TRAIN-TO-WAYSIDE COMMUNICATIONS (TWC) FUNCTION REQUIREMENTS

A. The TWC function to be provided shall expand the wayside portion of the current METRORAIL TWC System as described herein. The operation of the TWC function specified herein shall be functionally compatible with the current TWC System installed under previous WMATA contracts or by the Authority. The TWC function shall be interfaced in such a way that any frequency ranges of electrical noise from the surrounding environment shall not interfere with the normal operation of the TWC System. TWC signal input circuits shall be provided with security check circuitry or software which shall not allow electrical noise to be interpreted as a valid message.

B. The current TWC System is the digital communications link between trains and wayside for exchange of data. The following functional data is exchanged between the trains and the wayside equipment.

Train-to-Wayside	Wayside-to-Train
Train Destination	Train Destination
Train Number	Train Number
Manual Pushbutton Right	Platform ID
Manual Pushbutton Left	Passenger Station Check
Doors Closed Right	ATS Acceleration
Doors Closed Left	ATS Speed Limit
PSS Active	
ATP in Effect	
Train in ATO	
Passenger Station Check	
Train Ready	

All Doors Closed	
Train Berthed	
Motion Detection	
Train Length	

C. The TWC System is a continuous-scan, time division multiplex system over which communications are exchanged between trains and wayside on a time-shared basis. It utilizes a 9.8 KHz channel coupled to the running rails by an impedance bond at the leaving end of the station for each direction of travel. TWC signals are received by the train from the rails through the ATP receiver coils. TWC signals are transmitted to the rails from the train by means of a three-foot by four-foot TWC transmit loop mounted under the train.

D. The train transmitter provides the overall control for the TWC System. "Short" messages containing Train Destination are repetitively transmitted from the train with a 100 millisecond time delay between messages. The 100 millisecond interval is provided to allow for the initiation of response messages from wayside.

E. The wayside transmitter does not transmit until a message is received from the train. When a complete "Short" message from the train has been received at wayside, the wayside TWC receiver causes the wayside TWC transmitter to transmit a message to the train.

F. At passenger stations receipt of a message from the wayside TWC transmitter by the train TWC receiver causes the train TWC transmitter to transmit the "Long" message. The train and wayside TWC equipment continue to exchange messages until the train leaves the station.

G. Wayside "Flyby" transmitters and receivers provide digital communications between the train and wayside while the train is moving. Coupling between the train and rails is as described above. Flyby receivers are located at the approaches to certain automatic interlockings to receive destination codes from the trains for route selection purposes. Flyby transmitters are located where it is necessary to modify the ATS speed of trains between passenger stations, as follows: (See Double Line Track Plans)

Type (1)	and/or
Type (2)	in approach to terminal stations in order to enhance the efficiency of terminal operations;
Type (3)	in order to adjust the ATS speed of trains immediately after leaving a terminal station interlocking and;
Type (4)	(for Track 2) or
Type (5)	(for Track 1); in order to reduce the ATS speed of trains on outdoor approaches to passenger stations during inclement weather. (This particular type of Flyby Transmitter shall be operational only when an "ENABLE RETARDED PERFORMANCE LEVEL" command (request) is in effect at the applicable passenger station.

H. The wayside "Flyby" transmitter shall operate as a "short message" transmitter. The

wayside "Flyby" receiver shall operate in the same manner as the station TWC receiver with the exception that all master control timing shall be internally generated.

I. The "Performance Level Translator" logic shall convert the two-bit performance level control received from central control into a four-bit binary code which identifies the ATS speed limit required to achieve the desired performance level (see section 34 42 04). The two bit Performance Level Translator shall be configurable without requiring in-service modifications of Software to change performance levels.

J. Digital Message Formats

1. The digital messages exchanged in the TWC System shall be in the following formats:

a. Train-to-Wayside "Short" Message

Bit	Description
1	Mark
2	Space
3	Mark - Message Start
4-11	Data-Word 1 - Train Destination
12	Parity - (odd)
13	Mark
14	Mark
15	Mark - Message End

b. Train-to-Wayside "Long" Message

Bit	Description
1	Mark
2	Mark
3	Mark - Message Start
4-11	Data - Word 1 - Train Destination
12	Parity (odd)
13-24	Data - Word 2 - Train Number
25	Parity (odd)
26	Data - Word 3 - Manual Pushbutton Right
27	Data - Word 3 - Manual Pushbutton Left
28	Data - Word 3 - Doors Closed Right
29	Data - Word 3 - Doors Closed Left
30	Data - Word 3 - PSS Active
31	Data - Word 3 - ATP in Effect
32	Data - Word 3 - Train in ATO
33	Data - Word 3 - Spare
34	Data - Word 3 - Spare
35	Data - Word 3 - Spare

36	Data - Word 3 - Spare
37	Data - Word 3 - Spare
38	Parity (odd)
39	Data - Word 4 - Passenger Station Check
40	Data - Word 4 - Train Ready
41	Data - Word 4 - All Doors Closed
42	Data - Word 4 - Train Berthed
43	Parity (odd)
44	Data - Word 5 - Motion Detection
45	Data - Word 5 - Train Length 2
46	Data - Word 5 - Train Length 4
47	Data - Word 5 - Train Length 8
48	Parity - (odd)
49	Mark
50	Mark
51	Mark - Message End

c. Wayside-to-Train "Short" Message

Bit	Description
1	Mark
2	Space
3	Mark - Message Start
4-7	Word 1 – ATS Speed Limit
8	Parity - (odd)
9	Mark
10	Mark – Message End
11	Mark - Message End

d. Wayside-to-Train "Long" Message

Bit	Description
1	Mark
2	Mark
3	Mark - Message Start
4-11	Data - Word 1 - Train Destination
12	Parity (odd)
13-24	Data - Word 2 - Train Number
25	Parity (odd)
26-33	Data - Word 3 – Platform ID
34-37	Data - Word 3 - Spares
38	Parity (odd)
39	Data - Word 4 - Passenger Station

	Check
40	Data - Word 4 – ATS Acceleration
41	Data - Word 4 – Door Close Warning
42	Data - Word 4 - Spare
43	Parity (odd)
44-47	Data - Word 5 – ATS Speed Limit
48	Parity - (odd)
49	Mark
50	Mark
51	Mark - Message End

K. The transmit function of the TWC shall be capable of performing the following:

1. Interface and communicate with the following equipment in order to relay information:
   a. DTS;
   b. ATP track modules;
   c. Station platform specific TCR circuitry;
   d. TWC flyby transmitter;
   e. TWC flyby receiver; and
   f. Dispatch receiver.
2. Convert parallel ATS codes received from the OCC to serial binary codes for use by the Carborne TWC System.
3. Generate the required timing pulses;
4. Employ FSK to be capable of generating three output frequencies (center 9800 Hz; mark 9950 Hz; space 9650 Hz) when digitally keyed by the logic circuitry
5. Interface with the oscillator power amplifier which is shared with the ATP System
6. Provide the following LED maintenance indicators, which shall include, but may not be limited to:
   a. For Station TWC Transmitters:
      1. DTS Operational
      2. DTS Strobe Pulse Present
      3. Memory Load Pulse
      4. Receiver Inhibit
      5. Parity Check
      6. Key On Transmitter
   b. For Flyby Transmitters:
   c. DTS Operational
   d. DTS Strobe Pulse Present
   e. Receive Carrier Detected
   f. ATS Speed Bit 1
   g. ATS Speed Bit 2
   h. Key On Transmitter
   i. An externally mounted programmable plug coupler which shall translate ATS speed bits from the received from the OCC into the ATS speed required for each location.
7. LED indicators shall be mounted and identified on the system module such that they will be visible at all times without the need to remove

covers or open the module.

8. Be capable of transmitting signals with the following characteristics:
   a. Frequency: 9800 Hz carrier frequency
   b. Modulation: frequency shift keying (±150 Hz)*
   c. Signal to Noise Ratio: 20 d
   d. Output Impedance: 600 ohms
   e. Bit Rate: 100 bps
   f. Range: 450 feet
   g. Output Power: 20 watts**

*mark 9950 Hz; Space 9650 Hz

** Transmitter output shall be connected to the power amplifier shared with the ATP System. Output of the power amplifier is 60 watts; the TWC output is limited to 20 watts

L. The receive function of the TWC shall be capable of performing the following:
   1. Limit the level of the received signals.
   2. Decode serial data received from the Carborne TWC System for transmission to the OCC as parallel data.
   3. Employ a passive network band pass filter to filter noise and harmonics.
   4. Employ a limiter amplifier
   5. Provide a squelch feature to inhibit the receiver during transmitter operation
   6. Detect the mark and space signals.
   7. Equalize and square signals before transmitting them to the OCC.
   8. Provide the following LED maintenance indicators, which shall include, but may not be limited to:
      a. For Station TWC Receivers:
         1. Receive Carrier Detected
         2. Data Strobe
         3. Word 1
         4. Word 2
         5. Word 4
         6. Word 5
      b. For Flyby TWC Receivers:
         1. Receiver Carrier Detected
         2. Data Strobe
         3. Receive Mark Bit
         4. Word 1 Parity Check
         5. 1.6 K Hz Clock
         6. Shift Register Clock
   9. Capable of receiving signals within the following characteristics:
      a. Receiver Band: Passive network; 9800 Hz
      b. Pass Filter: center frequency; bandwidth ±250 Hz at 3dB down.
      c. Receiver Limiter Amplifier: Full limiting with input signal of .016V rms. Dynamic limiting range of 54 dB minimum.
      d. Carrier Detector Amplifier: Gain 42 dB. Adjustable 0-42 dB.
      e. Squelch: Carrier operated; adjustable threshold.
      f. Receiver Sensitivity: Adjustable without using a train.

   10. The equipment responsible for performing the receiver function shall have the following constraints:

a. Receiver Detector: 2 parallel tuned circuits: f1 is 9650 Hz, f2 is 9950 Hz, each with bandwidth of ±70 Hz.
b. Size: No larger than 15x18x6 inches.
c. Weight: Maximum 15 pounds.

M. The monitoring of the TWC shall be implemented through an external monitor plugged into the processor cabinet or through the Local Control Panel display (Section 34 42 56/34 42 58) or a proposed manner that is approved by the Project Manager. The monitoring function of the TWC shall be capable of performing the following:
1. Support an interface between the processor and the monitor.
2. Provide indications for each of the functions listed in Part 2.05 to the TWC monitor such as train length, train destination and train number
3. Provide seamless operation if an external monitor is plugged in such that the system operation of the processor will not be affected. No movement or replacement of any part of the installed system shall be required.

N. The Contractor shall provide one TWC monitor for each route segment in the Contract, if using an external monitor is the approach adopted for TWC monitoring. The type of TWC monitor acquired for this purpose shall be determined in collaboration with the Authority.

O. The data logging function of the TWC shall be capable of performing the following:
1. Provide an interface between data logging device and the processor
2. Download recorded data from the processor to the Maintainer when required through the data logging device
3. Enable the data logging device to observe real-time operation of the processor on the data logging display screen
4. Provide a seamless operation when the data logging device is plugged in, such that the normal operation of the processor is not affected

P. The Contractor shall provide a notebook-size data logging device for each TWC installation location in the Contract. The type of data logging device acquired for this purpose shall be determined in collaboration with the Authority.

2.06 TRAIN DOOR OPERATION AND DWELL TIME CONTROL FUNCTION REQUIREMENTS

A. The Door and Dwell Control function shall provide independent door and dwell control for each platform.

B. The Door and Dwell Control function shall:
1. Provide the controls necessary to hold a train in the station.
2. Provide automatic door control commands.
3. Control the length of time a train remains at a station platform with its doors either opened or closed.
4. Control the removal and restoration of ATP speed commands for trains at the station platforms.
5. Control the transmission and removal of open door commands to the platform impedance bonds.
6. Provide the interface between the OCC interface to the processors, the dwell timing and the station ATP track modules.

C. The Door and Dwell Control function shall operate as follows:

1. receive the TRAIN BERTHED signal from a train in the station via the TWC function. Upon receiving the TRAIN BERTHED signal, the Door and Dwell Control function shall simultaneously:
   a. Start the operation of the appropriate dwell timer.
   b. Inhibit the transmission of an ATP speed to the platform impedance bond and the next downstream bond.
2. The Door and Dwell Control function shall subsequently replace the ATO speed command with an OPEN DOOR command.
3. Under normal operating conditions, when the dwell timer has timed-out the Door and Dwell Control function shall:
   a. Remove the OPEN DOOR command from the platform impedance bonds.
   b. Allow the restoration of ATP speed commands to the platform impedance bonds and the next downstream impedance bond.
4. The removal of the OPEN DOOR command causes the train to send a TRAIN-NOT-BERTHED signal via the TWC station receiver. Reception of the TRAIN-NOT-BERTHED signal by the Door and Dwell Control function shall simultaneously:
   a. Cause a DWELL COMPLETE signal to be transmitted to the Station Stopping function which shall cancel the train length information stored there.
   b. Cancel the TRAIN BERTHED signal which is stored in the Door and Dwell Control function.
5. The Door and Dwell Control function shall receive and process inputs from the OCC which will permit Central Control to influence dwell times.
   a. These controls are as follows:
      1. HOLD WITH DOORS OPEN
      2. HOLD WITH DOORS CLOSED
      3. TERMINATE DWELL
   b. Receipt of a HOLD WITH DOORS OPEN command from the OCC shall cause the Door and Dwell Control function to maintain an OPEN DOOR command as long as the HOLD WITH DOORS OPEN command is present, even after the dwell timer has timed-out.
   c. Receipt of a HOLD WITH DOORS CLOSED command from the OCC shall cause the Door and Dwell function to:
      1. Remove the OPEN DOOR command
      2. Transmit a zero mph speed command to the train as long as the HOLD WITH DOORS CLOSED command is present, even after the dwell timer has timed out.
   d. Transmission of a TERMINATE DWELL command shall simultaneously:
      1. Cancel the TRAIN BERTHED signal stored in the Door and Dwell Control circuits.
      2. Transmit a DWELL COMPLETE signal to the Station Stopping function.
      3. Remove the OPEN DOOR command from the platform impedance bond.
      4. Allow the restoration of ATP speed commands to the platform impedance bond and the next downstream bond.
6. The Door and Dwell Control function shall be provided with wiring for a

possible future local control switch for the following commands:
a. HOLD WITH DOORS OPEN
b. HOLD WITH DOORS CLOSED

7. The effect of the possible future locally initiated "Hold With Doors ..." commands shall be the same as previously described.

D. The Dwell Control function shall allow for local dwell timers to be accessible through an equipment panel.

E. The Door and Dwell Control function shall interface with the:
1. DTS, ATP track circuit modules, the TWC and Station Stopping functions
2. Dwell timer equipment, or, as an alternative, to generate electronically the adjustable timing intervals necessary for the control of dwell time for each station platform.

2.07 TRAIN APPROACH WARNING LIGHT CONTROL FUNCTION REQUIREMENTS

A. The Train Approach Warning Light Control function refers to the TRAIN ARRIVAL INDICATION LIGHT SYSTEM ("TAILS").

B. The Train Approach Warning Light Control function shall provide the circuitry/logic to initiate a "TRAIN APPROACH WARNING LIGHT" (TAWL) when a train is in approach to, and within approximately 60 seconds of arriving at the station platform.

C. The Train Approach Warning Light Control function shall provide an adjustable timing function output to maintain this "TAWL" indication for a certain period of time after the train first arrives at the station platform track. The "timer" shall initially be set for 120 seconds.

D. The Contractor shall also provide the necessary circuitry to carry this "TAWL" indication to a 28-volt, non-vital relay (provided by others) in the DTS Box (provided by others) in the applicable station AC Service Room, as indicated on the Contract Drawings.

2.08 PLATFORM "NEXT TRAIN SIGN" FUNCTION REQUIREMENTS

A. The Contractor shall provide circuitry for the control of "NEXT TRAIN SIGN" lights furnished by others at terminal locations, as shown on the Contract Drawings. The "automatic" logic for this control circuitry shall be based on "First In/First Out" principles of train entry into station, but provision for manual override control from the Dispatcher's Interlocking Control Panel shall also be included. This logic shall <u>not</u> be included in the processor, but implemented through control circuitry.

2.09 EVENT LOGGING FUNCTION REQUIREMENTS

A. The event logging function shall provide an interface between the event logger and the processor and ensure that the processor provides all operational data to an event logging system, such as an event recorder.

B. The event logging function shall be wide fed from all systems and subsystems that the processor system interfaces with – such as the backbone network, communications room

ancillary devices, etc. This information shall be available for immediate, automated or continuous read only access from the central control computer.

C. The logged information shall include, but is not limited to:
   1. Track circuit status;
   2. Signal status;
   3. Switch status;
   4. Switch lock status;
   5. Approach lock status;
   6. All control requests from the central control computer;
   7. All indications sent to the central control computer;
   8. All alarms;
   9. All operator actions undertaken via Local Control Panel or Dispatcher's Control Panel;

D. All data that is recorded shall be time stamped. Time stamps shall be accurate to 1/10th (0.1) of one second and be derived from the System Clock. The internal clock of the processor shall be synchronized to a system wide clock for use over all communications channels.

2.10 DATA TRANSMISSION SYSTEM (DTS)

A. See 34 42 25 ATC-Data Transmission System

PART 3 - EXECUTION

3.01 TESTING

A. All non-vital functions shall be tested as specified in Sections 34 42 81 through 34 42 87.

B. The non-vital function tests shall include the following test stages to ensure robustness - unit testing and integration testing with other vital and non-vital functions within the ATC system.

END OF SECTION

SECTION 34 42 35

MAINTENANCE AND DIAGNOSTIC SYSTEMS

PART 1 - GENERAL

1.01 SECTION INCLUDES

A. This Section specifies the furnishing, installation, testing and documentation requirements of a local PC-based maintenance and diagnostic system (MDS) in each TCR to provide the capabilities to record system event and alarms and provide diagnostics for all ATC microprocessor systems within the room, to communicate diagnostic information to MDS terminals in other TCRs and to a pre-existing Central Monitoring Location.

1.02 RELATED SECTIONS

A. Related work specified elsewhere shall include, but not be limited to, the following Sections:

1.	Section 01 11 00	Summary of Work
2.	Section 34 42 14	ATC Environmental Requirements
3.	Section 34 42 15	Basic ATC Equipment Requirements
4.	Section 34 42 24	ATC - Microprocessor Systems
5.	Section 34 42 26	ATC - Non-Vital Functions
6.	Section 34 42 28	ATC - Vital Functions
7.	Section 34 42 29	ATC - Network Requirements
8.	Section 34 42 32	Spare ATC Equipment and Selectable Items
9.	Section 34 42 50	ATC - Fiber Optic Cable
10.	Section 34 42 71	ATC - Racks and Cable Trays
11.	Section 34 42 81	Basic ATC Test and Inspection Requirements
12.	Section 34 42 92	ATC - Instruction Manuals
13.	Section 34 42 93	ATC - Training Courses
14.	Division 27	Communication Systems

1.03 QUALITY ASSURANCE

A. The Contractor shall comply with the quality requirements described in Section 34 42 88 - ATC – Quality Assurance.

B. All DTS Interface devices and equipment provided under this Contract shall be factory tested in accordance with a factory test procedure outline in Part 3 of these Specifications, provided by the Contractor and approved by the Project Manager.

C. Each item of equipment shall be inspected by the Contractor immediately prior to installation. Only those items which have suffered no damage during shipment and subsequent handling shall be installed.

D. Following installation, the MDS for each Train Control Room area of control shall be field-tested according to the basic test and inspection requirements specified in Section 34 42 81, Basic ATC Test & Inspection Requirements, and the specific requirements specified in Section 3.0 of this specification.

E. Where applicable, the Contractor shall provide Operation and Maintenance Manuals for

the setup, operation and maintenance of the MDS devices and equipment. These manuals shall be prepared according to guidelines set forth in another part of this Article and in Section 34 42 92, ATC – Instruction Manuals.

1.04 SUBMITTALS

A. The Contractor shall submit the following to the Project Manager for approval:
1. Manufacturer's Product data describing the requirements for preparation and installation as well as Product storage and handling criteria.
2. Product data sheets for the MDS Products with model numbers, dimensions, electrical characteristics, and installation requirements, Mean Time Between Failures (MTBF), Mean Time To Repair (MTTR).
3. Shop and Installation drawings including:
   a. Drawings showing the arrangement of all the required hardware to be installed in each Train Control Room.
   b. Complete drawings for all interfaces of each MDS assembly.
   c. Drawings showing the details for mounting the enclosures in a rack.
   d. Bit mapping details for all interfaces connected to the MDS.
4. System Description Document, including details showing the proposed overview of the MDS screen layouts, all functions to be performed by MDS and the control and indication symbols employed by the MDS workstation.
5. Data collection and transmission strategy, describing the type of information collected and what reports will be generated
6. Alarm/event management strategy describing alarm and event handling.
7. Interface Description document describing interface to local ATC equipment, neighboring MDS, Central Monitoring Location and network. This shall include Block Diagrams showing the Interconnections between the various systems and sub-systems.
8. Output Format for Reports and Databases.
9. Type Acceptance Test Procedures and Test Report
10. Factory Test Procedures and Test Reports
11. Field Test Procedures and Test Reports
12. Operating and Maintenance Manual.
13. Training Courses.

PART 2 - PRODUCTS

2.01 GENERAL

A. The Contractor shall furnish and install a 19" rack mounted Local MDS in each Train Control Room. Each Local MDS shall include: hardware, software, networking and data communications equipment for each MDS to provide real-time data about failures or anomalies for all vital and non-vital microprocessor based ATC systems installed in the TCR and to communicate diagnostic information to MDS terminals in other TCRs and a pre-existing Central Monitoring Location.

B. The Local MDS shall be a networked PC which collects data from the ATC microprocessor based equipment installed in the TCR responsible for performing automatic train control functions including vital and non-vital interlocking, speed command processing and train detection

C. The diagnostic data collected by the Local MDS shall be capable of being accessed from the GUI present on the Local MDS, MDSs located in other TCRs or from the Central

Monitoring Location.

D. The MDS installed in each TCR shall interface with the local MDS in neighboring TCRs and the Central Monitoring Location using the METRONET, WMATA's existing backbone network.

E. The MDS shall employ a direct point-to-point interface with the METRONET port.

F. TCRs required to be equipped with an MDS as part of this Contract will be defined in Section 01 11 00 – Summary of Work and the Contract Drawings.

G. The MDS shall be installed in 19" rack mounted cabinets. Where required, the Contractor shall supply 19" rack mounted cabinets in accordance with Section 34 42 71 – Racks and Cable Trays.

H. The Central Monitoring Workstation currently exists within the WMATA network. The current location is identified in Section 01 11 00 – Summary of Work.

I. The MDS shall include all hardware and software required for a complete operating local maintenance diagnostic system. The system software shall be customized for the application required. All diagnostic software shall be installed on the MDS computers.

J. The remote diagnostics maintenance system furnished under this contract shall be compatible with WMATA's existing MDS furnished under previous contracts.

K. Operation of the ATC equipment shall not be affected by the MDS. The MDS shall employ appropriate security and isolation measures to ensure that that the safe and reliable operation of the ATC system is not compromised by failures or security breaches of the MDS.

2.02 FUNCTIONAL REQUIREMENTS

A. Real time data shall be retained through registering health status, alarms, events and other abnormal occurrences that may take place in any element of the microprocessor based ATC System within the TCR. The MDS shall also generate automatic recommendation of the remedial action by providing the description of Line Replacement Units (LRUs) to remedy the fault.

B. Authorized users shall be able to access and display health status and diagnostic information for the ATC System within the TCR. Authorized users shall be able to access diagnostic data for any TCR from any MDS workstation present on the METRONET.

C. The computer-aided diagnostic function shall manage all available maintenance and diagnostic data to provide authorized users with relevant data for the maintenance activity.

D. The MDS shall provide a means to acknowledge events and alarms and to log the credentials of the user who performed the acknowledgement.

E. The following maintenance data shall be available to authorized users:
   1. Current status of devices (including communication interfaces).
   2. Any alarms/events/abnormal events.
   3. Faulty Lowest Replaceable Unit (LRU) – first level diagnosis.

4. Additional data (second level diagnosis) which could be used for offline system analysis or workshop maintenance purposes.

F. If any faults are detected, the maintenance diagnostic system shall have the capability to activate a resettable alarm on the MDS display and perform further analysis to determine the exact nature of the fault and identify corrective action required to be taken by personnel to eliminate the fault.

G. Analysis and corrective actions shall follow the system design and flow charts for troubleshooting as required in the Operating Manuals section 34 42 92.

H. The system shall identify the lowest level of field replaceable equipment, such as a printed circuit board, module or unit of equipment that fails.

I. The system shall provide automatic detection and identification of faults, correction actions required and the manufacturer's part number and user definable stock number of replacement parts required for corrective action.

J. The system shall have the ability to print a number of reports, including:
1. Recommended remedial action including Line Replacement Units (LRUs) to remedy the fault. Report shall include a description of the LRU and part/revision number.
2. List of Events and Alarms in a configurable report format.

K. The system shall have a maximum boot time of 90 seconds to enter into a usable state.

2.03 GUI REQUIREMENTS

A. The GUI shall be capable of displaying the diagnostic data collected by the Local MDS and diagnostic data from MDS in other TCRs.

B. The system shall use menu driven commands with a windows type interface from the system.

C. The system shall display a "plain English" user friendly description of faults and corrective action, without the use of fault codes.

D. The Graphic User Interface (GUI) shall be a user friendly module, easy to navigate, and shall have all TCR locations connected to the MDS displayed on the welcome screen.

E. The status of connectivity to equipment within each TCR location shall be shown as icons with representative colors. For example, green color when operating normally, orange/yellow to show processor faults and alarms in red.. Any equipment which is connected shall be shown as icons in gray color.

F. The MDS welcome screen shall display main menu items on the top horizontal bar and at start up a log-in pop screen shall appear asking user name and password of the operator.

G. In case of an incoming alarm, that particular equipment icon shall blink in red color at 0.5 sec intervals and an audio beep shall also be generated through internal pc speakers. A dialogue box or notification shall appear requesting the operator to acknowledge the

alarm before continuing. If the operator has not logged in yet, the "Acknowledge" button will appear upon entering the proper credentials. The alarm will persist until acknowledged.

2.04 DATA STORAGE AND RETRIEVAL

A. All incoming alarms and events shall be kept in an archive without the capability of being user deleted or modifiable. In order to maintain the integrity of the database and keep file size in check, the MDS shall feature automatic archiving at regular intervals of 48 hours (2 days). The archive shall be transferred to an external storage device connected to the MDS terminal.

B. The MDS shall support short-term on-line and long-term off-line archive storage.

C. Data for the most recent 48-hour period shall be retained online.

D. Data older than 48 hours shall be able to be transferred on a periodic basis to the off-line archive storage. If archiving is not successful, it shall be re-attempted on a periodic basis. No data shall be overwritten until it has been successfully transferred.

E. On-demand transfer of data newer than 48 hours to the online archive device shall also be provided.

F. All archived data shall be time and data tagged and shall contain sufficient information to access the data. The time and data tagging shall be synchronized with the ATC equipment which is being logged and be time stamped in a manner that files and data are easily retrievable and are saved in a logical order

G. The MDS system shall also provide the ability to export retrieved data into a readable log form (e.g. text file, MS Excel of Word).

2.05 SECURITY

A. The MDS shall have two levels of access security. Access shall be password protected for security.

B. The level of security shall be programed into the system as follows:
   1. Level 1: WMATA Maintenance Personnel – Password protected, read and write only access.
   2. Level 2: WMATA Engineering Personnel – Password protected, read, write and configure systems.

C. The system software shall log the person's ID, password, time, date and locations of the rooms accessed.

D. If the operator makes three failed attempts to provide correct credentials, the system shall proceed with the startup but restrict the user from being able to access to main menu or any right click options on the screen. This is to prevent any unauthorized use of the system at any given time, however allowing the system to continue to operate normally. The failed attempts and the credentials that were failed should be recorded in a log file with date and time registered.

2.06 NETWORK

A. The Contractor shall determine the appropriate interface wiring to be used to interface the Local MDS to the METRONET port as provided by other communications disciplines.

B. Section 01 11 00 – Summary of Work identifies the availability of spare fibers within the communication subsystem.

C. If the Contractor is required to equip the communication network with additional fibers, they shall comply with the applicable Fiber and Networking specifications in Division 27 – Communication Systems.

D. The Contractor shall provide all equipment necessary to interface the MDS to the communication sub-system, including a sufficient number of Ethernet and serial ports in the MDS to service all devices required under this contract plus two spare Ethernet and two spare serial ports.

E. The Contractor shall furnish and install a LAN to interface with all local hardware.

F. Protocol Requirements: The MDS shall transmit information to the other MDS terminals and Central Monitoring Station implementing TCP/IP over Ethernet and using a standard industry networking protocol which is compatible with any existing protocols and equipment currently being used on the WMATA MDS system.

2.07 MDS HARDWARE REQUIREMENTS

A. Special Printed Circuit boards or customized hardware shall not be used or required in Local MDS terminals unless special approval is obtained from WMATA.

B. The Local MDS terminal shall be a rack-mounted industrialized PC, designed to be used in a severe working environment as described in 34 42 14 – ATC Environmental Requirements.

C. The Local MDS terminal and associated equipment shall be state-of-the art equipment reflective of the current technology available in the market.

D. The MDS Terminal shall be fan-less and shall not utilize storage with moving parts.

E. All MDS terminal input devices (e.g. mouse, keyboard) shall be spill-proof and dust resistant.

F. The Local MDS hardware shall have a media reader capable of performing restore/recovery operations with the software master copies, at least 2 USB ports (2.0 or better) and shall be fitted with all necessary hardware required to connect to all other equipment within the TCR.

G. The display monitor shall be a flat screen, a minimum of 15” in size and shall be of latest industry standard.

H. The printer shall be a laser jet printer of the latest industry standard with minimum

600x600 DPI resolution, maximum internal memory, applicable drivers and optional accessories such as software selectable dual paper trays and straight through paper paths with complete mechanism.

2.08 MDS SOFTWARE REQUIREMENTS

A. The application software installed as part of the microprocessor systems required to be monitored as part of this contract shall be compatible with the diagnostic software programs currently in-service. If not, the Contractor shall update all existing software programs for the existing central monitoring location, system wide with new software and if required, upgrade the hardware to make the systems compatible.

B. The pre-installed software provided shall be user friendly, and commercially available. It shall operate seamlessly within the system architecture and provide the described functions in this Specification.

C. Two master copies of the MDS software, including all application software, operating system software and licenses shall be provided electronically on a media type agreed upon by WMATA.

D. The master copies shall be provided in a neatly arranged, labeled, three-ring binder with plastic inserts. The minimum information shall be clearly identified on the binder and on the media (e.g. CD/DVD):
1. Contents/Title
2. TCR location
3. Contract number and date
4. Versions
5. Software revision dates

PART 3 - EXECUTION

3.01 DELIVERY, STORAGE AND HANDLING

A. The Contractor shall take all measures necessary to protect the MDS equipment from damage or marring during shipment, installation and testing and until the Project Manager accepts the system. If the equipment suffers any damage, from whatever cause, during this period, the Contractor shall replace it with new requirement, to the satisfaction of the Project Manager at no additional cost to the Authority.

3.02 INSTALLATION

A. The Contractor shall install the MDS equipment (including all networking equipment) as per drawings of proposed layout installation provided by the Contractor and approved by the Project Manager.

B. The Contractor shall install each MDS terminal, complete with its program and all auxiliary equipment necessary to provide a completely operational MDS assembly performing all functions outlined in these Specifications.

C. MDS equipment shall be mounted in the TCR in a position permitting convenient use of the panel without interfering with other equipment or access to the room.

D. The Contractor shall fully load and set up the computers at each location with all software installed and pre-tested.

E. MDS equipment and cabinets shall be vibration proof, yet securely mounted to the floor and operate within the parameters as set forth within 34 42 19 – ATC Environmental Requirements.

3.03 TESTING

A. The Contractor shall perform testing in accordance with Section 34 42 81 – Basic ATC Test and Inspection Requirements.

B. The MDS shall be interconnected and tested with the ATC equipment, neighboring TCRs and Central Monitoring location.

C. The Contractor shall perform a Type Acceptance Test on the first complete MDS furnished if its design differs in any respect from a MDS previously accepted for regular use on WMATA. This test may be witnessed by the Project Manager. The Contractor shall notify the Project Manager in writing at least two weeks prior to the time this test is to take place.

D. The Contractor shall also factory test each completed MDS and its associated functions according to a test procedure which has been prepared in accordance with Section 34 42 81 and Section 34 42 88 of these Specifications and previously approved by the Project Manager. This test may be witnessed by the Project Manager. This test shall be successfully completed and the results approved by the Project Manager before the equipment is shipped from the factory.

E. The Contractor shall provide field test procedures to test each completed MDS along with its associated interfaces for approval from the Project Manager.

F. The Contractor shall field-test each installed MDS assembly along with its interfaces to according to the approved set of field set procedures.

G. The Contractor shall notify the Project Manager at least one week before the commencement of each of the specified field tests unless otherwise directed by the Project Manager.

3.04 MANUALS AND TRAINING

A. The Contractor shall provide WMATA staff with training in the proper operation and maintenance of the MDS in accordance with Section 34 42 93 - ATC – Training Courses

B. The Contractor shall provide WMATA with manuals developed in accordance with Section 34 42 92 - ATC – Instruction Manuals.

C. The Contractor shall provide training courses for the following personnel:
   1. Field Maintainers
   2. Engineers

D. Field Maintainer's MDS Training Course

1. The Contractor shall provide on the Authority's premises, for its operators, presentations of a course of classroom and hands-on instruction in the operation and maintenance of the complete MDS.
2. This instruction shall cover all aspects of operation and maintenance of the MDS, including a description of all interfaces and maintenance of networking equipment.

E. Engineer's Training Course for LCP subsystem
1. The Contractor shall provide on the Authority's premises, for certain engineering personnel, presentations in a course of classroom and hands-on instruction in the programming, maintenance, and configuration of the MDS.
2. The presentation of this course shall occur during the final installation stages of the MDS. This instruction shall cover all aspects of setup, programming, operation and maintenance of the MDS equipment.

END OF SECTION

SECTION 34 42 43

ATC VITAL RELAYS

PART 1 - GENERAL

1.01 SECTION INCLUDES

A. This Section specifies the design, furnishing, installation, documentation and testing requirements of all relays to be used in circuits which are vital to the safety of train control or operation. This shall include biased neutral relays, switch operating relays, switch overload relays, vital DC timer relays, vane type AC track relays and special purpose DC neutral relays.

B. The Contractor shall furnish and install all such vital relays required to provide a complete working ATC system as specified herein.

1.02 RELATED SECTIONS

A. Related work specified elsewhere shall include, but not be limited to, the following Sections:

1. Section 34 42 16 Basic Circuit Requirements.
2. Section 34 42 45 ATC Cabinets for Relays and PC Cards
3. Section 34 42 55 Track and Alarm Indication Panels
4. Section 34 42 71 ATC – Racks and Cable Trays
5. Section 34 42 77 ATC – Tagging and Marking
6. Section 34 42 81 Basic ATC Test and Inspection Requirements
7. Section 34 42 88 ATC – Quality Assurance

1.03 QUALITY ASSURANCE

A. The Contractor shall factory test each vital relay and record the results on an applicable AAR "Office Record of Test" form, in conformance with the recommendations of the AREMA Communications & Signal Manual, Part 6.4.5 (Alternating Current Relays), and Part 6.4.1 (Direct Current Relays).

B. The Contractor shall make a visual inspection of all vital relays and their plugboards at the time the relays are installed in the field to detect any obvious mechanical damage. The Contractor shall promptly replace any vital relays or plugboards which have sustained mechanical damage.

C. Upon installation of the relays, the Contractor shall conduct field and breakdown tests in accordance with a test procedure approved by the Project Manager. Results of the field and breakdown tests shall be recorded on approved Field and Breakdown Test Report forms.

D. Operational tests shall be conducted as prescribed in the applicable Sections of Section 34 42 81, Basic ATC Test and Inspection Requirements and Section 34 42 88, ATC – Quality Assurance.

E. Type acceptance testing will be required for any solid state vital DC timer relay proposed for use under this Contract.

F. Notification is required at least two weeks in advance of the Factory Test of the relays. The Contractor and/or the COTR may witness the testing. Upon completion of the testing, a certification shall be provided that shows the relay is certified by the Subcontractor and witnessed by the personnel present for witnessing. If no one is present to witness the test and proper notification for testing was provided, the certification form may be provided with the comment witness not present. The relays shall be tested, shipped, and delivered to the field in the following manner:

1. Certified relays will be delivered to the field location in sealed containers with an official copy of the certification for each relay. Relays shall be packaged complete with factory test data and the specific location for each relay. This shall include Function (name), Rack, Row and Position.
2. In the event that the relays for a given location undergoing certification incur a failure rate of 3% or greater during factory testing, relative to the total quantity of vital relays required for that specific location, all relays shipped up to that point in time will be considered as failing until acceptable remediation has been provided and approved.
3. Each relay failing the factory test shall not be shipped to the field until they have been serviced and successfully certified.

1.04 SUBMITTALS

A. The Contractor shall submit a detailed description of each type of vital relay, indicating the circuits in which each type of relay is to be used. The Contractor shall obtain the Project Manager's written approval for each type of vital relay and its proposed application before proceeding with the manufacture or procurement of the relays. The detailed description should include, at a minimum, the following:

1. Complete technical data, which includes MTBF statistics for each type of relay.
2. A certificate to identify the steps taken to ensure that the relays are suitable for vital application, as defined in Section 6 of AREMA Communications & Signal Manual.
3. An itemized list of devices to be supplied that relates the given drawing reference number of any devices with the manufacturer's part number.

B. The Contractor shall submit a Breakdown Test Procedure for field testing vital relays and a Breakdown Test Report form for recording the results thereof.

C. The Contractor shall submit factory test reports for the wired plugboards associated with all vital relays. These documents shall be required for "delivery approval" by the Project Manager. See Part 3.03, Measurement for Partial Payments.

D. The Contractor shall submit Field Test Report forms and Breakdown Test Reports to the Project Manager within seven days of performance of the tests. These reports shall be required for "installation approval" by the Project Manager. See Part 3.03, Measurement for Partial Payments.

E. The Contractor shall provide the Authority with 3 paper copies and 3 electronic copies of Relay Manuals. Each manual shall contain comprehensive descriptions and illustrations of each type of vital relay (and plugboard) provided under this

Contract, to include such items as relay operation, adjustment, contact insertion and removal, testing and internal wiring diagrams.

1.05 DELIVERY, STORAGE AND HANDLING

A. Vital relays shall be shipped separately from the racks in which they are to be mounted. They shall be packaged individually, each in a sturdy corrugated cardboard carton with the drawing number of the relay printed on the outside of the carton. Upon shipping, vital relays shall be stored in a protected area until installation.

B. The Contractor shall supply and ship each vital relay with a “shock watch” sensor clip to provide warning of excessive impact.

C. Vital relays shall not be abraded or damaged during shipping and handling and relay operating characteristics shall not have been altered. Any damage noted, including a “shock watch” being triggered, shall be reported to the Project Manager. Damaged relays will not be accepted and shall be replaced at no additional charge to the Authority.

PART 2 - PRODUCTS

2.01 BASIC REQUIREMENTS

A. All vital relays supplied under this Contract shall be of the plug-in type furnished with transparent covers which are fire resistant and do not emit toxic gasses when exposed to fire.

B. Provisions shall be included for mounting a typed or printed relay name tag on the front of this cover. The name tags shall be easily replaceable, but shall not come off due to vibration.

C. Arc suppression for all vital DC relay coils shall be built into the relay or its plugboard, or shall be mounted to the back of the plugboard in a manner acceptable to the Project Manager. This arc suppression shall be of the capacitor-resistor type and shall prevent the load presented to a contact controlling that relay from exceeding the following values during steady state or switching conditions:

1.	Maximum volt-ampere load	15VA
2.	Maximum load current	1 ampere
3.	Maximum switched voltage	250 volts

D. When three vital DC relays, suppressed as specified herein, are connected in parallel and operated from 28 volts, any vital relay front or back contact which breaks this load shall be capable of at least five million operations at this load without the contact resistance, measured with a 10 mA current, exceeding five ohms.

E. All vital DC relays furnished shall conform to the applicable recommendations established by the AREMA Communications & Signal Manual, Part 6.2.1 (Tractive Armature DC Neutral Plug-in Relay) and Part 6.4.1 (DC Relays).

F. All vital DC timer relays shall conform to the recommendations established by the applicable sections of Part 6.1.20 (Time Element Relay) of the AREMA Communications & Signal Manual.

G. All AC track relays shall conform to the recommendations established by Part 6.4.5 (AC Relays) and Part 6.1.35 (AC Induction Type Relay) of the AREMA Communications & Signal Manual.

H. All vital relays shall be the equivalent of and compatible with US&S PN-150 type or the GRS (Alstom Signaling Inc.) "B" type.

I. All vital relays and their plugboards shall be equipped with mechanical registration devices to prevent relays of the wrong style, contact arrangement, or operating characteristics from being mounted on any given plugboard. These registration devices shall be applied to the vital relays and their plugboards prior to mounting the relays on the plugboards for factory testing of rack wiring. See Section 34 42 45, ATC Cabinets for Relays and Printed Circuit Boards.

2.02 BIASED NEUTRAL RELAYS

A. Biased neutral relays shall have a nominal operating voltage of 28 volts and shall be capable of operating continuously and successfully without resultant damage when voltages in a range from 18 to 35 volts inclusive are applied to their operating circuits.

B. Biased neutral relays shall be so designed that their armature will not pick up when their permanent magnet is demagnetized. These relays shall also be designed so that a fault causing an interruption to the normal magnetic circuit of the relay shall not cause the relay armature to pick up while no current is being applied to the relay coils.

C. Biased neutral relays shall be so designed that up to at least 50 times working energization applied for two seconds at both normal and reverse polarity will not affect their operating characteristics by more than two percent, and will not pick up their armature, i.e., "break" their back contacts and "make" their front contacts, on reverse polarity.

D. Each biased neutral vital relay shall have a minimum of either:
   1. Four independent front contacts, two dependent front-back contacts, and two independent back contacts, or;
   2. Six dependent front-back contacts.

E. All front contacts shall be silver-to-metalized carbon which conform to the recommendations of Part 6.2.1, paragraph 12, of the AREMA Communications & Signal Manual. Each biased neutral relay shall have a minimum of two silver-to-metalized carbon back contacts which conform to the same recommendations unless otherwise approved by the Project Manager.

F. All biased neutral relays furnished under this Contract shall be identical.

2.03 SWITCH OPERATING RELAYS

A. Relays used to control the polarity of the operating current for switch-and-lock movements shall meet the following requirements in addition to the basic requirements specified above:
   1. The operating voltage range shall be from 22 to 35 volts inclusive, unless otherwise approved by the Project Manager.
   2. A minimum of two front-back dependent contacts or two independent front contacts and two independent back contacts shall be provided.
   3. Each contact shall be equipped with a magnetic blow-out feature to effectively interrupt high currents and minimize contact wear. Each contact shall be capable of interrupting the normal switch-and-lock movement operating current 10,000 times without its resistance exceeding ten ohms measured at five amps.

B. All switch operating relays furnished under this Contract shall be identical.

2.04 SWITCH OVERLOAD RELAYS

A. Switch overload (stick) relays, used to detect an over-current condition during operation of a switch-and-lock movement, shall meet the following requirements in addition to the basic requirements specified above.
   1. Relays shall be equipped with two separately wired, non-biased coils; one to be series connected in the switch operating circuit to detect over-current conditions, the other coil to be operated from nominal 28 V DC and used as a holding coil in the overload stick circuit.
   2. Relays shall be furnished with a sufficient number of make-before-break contacts to perform the functions described in these Specifications. See Section 34 42 16, Basic ATC Circuit Requirements.

2.05 VITAL DC TIMER RELAYS

A. The timing elements of vital DC timer relays shall be electronically controlled. These relays shall be for nominal 28 volt DC operation, and shall operate successfully and without resulting damage with 26.5 volts to 31.5 volts applied to their operating circuits.

B. Each vital DC timer relay shall be equipped with a timing adjustment device, external to its cover, which can be sealed. When sealed, it shall be impossible to adjust the timing interval. When the device is unsealed, the timing interval shall be adjustable from less than five seconds to more than 15 minutes. The adjustment shall be in increments of one second or less. Once adjusted, the timing interval shall repeat with an error of no more than ±5 percent while the relay is operated at rated voltage ±5 percent, and at ±50 degrees F about the ambient temperature at which the interval was set. Alternately, once adjusted, the timing interval shall repeat with an error of no more than ±7 percent when the ambient temperature is between -40 degrees C and +71 degrees C and while the relay is operated at nominal rated voltage ±5 percent. For any voltage variation greater than ±5 percent (but within the voltage limits of the bus) under the above temperature conditions, the timing interval shall repeat with an error which shall not exceed 15 percent.

C. Each vital DC timer relay shall have a minimum of two dependent front-back contacts and two independent back contacts. All of the front contacts and the independent back contacts shall be silver-to-metalized carbon contacts which conform to the recommendations of the AREMA Communications & Signal Manual, Part 6.2.1, paragraph 12.

D. The vital timer relays shall begin their preset timing interval when energy is applied. All of the back contacts shall remain closed until the completion of the timing interval, at which time the back contacts shall open and the front contacts shall close. The front contacts shall then remain closed until energy is removed from the relay. When energy is removed from the relay, the front contacts shall open and the back contacts shall close. The relay shall be so designed and constructed that once energy has been removed from its input terminals, the full preset pick-up time interval shall elapse (when power is reapplied) before the relay can pick-up.

E. All vital DC timer relays furnished under this Contract shall be of the same type and shall be equivalent to Microchron Timer Relays, Drawing No. 50800-100, GR.2, as manufactured by Alstom Signaling Inc. (formerly General Railway Signal Company) of Rochester, New York.

F. The Contractor shall furnish and install any timer repeater relays required by these Specifications, or necessary to meet the demands of the circuits, at no additional cost to the Authority.

2.06 AC TRACK RELAYS

A. Requirements for All AC Track Relays:

1. AC track relays shall be plug-in, two element, 60 Hz, vane type induction relays. They shall be capable of operating continuously and successfully without resultant damage with 100 to 135 volts, inclusive, applied to the local winding, and with 0.75 to 5.0 volts, inclusive, applied to the control winding.
2. Each AC track relay shall have a minimum of two dependent front-back contacts. Each front contact shall be of the silver-to-metalized carbon type.
3. These relays shall not be equipped with breathers.
4. AC track relays shall conform to the recommendations established by Part 6.1.35 (AC Induction Relay) of the AREMA Communications & Signal Manual. These relays shall also conform to the recommendations established in Part 6.2.1 (Tractive Armature DC Plug-in Relay) of the AREMA Communications & Signal Manual insofar as base plate, plugboard and mounting are concerned.
5. Solid State or Electronic Vane Relays such as the Ansaldo PV-250E or the Alstom SSVR or equivalent are acceptable with the approval of the Project Engineer.
6. All AC track relays furnished under this Contract shall be identical.

2.07 SLOW RELEASE RELAYS

A. Vital slow release relays shall be of the direct current, neutral, tractive armature type and shall meet the following requirements in addition to the basic requirements specified above:
   1. Slow release relays shall have a nominal operating voltage of 28 volts DC and shall be capable of operating continuously and successfully without resultant damage when voltages in a range from 14 to 35 volts inclusive are applied to their operating circuits.
   2. Slow release relays shall have a minimum release time of 2.00 seconds at 28 volts DC input.
   3. Each slow release relay shall have a minimum of four independent front contacts, two independent back contacts, and two dependent front-back contacts.
   4. All contacts shall be silver-to-metalized carbon, which conform to the recommendations of Part 6.2.1 (Tractive Armature DC Plug-in Relay), of the AREMA Communications & Signal Manual.

B. All vital slow release relays furnished under this Contract shall be identical.

PART 3 - EXECUTION

3.01 INSTALLATION

A. All vital relays shall be rack mounted.

B. Vital relays shall be arranged in racks as shown on approved rack arrangement plans. Relays shall be mounted at their pre-assigned locations on the racks only after the racks have been permanently mounted in the Train Control Room.

C. All AC and DC power buses shall be open while installing relays. These buses shall not be reconnected until all relays have been installed.

3.02 SPECIAL REQUIREMENTS

A. Each biased neutral relay and each track relay, or their relay-repeater combinations, shall have at least one spare dependent front-back contact or one spare independent front and one spare independent back contact. This requirement shall be met throughout the installation and test period and at the conclusion of all field corrections.

B. One Normal and one Reverse Switch Operating Relay shall be provided for each switch-and-lock movement.

C. One Switch Overload Relay shall be provided for each switch-and-lock movement.

D. Each track relay or track relay-repeater combination shall have one back contact wired out to a plug coupler for use by a track indication panel, as specified in Section 34 42 56, ATC – Interlocking Control Panels. If the vital track relay is repeated by a non-vital logic relay, a contact on the non-vital repeater relay may be used for this purpose.

E. No more than 90 percent of the available relay space in each relay rack shall be filled at the time of installation, and no more than 95 percent of the available relay space in each relay rack shall be filled upon completion of all field corrections and testing.

F. Where vital relays are added to existing Train Control Room racks, the new relays shall be mounted in conformance with the existing relays, i.e., in such a manner that the fronts of all relays in the rack are in the same vertical plane.

3.03 MEASUREMENT FOR PARTIAL PAYMENTS

A. Vital relays will be measured for partial payments on a unit basis. The "unit" shall include the relay, a completely wired and mounted plugboard of the proper type as specified in Section 34 42 45 (ATC Cabinets for Relays and PC Cards), all the hardware required to register and mount the relay onto the plugboard, and the correct relay name tag.

B. Factors which will be considered when measuring vital relays for partial payments will include:
   1. Delivery of the relays and their associated wired plugboards, and submission and approval of the required plugboard Factory Test Reports by the Project Manager.
   2. Installation of the relays, submission of the required Field Test Record forms and Breakdown Test Reports, and approval of the installation by the Project Manager.

END OF SECTION

SECTION 34 42 49

ATC SIGNAL WIRE AND CABLE

PART 1 - GENERAL

1.01 SECTION INCLUDES

A. This section includes the requirements for the design, manufacturing, supply, installation, documentation, performance and testing of electrical wire and cable used in WMATA wayside ATC Systems.

B. This section includes, but is not limited to, the requirements of the following:
   1. Internal Signal Wire and Cable used in Train Control Rooms (TCRs), Wayside cases, and inside train control equipment modules and housings.
   2. External Signal Wire and Cable exterior to the TCRs and signal equipment housings, which include:
      a. Signal Cables;
      b. Control and Indication Cables; and
      c. Negative Propulsion Return Cables.

1.02 RELATED SECTIONS

A. Related work specified elsewhere shall include, but not be limited to, the following Sections:

1.	Section 34 42 15	Basic ATC Equipment Requirements
2.	Section 34 42 21	ATC Power Distribution Systems
3.	Section 34 42 22	ATC Lightning/Surge Protection and Grounding Systems
4.	Section 34 42 25	ATC Data Transmission System
5.	Section 34 42 48	ATC Plug Connections
6.	Section 34 42 56	ATC - Interlocking Control Panels - Hardwired
7.	Section 34 42 61	ATC - Audio Frequency Track and Loop Circuit Layouts
8.	Section 34 42 62	ATC - Impedance Bond Layouts
9.	Section 34 42 63	ATC - Power Frequency Track Circuit Layouts
10.	Section 34 42 64	ATC - Track Switch Operating Layouts
11.	Section 34 42 65	ATC - Track Bonding Layouts
12.	Section 34 42 67	ATC - Marker Coil Layouts
13.	Section 34 42 68	ATC - LED Signal Layouts
14.	Section 34 42 69	ATC – Snowmelter Elements
15.	Section 34 42 70	ATC – Snowmelter Control Cases
16.	Section 34 42 71	ATC - Racks and Cable Trays
17.	Section 34 42 73	ATC - Conduit
18.	Section 34 42 77	ATC - Tagging and Marking
19.	Section 34 42 78	ATC - Miscellaneous Components and Materials
20.	Section 34 42 96	ATC - Technical Appendix

1.03 SUBMITTALS

A. The Contractor shall submit the following in accordance with the Contract Documents to the Project Manager for approval:
   1. Results of Certified Test reports which include all tests conducted on finished Internal Wire and Cable as specified herein and Parts 10.3.14 and 10.3.24 of the AREMA C&S Manual.

2. Test reports of cable tests conducted in the field in accordance with approved testing procedures for all External Wire and Cable with a Pass/Fail criteria and status.
3. For internal wire and cable, technical data in accordance with the requirements herein and Parts 10.3.14 and 10.3.24 of the AREMA C&S Manual.
4. Detailed product data, samples, shop drawings, data sheets, and specifications, including, but not limited to the following:
   a. Qualification samples in accordance with Section 1.04 below.
   b. Shop drawings showing the method and materials for external wire and cable support in manholes, pull chambers, and on tunnel walls, as applicable.
   c. A program for maintaining and assuring the mechanical and electrical integrity of all external cables during pulls into pipe or conduit.
   d. Manufacturer's recommended pulling tension for each type of cable to be used, for both cable grip and core hitch methods. The formula(s) for determining the multi-cable pull calculations shall also be included. This information shall be submitted prior to any cable pull.
   e. Pre-printed data sheets for all external cables which shall include samples of the following:
      1) Certified Test Report;
      2) Inspection Sheet for Wire and Cable;
      3) Physical Test Report; and
      4) Quality Assurance Traceability Schematic
   f. A certified list of each external cable manufacturer's railway/rapid transit signal installations for the past ten years and proof of the same.
   g. Each external cable manufacturer's (and, where applicable, each insulation and/or jacket material manufacturer's) Quality Assurance Program and proof of tenure.
   h. Test procedures for Wire and Cable and all insulating material
5. Pull Sheets shall be submitted to the Project Manager, at least one week prior to each cable pull. Pull Sheets shall include, but not limited to, the following:
   a. Date of proposed pull;
   b. Cable nomenclature(s);
   c. Cable type(s);
   d. Cable routing;
   e. Recommended pulling method;
   f. Maximum recommended pulling tension as determined by the type of cable and pulling method, or, for multi-cable pulls, by calculation using the applicable formula(s).
   g. Room for recording the date of the actual pull, the maximum pull tension experienced during the pull, and any other pertinent information concerning the pull
6. Approved Pull Sheets shall be returned to the Contractor prior to the proposed pull. The Contractor shall record the date of the actual pull, the actual method used, the maximum tension experienced during the pull, and other pertinent information, and resubmit the Pull Sheet(s) to the Project Manager.

1.04 QUALIFICATION OF SIGNAL WIRE AND CABLE

A. Each manufacturer shall provide full technical data which demonstrates their (and, where applicable, the cable insulation manufacturer's) compliance with the requirements of this Section and Section 7 of ICEA S-95-658 for each specified wire and cable type to be provided.

B. Each manufacturer (and, where applicable, the insulation and/or jacket insulation material manufacturer) shall conduct the required qualification or prototype testing which demonstrates compliance with the requirements of these Specifications and Section 7 of ICEA S-95-658 for each specified wire and cable type to be provided.

C. All qualification test data shall be submitted in accordance with Section 1.07 below.

D. Internal Wire & Cable to be used for qualification shall be a minimum of 20 AWG 0-600V and 12 AWG rated 0-2000V

E. The cable manufacturer shall submit samples of each type of wire and cable to WMATA for evaluation.

1.05 MANUFACTURER QUALIFICATION FOR ALL WIRE AND CABLE

A. All cable manufacturers supplying wire or cable for this Contract must be approved by the WMATA Project Manager. The Contractor shall provide all of the data necessary for the demonstrations and tests required by the designated Project Manager. Approval shall be based on the following criteria:

1. Past Performance and Experience
   a. The cable manufacturer must have at least ten years of successful experience in supplying cable to the railway/rapid transit industry for use as vital circuit signal control cable.
2. Quality Assurance Program
   a. The manufacturer of cables and, where applicable, the cable insulation and/or jacket insulation material manufacturer(s), shall have an established Quality Assurance Program which meets ISO-9001 requirements and have been continuously in effect for at least seven years. Efficient methods of production, test, and product evaluation shall be used, but prime concern shall be focused on the necessary formal quality requirements to ensure that cable failure cannot be attributed to actions or lack of actions by the manufacturer.
   b. If the cable manufacturer has proprietary cable insulation material formulations which are compounded and prepared at another, non-owned facility, this facility shall be subject to the same Quality Assurance Program procedures, systems, and requirements that have been approved for the cable manufacturer's use in its own facilities, and shall be subject to audit by WMATA.

B. Approval of a manufacturer or vendor may be withdrawn if any of the following conditions exist:

1. Performance in meeting test requirements or field experience indicates that the specifications herein listed or other contract requirements have not been met.
2. The manufacturer, without prior notification to the purchaser, changes a design or material.

1.06 QUALITY ASSURANCE FOR SIGNAL WIRE AND CABLE

A. GENERAL

1. The manufacturer shall be responsible for the performance of all testing and production inspection requirements, to assure that their product continues to meet the parameters specified herein.

2. The manufacturer is required to certify compliance with this specification for each production run. A certificate of compliance must be submitted with each shipment. Any changes made that affect the material, physical properties or electrical characteristics will require requalification.
3. WMATA reserves the right to place quality assurance representatives in the wire and cable manufacturer's facility to ensure conformance to the specification requirements in any phase of manufacturing, inspection and testing.
4. All wire and cable which does not comply with this specification is subject to rejection. It shall be the manufacturer's responsibility to collect all rejected wire or cable for disposal, even if it has been shipped to the site.
5. Test Reports shall be submitted in accordance with Section 1.07.
6. The Contractor shall monitor the manufacture of the insulation and jacket material(s) and the wire and cable to ensure that the approved Quality Assurance Program is being followed and that the wire and cable are being manufactured in accordance with these Specifications and the approved submittals.
7. Each finished batch of wire and cable shall be traceable to the test data on file for each step in its manufacturing process.
8. Production tests shall be conducted as per Section 6 of ICEA S-95-658. However, the tests which must be conducted during manufacturing on 100% of the wire and cable shall include, but not be limited to, the following:
   a. Individual insulated conductors, prior to cabling, shall be either AC or DC water tank tested.
   b. Voltage tests required for each reel of finished wire or cable after application to the shipping reel shall be either the AC Voltage test or the DC Voltage test.
   c. DC Resistance
   d. Insulation resistance
   e. Shield continuity
9. Voltage tests shall be conducted in accordance with Section 2.2 of ICEA T-27-581.

B. WMATA reserves the right to witness any or all of the above tests and shall be notified 60 calendar days in advance of each of the above tests.

C. The Contractor shall prepare and certify a report for each of the above tests, to include all pertinent facts concerning the conditions and results of that test, plus the backup information required.

1.07 TEST AND INSPECTION REPORTS

A. All Certified Test Reports shall include, but not limited to, the following information:
1. Report number;
2. Date and location of test;
3. Description of test and test conditions;
4. Complete cable or wire description identifying the following:
   a. Wire/Cable Size;
   b. Voltage;
   c. Temperature Ratings;
   d. Manufacturer;
   e. Trade name and generic name;
5. Lot, batch, and/or reel identification number;
6. Quantitative test results;
7. Summary of test results;
8. Information on the components of the cable tested to include batch numbers and

physical and electrical properties; and
9. Traceability data.

B. Submit the following signed and completed documents along with each Certified Test Report:
1. An Inspection Sheet for Wire and Cable.
2. A Physical Test Report

C. Inspection Sheets are required to be signed and completed prior to the shipment of any wire and cable to WMATA. The Inspection Sheets shall include, but not limited to, the following information:
1. Cable manufacturer, address and contact information;
2. Cable drum number, length, and test certificate number;
3. Drum constriction, strapping and markings;
4. Month and year of cable manufacture;
5. Length of cable on the reel;
6. Roll direction;
7. Cable is clearly marked with size and listing information;
8. Conductor resistance test results;
9. Insulation resistance test results; and
10. Signed confirmation from manufacturer that the manufactured cable meets the requirements of this section.

PART 2 - PRODUCTS

2.01 GENERAL

A. All internal and external wire and cables shall be vermin proof.

B. All internal and external wires and cables shall be capable of a 40-year average service life.

C. The boundary between external and internal wire and cable shall be the entrance rack located in each TCR. All wire and cable exiting the TCR shall be classified as external cable.

2.02 NFPA 130

A. All wire and cable shall meet the requirements of the latest revision of NFPA 130, Standard for Fixed Guideway Transit and Passenger Rail Systems.

B. In the event of conflicts between NFPA 130 and this specification, the more stringent requirement shall take precedence.

2.03 INTERNAL WIRE AND CABLE

A. All internal wire and cable shall meet the requirements of the following standard including but not limited to, material, wire construction, insulation thickness, identification, performance, packaging and color coding:
1. AREMA C&S Manual Part 10.3.14, Recommended Design Criteria for Ethylene Tetrafluoroethylene Copolymer (ETFE) Insulated Signal Wire and Cable
2. AREMA C&S Manual Part 10.3.24, Recommended Design Criteria for Ethylene Tetrafluoroethylene Copolymer (ETFE) Insulation and Jacketing for Wire and Cable

B. Solid conductors shall be soft annealed copper, coated in accordance with Type I wire as

specified in Part 10.3.14 and Part 10.3.24 of the AREMA C&S Manual.

2.04 EXTERNAL WIRE AND CABLE

A. GENERAL
1. All external cable furnished shall be of rugged construction.
2. All external cable shall be suitable for use in the environment encountered in the WMATA Rail and Rapid Transit System and shall be certified for continuous operation at 90 degrees Celsius in wet or dry locations, whether in trays, troughs or conduits above or below ground, exposed runs, or direct buried.
3. Except for cables described in section 2.06, all insulation and jacketing compounds offered on this Contract by the cable manufacturer shall be formulated, applied, and, where applicable, vulcanized by the cable manufacturer in its own facilities. If the cable manufacturer does not normally compound and otherwise prepare insulating material in its own plant, it is acceptable for the cable manufacturer to have its proprietary formulations compounded and prepared at another non-owned facility which complies with the manufacturing and end product quality requirements specified herein.
4. All conductors, insulation, direct current resistance and jackets shall be in accordance with ICEA S-95-658, ASTM B8 and ASTM B33 and the requirements specified herein.

B. INSULATION REQUIREMENTS
1. All External Wire and Cable insulation shall meet the physical property requirements as per ICEA S-95-658 Section 3, in addition to the requirements specified herein.
2. The insulation of external signal cables shall be either Grade E-1 or E-2 ethylene propylene rubber as per ICEA S-95-658.
3. The insulation of negative propulsion return cables shall be Grade E-2 ethylene propylene rubber as per ICEA S-95-658.
4. The insulation or insulation system of external wire and cable shall fit tightly to the conductor and shall be free-stripping. Insulation thickness shall be in accordance with ICEA S-95-658.
5. Grade E-1 and E-2 insulation as defined in ICEA S-95-658 shall also include the following requirements:
   a. Material: Rubber-like
   b. Vulcanized during Construction
   c. Chlorine content, maximum % by weight: Zero

C. CONDUCTOR REQUIREMENTS
1. Conductor resistance shall be in accordance with ICEA S-95-658.
2. Signal conductors shall be soft annealed copper as per ASTM B33 and stranded as per ASTM B8, and shall also meet the following requirements:
   a. Coating shall be of continuous tin alloy (vital signal cable only)
   b. Stranding:
      1) Conductors less than 14AWG shall be in accordance with ASTM B8, Class B
      2) Conductors 14AWG to 00 shall be in accordance with ASTM B8, Class C
3. Negative Propulsion Return Conductors shall be soft annealed copper as per ASTM B33 and stranded in accordance with ASTM B8 and shall meet one of the following requirements:
   a. Extra-flexible, 1000 KCMIL Ropelay cable, Class G Stranded (427 strands)
   b. Standard 1000 KCMIL Ropelay cable, Class D stranded (127 strands)

c. 500 KCMIL Ropelay, Class G Stranded (259 strands) or better

D. JACKET REQUIREMENTS
1. Material - rubber-like, thermosetting, low smoke, non-halogenated, cross-linked polyolefin, vulcanized during construction in accordance with ICEA S-95-658
2. Outer jacket:
   a. Vulcanized during construction
   b. Oxygen index minimum as per ASTM D2863.
3. Cable Jacket Specification
   a. Chlorine content,
      1) Maximum % by weight 0.2
   b. The following physical properties shall be in accordance with ICEA S-95-658
      1) Tensile strength,
      2) Tensile stress
      3) Physical properties after aging
4. Surface resistivity shall be a minimum of 100 megaohms

E. NEGATIVE PROPULSION RETURN CABLES
1. Insulation requirements shall be in accordance with the following:
   a. Jacket:
      1) Overall non-metallic jacket thermoset, chloro-sulfonated polyethylene or cross-linked polyolefin.
      2) Jacket materials other than cross-linked polyolefin shall comply with ICEA S-95-658.
      3) Insulation Power Factor: 2% maximum.
      4) Jacket shall be bonded to the insulation to prevent moisture pockets resulting in a minimum peel strength of the jacket from insulation of 4 pounds/inch of width
   b. UL labeling: Type RHW-2.

2.05 ASSEMBLY OF MULTICONDUCTOR SIGNAL CABLE

A. INDIVIDUAL EXTERNAL WIRE CONDUCTORS
1. All single conductor external cables shall fulfill the insulation and jacket requirements of this specification.

B. MULTICONDUCTOR SIGNAL CABLE
1. The term "multiconductor signal cable" shall be interpreted as meaning any multiconductor cable applied in circuits, either vital or non-vital, the function of which has a direct effect upon the operation of trains or the ability of the system or subsystems to implement control upon the trains.
2. All multiconductor external signal cable shall be assembled from conductors which meet the requirements of Section 2.04C Conductors.
3. Multiconductor external signal cables shall have 2, 5, 7, 9, 12, 14, 19, 27, or 37 conductors.
4. Multiconductor external signal cables containing more than two conductors shall contain 20-percent spare conductors or two spare conductors, whichever is greater. Local distribution cable shall contain ten percent spare conductors or one spare conductor, whichever is greater, except that two conductor local distribution cables (such as track circuit leads) will not require spare conductors.
5. Multiconductor external cable shall be made by assembling individual or twisted

pairs of insulated conductors into a tight cylindrical form. Individual or twisted pairs in a cable having more than two wires shall be assembled helically and with adjacent layers wound in opposite directions.

6. Twisted pairs shall consist of two individually insulated conductors cabled with a length of lay as short as good construction will permit, but not longer than ten inches. Where more than one twisted pair is included, the length of lay of adjacent pairs shall differ by a minimum of one-half inch. Twisted pairs shall not be provided in combination with individual wires in the same cable. Interstices shall be filled with moisture-resistant fillers.
7. A marker tape printed with sequential footages at one foot intervals shall be placed with the core. In addition to the footages this marker tape shall display, at intervals of no more than 30 inches, the name of the cable manufacturer and the year in which the cable was manufactured.
8. The complete core assembly shall be wrapped with flame-retardant core tape or tapes with a 12.5-percent minimum lap. As an option, the core assembly shall be encased in an extruded, flame-retardant, moisture resistant, elastomeric cushion layer of the following thickness:

Core Diameter Thickness	
(inches)	(mils)
0-1.50	47
1.501 & larger	62

9. When an extruded rubber cushion layer is used, a pull cord shall be included beneath the cushion layer to provide for efficient stripping of this layer. This cord shall be compatible with all other components of the cable.
10. The taped cable core shall be covered with suitable bedding tape(s) when flat metal armor tape is used or with an inner jacket when corrugated metal armor tape is used.
11. Multiconductor cables of eight (8) or more conductors shall have a 0.005-inch thick bronze (or a 0.007-inch thick copper alloy 194) corrugated or flat tape armor which shall be helically applied and with a minimum 20% overlap. An overall separator tape shall be applied over the armor tape to protect the armor from attack by the overall jacket material.
12. The core, with or without armor, shall be covered with an outer jacket having a nominal thickness in accordance with ICEA S-95-658, Table 4-5. When corrugated tape armor is used, the inner jacket or bedding tape shall be of sufficient thickness and so formulated to completely fill the voids on the underside of the corrugated metal tape. Cable jacketing material shall conform to the cable jacket specification contained herein.

C. Cable Identification and Conductor Markings
1. All external and internal wire and cables shall have the following information imprinted on the surface of the outer jacket at intervals of not more than three feet:
   a. Manufacturer's name
   b. Number of conductors
   c. Size of conductors
   d. Voltage rating
2. Individual conductors of multiconductor signal cables shall be imprinted at intervals of not more than six inches with the conductor identification. The identification shall be in the form of a number printed in both numeral form and English.
3. The cable and conductor markings shall be of a color which contrasts with the material on which it is imprinted and shall be of sufficient size to be easily

recognized. The markings shall be permanent.

2.06 CONTROL AND INDICATION CABLE

A. Control and indication cable for non-vital circuits

1. Control and Indication cable applied in non-vital circuits, i.e., circuits the functions of which do not control or affect the ability to control operation of trains, shall conform to the following requirements:
   a. Minimum conductor size 19 AWG
   b. Chlorine content of insulation, maximum percent by weight 0.2
   c. Inner jacket PE or LS TPPO
   d. Outer jacket LS TPPO as per ICEA S-73-532 section 7.1.6
   e. Chlorine content of jacketing materials, maximum percent by weight 0.2

2. Multiconductor Special Control and Indication cables permitted under this contract shall have twisted pairs as required for the application.

B. DISTRIBUTED COMPUTER INTERCONNECTION CABLE (CAT5e/CAT 6)

1. Cable to be used to provide communications between microprocessor based equipment used in the Automatic Train Control System shall be fiber optic cable or industry standard networking cable and shall be:
   a. Shielded twisted pair or shielded multiple twisted pair
   b. Have an overall jacket that is Low Smoke Zero Halogen
   c. Compliant with TIA/EIA 568.

2. All cables shall be suitable for the environment in which they are to be installed

C. FIBER OPTIC CABLE

1. Fiber Optic Cables and shall meet the requirements as specified in Section 32 42 50 – ATC - Fiber Optic Cable.

PART 3 - EXECUTION

A. All conductors shall be sized per the National Electrical Code, but shall not be less than the minimum conductor sizes specified herein.

B. Conductors shall be sized in such a manner that voltage drop at the farthest load does not exceed 3 percent during peak load conditions, except for switch machine cable power wiring as listed in section 3.07C.1.f.

C. Wires and cables shall be installed in a neat, workmanlike manner. Cables in trays or in troughs shall be laid therein. Cables shall be installed with a minimum amount of cross-over in the trays and troughs and shall be in accordance with the cable manufacturer's recommended bending radii. All exposed wires and cables entering or leaving equipment racks or housings shall be protected from abrasion.

D. Nylon straps shall be provided and installed for bundling and cabling of conductors where two or more single conductors of the same circuit are exposed in cable trays or cable troughs. Straps shall be installed approximately every five feet along the cable run. Wires of multiconductor cables exposed by the stripping of the cable jacket for terminations shall be trained in a neat, workmanlike manner and tied approximately every three inches with nylon straps.

E. There shall be no point-to-point redundancy of wires for increased current capacity.

F. Single conductor No. 14 wire shall be used for interconnecting switch machines and junction boxes, signal junction boxes and lamp compartments, and interconnecting other miscellaneous internal equipment.

G. The smallest size wire the Contractor shall use for power cross termination and power wiring shall be No. 14 AWG. If No. 14 does not satisfy the load current requirements, the wire shall be increased in size according to the load requirements, at no additional cost to WMATA.

H. Unless approved by the Project Manager in writing, there shall be no deviations to conductor sizes specified herein.

I. Multiconductor external signal cables containing more than two conductors shall contain 20 percent spare conductors or two spare conductors, whichever is greater.

J. Local distribution cable shall contain ten percent spare conductors or one spare conductor, whichever is greater, except that two conductor local distribution cables (such as track circuit leads) will not require spare conductors.

3.02 DELIVERY, STORAGE AND HANDLING

A. Shipping, storage and handling of internal and external wire and cable shall be in accordance with the recommendations contained in Part 10.4.1 of the AREMA C&S Manual, the applicable cable manufacturer's recommendations, and as further specified herein.

B. Cables shall be reeled in such a manner that both ends are accessible for testing on the reel. The Contractor shall ship each unit securely packaged and labeled for safe handling and shipment.

C. Mark each single-conductor cable and each multiple-conductor cable to show UL label, size, voltage, manufacturer and number of conductors in accordance with NEC requirements.

D. The Contractor shall store the cables in a dry and secure facility.

E. During storage and handling prior to final conductor termination, cable ends shall be sealed to prevent the entrance of moisture

3.03 MODULE WIRING

A. Module wiring shall be accomplished with solderless connections.

B. Minimum wire size shall be No. 22 AWG for stranded wire and No. 24 AWG for solid wire.

3.04 INTRA-RACK WIRING

A. All rack wiring shall be accomplished with solderless connections.

B. Wire used for rack wiring shall be stranded wire, minimum size No. 20 AWG, or multiconductor cables as specified herein. Where wires of a multiconductor cable are used for intra-rack wiring, any unused conductors shall be folded back and taped.

C. Rack wiring shall be neatly tied into compact bundles. The main bundles and branches shall be secured to the racks in a manner which shall preclude physical damage due to pressure or abrasion and prevent the wire weight from being supported by the wire terminations, connections, or plug connectors. The arrangement of the wire bundles and cables shall be such that they do not interfere with visual inspection, troubleshooting, or repair of the rack mounted equipment.

3.05 RACK-TO-RACK WIRING

A. Rack-to-rack wiring shall be accomplished with solderless connections using multiconductor cables as specified herein, or single conductors tied into bundles to form unjacketed multiconductor cables.

B. Unjacketed multiconductor cables shall consist of individual conductors of size 14 AWG or larger wire and shall have a maximum tie spacing of six inches.

C. All rack-to-rack wiring shall be routed via the overhead cable trays, with one foot of slack between the cable tray and each rack to which the cable is connected.

D. Cables shall not be pulled into the cable trays, but shall be laid loosely and neatly in the trays with a minimum of crosses.

E. Cable connections to all racks except the entrance racks shall be via plug connections, pre-terminated serial cable or CAT5e/CAT6 cable. Cable connections to the entrance racks may be made in the same manner as field wiring.

3.06 HIGH VOLTAGE WIRING

A. Internal wire used in circuits directly connected to the rails and internal wire used in circuits which operate at voltages in excess of 600 volts shall meet the requirements of this Section for 601 to 2500 volt service.

3.07 EXTERNAL CABLE APPLICATION

A. The Contractor shall be responsible for the sizing of all conductors greater than the minimum size specified, due to the application of the design or due to voltage losses caused by long cable runs. Where special cable configurations and/or conductor sizes larger than the minimum sizes specified herein are necessary to meet the specified operating conditions of the system, the Contractor shall provide same at no additional cost to WMATA. Increases in required conductor size shall be in accordance with the National Electrical Code.

B. If the Contractor's Train Control System requires the use of shielded cable, the Contractor shall provide the required shielded cables, and all additional related terminating required to provide single-point grounding of the shield at no additional cost to WMATA. The shielded cable supplied shall meet all requirements of these cable specifications and the shield shall be grounded as specified in Section 34 44 22, Lightning/Surge Protection and Grounding Systems. Armor tape shall not be considered as a substitute for a shield. Each electrically contiguous segment of armor tape shall be grounded at only one point.

C. The Contractor shall furnish and install the amounts of specified types of external cable necessary to provide a complete ATC System. The various types of cable and their applications shall include, but not be limited to, the following:

1. GROUP I - SIGNAL CABLES
   a. Audio Frequency Track Circuits
      1) An individual twisted pair cable, minimum size 16 AWG, shall be furnished and installed between the terminating point in the TCR and the associated trackside junction box for each impedance bond, track circuit bridging receiver unit, speed command transmission loop, or other track loop device.
      2) When these devices are located more than 4000 feet from the TCR, the minimum wire size shall be No. 14 AWG. This twisted pair shall not be part of a multiple twisted-pair cable between the TCR and a wayside distribution box.
      3) Individual twisted pairs for audio frequency track detection signals of the same track circuit (i.e. transmitter and receiver bond lines) shall be separated by at least two inches for any parallel length exceeding 700 feet. A grounded metal separator may be substituted for the two inch separation in cable troughs.
      4) Track cable leads for impedance bonds and speed command devices shall always terminate in an adjacent wayside junction box and then continue as specified to the track circuit or speed transmission device.
      5) In direct fixation construction, where the cable is installed in conduit between the junction box and impedance bond or speed command device, a continuation of twisted pair No. 14 or No. 16 AWG shall be used.
      6) In ballast construction, the cable between junction box and impedance bond and/or speed command device shall consist of No. 14 or No. 16 twisted pair cable (as applicable), installed inside cable protection of the type specified in Section 34 42 61, Audio Frequency Track and Loop Circuit Layouts, or in conduit along the edge of the crosstie. All cables and conduits shall be routed or protected in such a way to not constitute a tripping hazard.
      7) The individual cables between a terminating receiver wayside junction box and the running rails shall be 1000-volt class cable, minimum size No. 6 AWG.
      8) The Contractor shall furnish and install one spare twisted pair cable, identical to that specified for AF track circuit devices, along each main track between successive Train Control Rooms. The spare cable for each track between consecutive TCRs shall be terminated in both TCRs and shall be intermediately terminated in wayside junction boxes associated with AF track and speed command devices for that track. Wherever feasible, the spare cable shall be provided a service loop at each intermediate junction box without actually entering the junction box. At locations where the service loop is not feasible the spare cable shall be terminated in the junction box and the slider straps left in the open position.
      9) Maximum allowable mutual capacitance shall be 0.095μF/Mile.
      10) Nominal characteristic impedance shall be:
         a) At 2kHz: 180 ohms +/- 20%
         b) At 10kHz: 125 ohms +/- 20%
      11) Cable to cable crosstalk attenuation for two lengths of cable from

the same production run, laying side by side with cable jackets in direct contact with one another over their entire length shall exceed -90dB per 1000 feet for all frequencies between 2kHz and 10kHz

b. Speed Command Loops

1) A single conductor, size 10 AWG cable shall be installed adjacent to the running rails in a loop configuration, as shown on the Contract Drawings, to provide for the transmission of speed commands through interlockings, as required. The loops so formed shall be transposed, as required, to minimize coupling to the rails.

2) The No. 10 AWG cable used for speed command loops in interlockings shall have 600 volt insulation and be encased in suitably sized cable protection. See Section 34 42 61, Audio Frequency Track and Loop Circuit Layouts.

3) Where the No. 10 AWG loop wires serve as leads between the track loop itself, and:

a) an adjacent wayside junction box; or

b) an impedance-matching transformer

c) they shall be twisted a minimum of 3 turns per foot to minimize induction radiation and interference.

4) Speed Command Loop control wires from the Train Control Room to a wayside junction box shall be twisted pair, minimum size 14 AWG, with one cable used for each speed command loop.

c. Power Frequency Track Circuits

1) One-thousand-volt-class single conductor cable shall be furnished and installed for 60-Hz track circuits. The only exception is that, in areas of high concentration of 60-Hz track leads, these circuits may be accumulated into a dedicated 1000-volt-class multiconductor cable between the TCR and the wayside distribution junction box.

2) Cable for the feed end of each 60-Hz track circuit shall be minimum size No. 10 AWG.

3) Cable for the relay end of such track circuits shall be minimum size No. 14 AWG from the TCR to the wayside junction box.

4) Feed end track circuit leads extending more than 400 feet and relay end track circuit leads extending more than 1000 feet shall be increased in conductor size to compensate for the additional cable length resistance losses.

5) The cables between the wayside junction box and the running rail connections shall be single conductor, size 10 AWG, 1000 volt class, for both direct fixation and ballast construction.

6) Cable used for 60-Hz track circuit signal rail jumpers in crossovers shall be single conductor size 6 AWG, 1000-volt class, as shown on the Contract Drawings. The long signal-rail jumper used to connect the two "halves" of the signal rail in a diamond or universal crossover 60-Hz track circuit shall be installed in suitably sized cable protection, See Section 34 42 73 Conduit .

d. Line Circuit Cable

1) The Contractor shall furnish and install at least one 27 conductor

with a minimum size of 14 AWG cable if required, for line circuits between consecutive TCRs for the route segment included in this Contract, and between the first TCR for the route segment included in this Contract and the TCRs at the tie-in locations with the existing ATC System.

e. Controlled Signals
   1) A seven conductor, size 14 AWG cable shall be furnished and installed between each controlled signal and its associated Train Control Room or wayside distribution box. See Section 32 48 68, LED Signal Layouts.

f. Switch Machines
   1) The cables to be furnished and installed between each switch junction box and the TCR (or an interlocking distribution junction box) shall be a single eleven (11) conductor (minimum size 14 AWG) for control and indication and a single five (5) conductor (minimum size 10 AWG) for operation.
   2) The minimum size of the conductors for operation shall be increased to size 8 AWG if the distance from the switch junction box (or interlocking distribution junction box) to the TCR is more than 400 ft., and shall be increased to size 6 AWG if this distance exceeds 1000 ft. See Section 34 42 64, Track Switch Operating Layouts.

g. Marker Signals
   1) A five conductor, size 14 AWG cable shall be furnished and installed between each marker signal and its associated Train Control Room or wayside distribution box. See Section 34 42 68, LED Signal Layouts.

h. Route Selection Pushbuttons
   1) A seven or twelve conductor, size 14 AWG cable, as required, shall be furnished and installed between each route selection pushbutton and its associated wayside junction box or distribution box, or the TCR. See Section 34 42 66, Wayside Pushbutton Layouts.

i. Snowmelter Control and Indication
   1) A twelve (12) conductor, size 14 AWG cable shall be furnished and installed between the TCR and each snowmelter control case for control and indication purposes, and for energization of the SM case heaters. See Section 34 42 70, Snowmelter Control Cases.

j. Snowmelter Energy Supply
   1) The Contractor shall furnish and install a single conductor, No. 1/0 AWG (minimum size), 2000-volt-class underground cable between the propulsion power contact rail and the snowmelter control case via the Contact Rail Fuse Box.

k. Snowmelter Heating Elements

1) The Contractor shall furnish and install:
   a) A single conductor, size 6 AWG, 2000-volt-class underground cable between the snowmelter control housing and each switch point snowmelter heating element controlled from that housing, and;
   b) A single conductor, size 10 AWG, 2000-volt-class underground cable between the snowmelter control housing and each Ballast (Crib) heater unit controlled from that housing.
2) Maximum length for each of these cables shall be 75 feet unless otherwise authorized in writing by the Project Manager. See Section 34 42 69 - Snowmelter Elements, and the Contract Drawings.

l. Next Train Sign Control Cable
   1) The Contractor shall furnish and install a five conductor, minimum size 14 AWG cable from the TCR to the applicable AC Service Room in each Terminal Station. The routing for each of these cables shall be as previously approved by the designated Project Manager.

2. GROUP II - CONTROL AND INDICATION CABLE
   a. The Contractor shall furnish Control and Indication Cable (including Distributed Computer Interconnection Cable or Fiber Optic Cable) as required for installation between:
      1) ATC equipment in each TCR and equipment in the Communications Room
      2) ATC Equipment in neighboring TCRs

3. GROUP III - NEGATIVE PROPULSION RETURN CABLE
   a. Cable furnished and installed for the connection between impedance bond center taps (or shunt-bar center taps) and substation return or tiebreaker station return bus bars or moles shall be single conductor, 1000 KCMIL Class D (127 strand). See Section 34 42 65, Track Bonding Layouts.
   b. Cable furnished and installed for negative return cross bonding and switch bonding, and for connection between the impedance bonds and the running rails, shall be single conductor, extra-flexible, 1000 KCMIL, Class G (427 strand) or better.
   c. An alternative shall be pairs of single conductor, 500 KCMIL, Class G (259 strand) or better Ropelay with 2000-volt-class insulation.
   d. Cable furnished and installed for negative-return, compression-bolted or mechanical bushing insert rail-web bonding shall be single conductor, 500 KCMIL, Class G (259 strand) or better Ropelay with 2000-volt-class insulation. See Section 34 42 65, Track Bonding Layouts.

3.08 CABLE INSTALLATION

A. General
   1. The installation of wire and cable shall conform to Part 10.4.30 and Part 10.4.1 (Wires & Cables) of the AREMA C&S Manual except as modified herein.
   2. The Contractor shall notify the Project Manager at least 24 hours prior to installing cables.

3. The Contractor shall provide sufficient slack in cable conductors at all terminating posts to enable three reterminations of the conductor due to broken eyelets without reservicing or repotheading the cable. In types of installation where the cable cannot be constrained, sufficient cable slack shall be provided to prevent damage to the cable due to vibration.
4. Cable splices will not be allowed as a normal installation practice for non-vital circuits, and will not be permitted for cables carrying vital circuits. Cables carrying vital circuits over long distances, such as the wayside TCR-to-TCR cables, shall be terminated in wayside junction boxes in lieu of being spliced. Intermediate junction boxes shall not be installed prior to approval of their construction, configuration and location by the Project Manager. Upon written request, and only under extreme circumstances and because of installation hardship, will the use of cable splicing in certain non-vital cable runs be considered, all subject to the designated Project Manager's prior approval.
5. All cable entrance openings in equipment enclosures, manholes and junction boxes shall be sealed with either a compression type fitting or pliable sealing compound after the cable is in place. Sealing compound shall be used to seal the area around cable where the cable emerges from the end of a conduit, pipe or duct bank. The Contractor shall install conduit sealing bushings in the ends of all unused Train Control conduits to prevent fluids or gases in the conduits from entering the enclosure. A suitable lubricating medium (Cable Pulling Lubricant), as specified in Section 34 42 73, shall be used when pulling cables into conduit, pipe, or duct bank.
6. Where cable transfers from trays or troughs to conduit the ends of the conduit shall, for guidance, be fitted with plastic end bells to prevent damage to the cable.
7. Wherever multiple conductor cables are terminated the outer sheath of the cable shall be carefully removed to the point of cable entrance. At the end of the cable sheath or covering, two layers of plastic electrical tape shall be applied. As an alternative, the Contractor shall apply a heat shrink sleeve to the end of the cable sheath.

B. Buried Installation

1. Horizontal runs of buried cable greater than 15 feet shall be installed in PVC conduit per the requirements of this Section.
   a. Cable shall be buried to a uniform depth of not less than 30 inches. A bed of sand at least four inches thick shall be provided in the bottom of the trench. The cable shall be laid neatly, but loosely on this sand bed, with a minimum of cable crossings. The cable shall then be covered with a minimum of four inches of sand before backfilling. Loam or clay, free of lumps, stones or other debris, may be substituted for sand only with the prior written approval of the Project Manager. Backfill shall be compacted to not less than 95 percent of the maximum dry density of the respective materials as in accordance with determined by AASHTO Test Designation T-99.
   b. Cable passing under tracks or under ballast, or within track right-of-way shall normally be installed in conduit provided by others. Track right-of-way is defined as an area encompassing the ties and rail and extending two feet beyond the ends of each tie. When no conduit has been provided in such an area, the Contractor shall furnish Schedule 80 PVC conduit for this purpose and shall bury this conduit not less than 30 inches below the ties. See Section 34 42 73, Conduit
   c. In all areas beyond the right-of-way area where cables cannot be buried to a uniform depth of 30 inches, the Contractor shall, at no additional cost to WMATA, either install surface trench or install the cable in concrete

encased Schedule 80 PVC to the maximum uniform depth allowable by field conditions. At transition areas between buried and non-buried installation, the cable shall be protected by Schedule 80 PVC. Horizontal runs of PVC buried at or greater than a depth of 30 inches will not require concrete encasement.

d. Where cable leaves the ground at other than buildings, or in foundations or pedestal mounted junction boxes, it shall be protected by Schedule 80 PVC conduit.

e. The cables used as track leads between the rail connections and the wayside junction box shall be protected by vertical bootlegs of heavy duty, two-ply, fiber reinforced, one-inch I.D. neoprene hose where they pass through the ballast and the subgrade. Cable not extending beyond the far rail shall be placed in Schedule 80 PVC conduit which shall be clamped to the side of the crosstie as shown on the Contract Drawings.

f. Cable shall be installed in epoxy-coated rigid steel conduit wherever the cable passes under pavement or roadway. This pipe shall extend two feet beyond the edges of the pavement.

g. The Contractor shall be responsible for all shoring required to prevent undermining and cave-ins during cable burying operations and shall also be responsible for any damages or lost time resulting from inadequate shoring. Any trench over 3 feet deep shall be shored.

h. Where a buried cable enters a conduit, pipe, pedestal, or concrete foundation, for an equipment case, junction box, or other piece of Train Control equipment in which the cable is to be terminated, or bootlegs for track circuit or snowmelter connections, a five foot slack coil of that cable shall be installed in a trench below the point of entrance.

i. Cable carrying 600 volts or more shall not be installed in the same trench as signal or other low voltage cable without prior written consent of the Project Manager.

j. If signal, communication or track circuit cables, due to installation hardship, must be installed in the same trench as, or are required to cross cable carrying current at 600 or more volts, these low voltage cables shall be installed so that the distance between them and the high voltage cables shall not be less than 30 inches for all the cables. Where the high and low voltage cable cross or diverge, the area between the two types of cable shall be filled with sand to a distance of two feet along each type of cable from the point of their nearest proximity.

k. Locate, dig and backfill the cable trench with a minimum of disturbance to the right-of-way. The Contractor shall reestablish and/or repair any portion of the right-of-way and/or drainage system that may be disturbed by the cable burying operations. Excess spoils shall be evenly distributed along the right-of-way if digging operations are at the subgrade level and ballast has not yet been installed. If ballast has been installed, care shall be taken to cover the ballast during digging operations in order to keep the ballast clear of spoils. In the latter case, excess spoils shall be removed from the property and disposed of at no additional cost to WMATA.

l. Install cable marking tape at a depth of six inches while backfilling each cable trench.

C. Non-Buried Installation

2. Direct Fixation in Tunnel Areas

a. Train control cables shall be installed along the tunnel walls in an organized fashion within the area allotted to them. Cable crosses shall be kept to a

minimum. The topmost cable(s) shall be assigned for through runs with local cable(s) below them to facilitate cable branching into the wayside equipment in an orderly manner. Where the Contractor has more cable than will fit in the allocated area, the Contractor shall furnish and install additional approved cable mounting devices at no additional cost to WMATA. Cable runs along tunnel walls shall not interfere with access to grab bars located on the tunnel walls at access points to the safety walk.

b. Channel inserts will have been provided by others for the Contractor's use, mounted on approximately four foot centers in the tunnel walls. The Contractor shall furnish and install fastenings or mounting devices to secure the cables to the channel inserts. These fasteners shall be properly sized to the cable, or shall be adjustable to the proper size to support the cable without undue compression. Prior to cable installation the Contractor shall clear and remove any foreign material from the channel inserts where necessary. Where channel inserts are missing, the Contractor shall provide a substitute device which performs the same function and is acceptable to the Project Manager. Any additional work and materials involved with the installation of the substitute device shall be provided at no additional cost to the Authority.

c. Sufficient slack shall be provided in the cable between fasteners to allow for expansion and contraction of the cable without damage to the cable or the fasteners.

2. Installation in Trays, Troughs or Surface Trench

a. Cable installed in trays, troughs or surface trench shall be laid therein and not pulled into place. Cables installed in trays, troughs and surface trench shall have a minimum amount of crossover and shall not be pulled tightly around bends.

3. Installation in Conduit or Pipe

a. Remove any foreign material from conduits by using an appropriate mandrel. The Contractor shall then clear or swab dry each conduit or pipe before installing cable therein. It shall be the Contractor's responsibility to prove existing conduits prior to use. The Contractor shall maintain the conduits and/or pipe in a clean and dry condition during the installation process up to and including the time each conduit or pipe is sealed as specified, at no additional cost to the Authority.

b. The Contractor shall have an approved Pull Sheet in his possession for each cable pull executed, and shall record thereon the date of the pull, the method used, the maximum pull tension experienced for each applicable pull, and other pertinent data. The Contractor shall resubmit a copy of each completed Pull Sheet to the designated Contract Administrator within one week of the pull. See Part 1.08 G of this Section.

c. Conduct cable pulls in accordance with the cable manufacturer's recommendations. In the absence of any such specific recommendations, the Contractor shall use an approved wire cable grip extending not less than 18 inches back from the end of the cable when pulling cable. The clutch on the pulling device shall be set to slip at 50 percent of the weight per 1000 feet of the cable to be pulled or at the manufacturer's maximum force rating, whichever is less. The equipment used for pulling cable shall be equipped with a dynamometer which shall indicate the pulling force in pounds. An approved cable pulling lubricant, as specified in Section 16978, shall be applied to the cable when installing cable in conduit or pipe.

d. Cables shall not cross one another when they are pulled into a conduit or pipe and care shall be taken not to have the conductors pulled tight or

kinked in conduit fittings or boxes. All cables to be installed in a given conduit or pipe shall be pulled and installed simultaneously.

e. Furnish and install potheads and filling compound where cables enter or leave conduit or pipe. The potheads and filling compounds shall be as specified in Section 34 42 78, Miscellaneous Train Control Components and Materials, and shall be applied in conformance with the manufacturer's instructions.

f. Local cable runs from wayside equipment in direct fixation to the trackside junction boxes shall be installed in embedded conduit which has been provided by others. Where embedded conduit is not provided by others for this purpose, the Contractor shall chip and grout the required conduit in place below the structure surface. In doing this work, the Contractor shall not cut any concrete reinforcing bars without the prior written approval of the WMATA Project Manager

4. Installation in Manholes and Pull Chambers

a. Furnish and install clamps or other cable restraining hardware in manholes or other areas where support is needed for cables entering or leaving conduit or pipe or passing through the manhole. Apply an identification tag to each TC cable in every manhole.

b. Sufficient slack shall be provided in each cable so that the bending radius of each cable shall not be less than 20 times the diameter of the cable. Where the specified minimum bending radii of cables do not allow strapping or clamping to channel inserts, the Contractor shall furnish and install approved manhole racks with insulators to support the cables.

c. All mounting and fastening materials used for this application by the Contractor shall be stainless steel, as specified in Section 34 42 15, Basic Equipment Requirements. Use of anodized aluminum channel is unacceptable in manholes and pull chambers.

d. Cables shall be installed in a manner which will prevent their injury by persons and equipment entering and exiting the manholes via ladders or other climbing devices.

e. Install and support cable in manholes and pull chambers in accordance with the approved version of drawings that have been submitted for this work.

5. Special Installation Requirements

a. Provide sufficient slack in all cable installation runs to prevent damage to the cable or its terminations due to expansion or contraction.

b. Provide appropriate special protection for cables in areas where the cables are unavoidably exposed to hazardous conditions such as vibration or sharp corners on equipment. The Contractor shall be responsible for replacing, at no additional cost to the Authority, any cable he has installed which is subsequently damaged as a result of his failure to provide such special protection.

END OF SECTION

SECTION 34 42 53

ATC – TRACK MODULES

PART 1 - GENERAL

1.01 SECTION INCLUDES

A. This Section specifies the furnishing and installation of ATP Track Modules required to perform the following vital functions:
   1. Train detection.
   2. Speed and door command transmission.

1.02 RELATED SECTIONS

A. Related work specified elsewhere shall include, but not be limited to, the following Sections:

1.	Section 34 42 04	Current Automatic Train Control System
2.	Section 34 42 14	ATC Environmental Requirements
3.	Section 34 42 15	Basic ATC Equipment Requirements
4.	Section 34 42 19	ATC System Safety Program
5.	Section 34 42 23	ATC – Speed Command Function
6.	Section 34 42 24	ATC - Microprocessor Systems
7.	Section 34 42 28	ATC - Vital Functions
8.	Section 34 42 49	ATC Signal Wire and Cable
9.	Section 34 42 61	ATC – Audio Frequency Track and Loop Circuit Layouts
10.	Section 34 42 62	ATC – Impedance Bond Layouts
11.	Section 34 42 63	ATC – Power Frequency Track Circuit Layouts
12.	Section 34 42 71	ATC – Racks and Cable Trays
13.	Section 34 42 81	Basic ATC Test and Inspection Requirements
14.	Section 34 42 88	ATC – Quality Assurance
15.	Section 34 42 92	ATC – Instruction Manuals
16.	Section 34 42 93	ATC – Training Courses

1.03 QUALITY ASSURANCE

A. The Contractor shall comply with the quality requirements described in Section 34 42 88, ATC – Quality Assurance.

1.04 SUBMITTALS

A. The Contractor shall submit the following to the Project Manager for approval prior to purchase or fabrication of ATP Track Modules, and within 90 days of NTP:
   1. Product Data, including complete performance data for each type of track circuit, including as a minimum, complete parts lists, and description identifying that shunting and other performance requirements have been met.
   2. Drawings of the proposed modules including ordering information, mounting details, internal and external wiring details, and mechanical and electrical component descriptions and data.

3. Mechanical and circuit drawings (including printed circuit board details) for each type of ATP Track Module.
4. Complete set of factory test procedures for the ATP Track Modules.
5. Systems Assurance documentation in accordance with Section 34 42 19, ATC System Safety Program.
6. Manuals and Training.
7. Safety Analysis on the Track Circuit.

B. The Contractor shall submit all required factory test reports to the Project Manager for approval prior to shipment of the modules to the work site.

PART 2 - PRODUCTS

2.01 BASIC REQUIREMENTS

A. The Contractor shall provide audio-frequency (AF) based ATP Track Modules with the ability to perform the following:
1. Generate and transmit train detection frequency signals modulated with the speed/door command signals at the selected code rate.
2. Generate and transmit coded speed/ door command signals in accordance with inputs from the Speed Command Selection function (see Section 34 42 23).
3. Receive train detection frequency signals.
4. Drive vital track relays or vital inputs on a processor based system when the proper train detection frequency signals are being received.
5. Allow adjustment of the train detection sensitivity from the receiver end of the module.
6. Allow adjustment of the train detection and coded speed/door command signals from the transmitter end of the module.

B. The ATP Track Module shall allow for a 20-foot preshunt adjustment of the longest track circuit within 75 percent of the limit of the overall adjustment capability of the module.

C. Each ATP Track Module shall be equipped with a transmitter and a receiver, with corresponding vital track logic, capable of performing functions as outlined within this Section.

D. Each ATP Track Module shall be capable of generating the train detection and speed/door command signals at the frequencies and code rates described in 34 42 04 - Current Automatic Train Control System.

E. The ATP Track Module shall be vital, fail-safe, and operate reliably and fulfil the requirements of 34 42 19.

F. The ATP Track Module shall be vitally configured to provide isolation between train detection transmitter and receiver equipment.

G. The ATP Track Module shall be designed and configured such that parasitic oscillation, crosstalk or interference does not permit an unoccupied condition for any track receiver other than the correct receiver for the track signal being transmitted.

H. The ATP Track Module shall not generate spurious emissions, or introduce interference in other subsystems and systems.

I. The ATP Track Module shall be immune to transients and other frequencies that may exist in or near the WMATA system, including frequencies generated by the traction power, and emissions generated by carborne equipment.

J. The ATP Track Module shall operate satisfactorily under all environmental conditions present on the system as defined in Section 34 42 14, ATC Environmental Requirements.

K. The ATP Track Module transmitter modules and receiver modules shall be fed by independent power supplies.

L. The ATP Track Module equipment shall operate from 28 V DC nominal.

M. Any microprocessor based equipment used within the ATP Track Modules shall fulfil the requirements of 34 42 24, ATC - Microprocessor Systems.

N. A Safety Analysis on the Track Circuit must be completed and submitted.

2.02 TRANSMITTER

A. Transmission of coded train detection frequencies and speed commands shall employ the use of the following, but may not be limited to:
   1. Oscillators to generate train detection and speed command frequencies.
   2. Code rate generator.
   3. Power amplifier.
   4. Coupling units.
   5. Isolating transformer.

B. All train detection and speed/door command frequencies shall be generated by independent oscillators. The output frequency generated by these oscillators shall not drift by more than 0.5 percent of nominal.

C. The code rate generator outputs shall not vary from their assigned rates by more than 0.5 percent.

D. The power amplifier shall produce sufficient signal to operate at least two 2000-foot track circuits. The Contractor shall provide a fail-safe mechanism to enable a selection of varying signal strengths. A minimum power level setting of five (5) percent shall be provided for use on minimum length track circuits. If the five percent setting is not sufficiently low for proper operation of certain track circuits, the Contractor shall provide one or more supplementary devices to lower the power level to the extent necessary for proper operation of the track circuit(s) involved. A common code rate generator shall be used to modulate both the train detection and speed/door command signals in a given track circuit.

E. Coupling units shall be capable of transmitting all ATP speed commands and one train detection signal, and shall be capable of receiving one train detection signal.

F. The coupling unit output shall be connected through an isolating transformer, if required, to the impedance bond located at wayside by twisted-pair, copper-wire cable of a suitable conductor size. Shielded cable shall not be used unless approved by the Project Manager. Refer to Section 34 42 49, ATC Signal Wire and Cable for cable data.

G. The signal strength of the transmitter shall be capable of driving the cab level of the longest bond-to-bond track circuit to a maximum of 210 milliamps rail current (signal strength measured with the WMATA Cab Level Adjustment Test Fixture). The required cab level output for each track circuit shall be attainable at no more than 85 percent of the maximum output level of the transmitter.

2.03 RECEIVER

A. The equipment receiving the train detection signal from the track coupling device shall produce a DC voltage of the required polarity and amplitude to drive a biased neutral vital relay or interface to a processor vital input only when the received signal is within the specified range of the nominal frequency and code rate signal tolerance.

B. Signal coding frequencies shall be as follows:
1. 3 Hz ± 2%
2. 4.5 Hz ± 2%
3. 6.83 Hz ± 2%
4. 10.0 Hz ± 2%
5. 15.3 Hz ± 2%
6. 21.5 Hz ± 2%

C. The nominal frequency ranges at 3db down shall be as follows:
1. F1: 2100 Hz ± 20 Hz
2. F2: 2320 Hz ± 20 Hz
3. F3: 2580 Hz ± 20 Hz
4. F4: 2820 Hz ± 20 Hz
5. F5: 3100 Hz ± 20 Hz
6. F6: 3370 Hz ± 20 Hz
7. F7: 3660 Hz ± 20 Hz
8. F8: 3900 Hz ± 20 Hz

D. The frequency tolerances in the preceding paragraph necessitate a filter with a narrow bandwidth. The Contractor shall design the filter to minimize ringing (fill-in) between track frequency pulses. The Contractor shall also design the receiver detection circuitry to minimize the detrimental effect of the residual amount of the ringing that remains. The signal-to-noise ratio shall be greater than ten to one.

E. The connection from the impedance bond or bridging receiver to the coupling unit of the receiving equipment may be through an isolation transformer, if necessitated by equipment design.

2.04 CONFIGURATION

A. The standard ATP Track Module shall contain both train detection transmitting and receiving equipment and speed and door command transmitting equipment. These modules shall also include a hard-wired mechanism which allows personnel within a TCR

to select and implement reduced speed commands. The Contractor may propose alternate means of vitally implementing reduced speed commands for the review and approval of WMATA.

B. Test points and a toggle switch to cause the track relay/vital input to de-energize shall be mounted on the front of each ATP Track Module in such a manner that they are accessible only by removing the front cover of the module.

C. The Contractor may provide "receive only" ATP modules to drive vital track relays/vital inputs upon receipt of train detection signals.

PART 3 - EXECUTION

3.01 INSTALLATION

A. The Contractor shall install all ATP Track Modules in the TCR on equipment racks specified in Section 34 42 71, ATC - Racks and Cable Trays.

B. The Contractor shall install ATP Track Modules in accordance with the AREMA Communications and Signals Manual, Section 8, and with the manufacturer's installation and adjustment procedures.

C. The ATP Track Modules shall be interconnected with associated equipment located in the TCR and on-track which is described elsewhere in the Contract Documents.

3.02 TESTING

A. All ATP Track Modules shall be factory tested in accordance with the factory test procedures as specified in Section 34 42 81, Basic ATC Test and Inspection Requirements and approved by the Project Manager. This shall include type acceptance testing as specified in 34 42 15, Basic ATC Equipment Requirements

B. All ATP Track Modules shall be field tested after installation, both prior to connection of field wayside equipment and after connection of field wayside equipment, as specified in Section 34 42 81, Basic ATC Test and Inspection Requirements and Section 34 42 88, ATC – Quality Assurance.

3.03 MANUALS AND TRAINING

A. The Contractor shall provide WMATA staff with training in the proper operation and maintenance of the ATP Track Modules in accordance with Section 34 42 93, ATC – Training Courses.

B. The Contractor shall provide WMATA with manuals developed in accordance with Section 34 42 92, ATC – Instruction Manuals.

3.04 TRAINING SIMULATOR

A. The Contractor shall furnish a training simulator for the ATP Track Modules if one does not currently exist at WMATA's ATC Training Facility or whose functionality is not

compatible with the existing WMATA Training Facility Simulators as per Section 34 42 93, ATC – Training Courses.

3.05 MEASUREMENT FOR PARTIAL PAYMENTS

A. ATP Track Modules, Slave Modules and Receiver Modules will not be measured separately for partial payments, but will be measured as part of the racks on which they are mounted.

END OF SECTION

SECTION 34 42 62

ATC – IMPEDANCE BOND LAYOUTS

PART 1 - GENERAL

1.01 SECTION INCLUDES

A. This Section includes Specifications for the furnishing and installation of nominal and high current types of impedance bond layouts that are required under this Contract. Requirements in this section pertain to both types of impedance bond layouts unless otherwise specified.

B. Impedance bond layouts shall perform one or more of the following basic functions:
   1. Transmit train detection, speed command, door command, and/or TWC signals into the running rails.
   2. Receive train detection and TWC signals from the running rails.
   3. Carry negative propulsion return current from the running rails to:
      a. track cross-bonding cables via center tap connections on the bonds using nominal current impedance bonds.
      b. substation return connections via center tap connections on the bonds using high current impedance bonds.
   4. Carry negative propulsion return current around insulated joints in the running rails via center-tap connections on the bonds.

1.02 RELATED SECTIONS:

A. Related work specified elsewhere shall include, but not be limited to, the following Sections:

1.	Section 34 42 14	Environmental Requirements
2.	Section 34 42 24	Non-Vital ATO and ATS Processor Systems
3.	Section 34 42 49	Signal Wire and Cable
4.	Section 34 42 61	Audio-Frequency Track and Loop Circuit Layouts
5.	Section 34 42 65	Track Bonding Layouts
6.	Section 34 42 78	Miscellaneous ATC Components and Material
7.	Section 34 42 81	Basic ATC Test and Inspection Requirements

1.03 QUALITY ASSURANCE

A. The Contractor shall comply with the quality requirements described in Section 34 42 88 – Quality Assurance.

B. Factory test each impedance bond for conformance with the requirements of these Specifications. Where an ancillary trackside device is required for the proper operation of the bond, this device shall be factory tested along with the bond and shall be shipped and installed with the same bond after passing the factory test. Record the results of these factory tests on forms previously approved by the designated Project Manager.

C. Conduct installation and operational tests of each impedance bond layout as required by

test procedures previously approved by the Project Manager and record the results of these tests for submittal to the designated Project Manager. The field test procedures shall meet the requirements specified in the Contract Documents.

1.04 SUBMITTALS

A. The Contractor shall submit the following to the Project Manager for approval:
   1. Prior to fabrication or procurement of the impedance bonds and within 90 days of NTP:
      a. Scale drawings of the proposed impedance bonds and any ancillary trackside devices required, to include all mounting details for both direct-fixation and ballasted track mounting.
      b. Schematic circuits and detailed wiring diagrams of the proposed impedance bonds and any ancillary trackside devices required.
      c. Physical and operating characteristics of the proposed impedance bonds and any ancillary trackside devices required.
      d. A factory test procedure for the proposed impedance bonds and ancillary devices.
      e. A detailed listing of the chemical, mechanical and environmental characteristics of the encapsulating, bonding, and corrosion preventive materials to be used in the fabrication of the impedance bonds.
   2. Completed factory test reports of the approved type prior to shipment of the impedance bonds and ancillary devices.
   3. Field test procedures and reports for the impedance bond layouts in accordance with the applicable requirements specified in Section 34 42 81, Basic ATC Test and Inspection Requirements..

PART 2 - PRODUCTS

2.01 IMPEDANCE BOND LAYOUT COMPONENTS

A. Each impedance bond layout shall consist of the following basic components:
   1. An impedance bond of the required type as specified herein and as indicated on the Contract Drawings.
   2. Any ancillary trackside device required
   3. Cables of the required type, number, size and length for rail connections to the impedance bond, and bond center-tap connections where required (by others).
   4. Terminating lugs, compression eye fittings, bolts, nuts and other hardware required to connect the cables to the impedance bond.
   5. terminating lugs and welding lugs required to connect the cables to the running rails and/or as necessary to negative return.

2.02 IMPEDANCE BONDS

A. Each impedance bond shall consist of a center-tapped, single turn track coil (composed of two heavy copper "J" bars) around which the applicable coils for train detection, speed command, and TWC signals are wound. The signal coils and signal coupling devices for external cable connections shall be contained in an epoxy- encapsulated assembly on the track coil. The "J" bars of the impedance bond shall be bonded to the body of the impedance bond. This bonding shall prevent rotation of the "J" bars, and shall prevent moisture and dirt from penetrating between the "J" bars and the body of the bond

B. The exposed portions of the two "J" bars forming the single-turn copper coil shall be thoroughly cleaned, treated and coated at the factory to prevent corrosion. The corrosion preventive coating shall be as approved by the designated Project Manager.

C. The impedance bonds shall be sized such that they can be mounted between the running rails on all types of road-bed construction included under this Contract without any part of the impedance bond extending above the top of rail.

D. Track coil terminal lugs shall be provided to connect the required number of rail connection cables to the ends of the track coil, and center tap terminal lugs shall be provided to connect the required number of 1000 KCMIL cables from the center-tap for negative propulsion return feeders and cross-bonding. The Contractor shall provide all material including the protective lugs for connection to moles installed by others.

E. The bond and associated track circuit shall function properly (i.e. continue to communicate applicable audio frequency signals) with an imbalance of 12 percent in the negative return current in the running rails. The imbalance shall be equivalent to 360 amperes DC passing through the track winding from one rail to the other.

F. The DC resistance of the track coil of the bond shall not exceed 30 micro-ohms.

G. The impedance bonds shall operate in conformance with all specified requirements when subjected to the extremes of environmental conditions described in Section 34 42 14, Environmental Requirements.

2.03 NOMINAL CURRENT IMPEDANCE BONDS

A. The J bars shall have sufficient connecting points to accommodate the required number of cables for each side lead and the center tap as per the Contract drawings.

B. The nominal current impedance bonds shall weigh less than 80 pounds each.

C. The track coil shall be rated for 3,000 amperes DC from each rail to center tap (6,000 amperes total) continuously for no less than 3 hours.

2.04 HIGH CURRENT IMPEDANCE BONDS

A. The J bars shall have sufficient connecting points to accommodate five 1000 KCMIL cables for each side lead and up to ten 1000 KCMIL cables for the center tap. An additional copper plate may be utilized for the cable connections to the center tap.

B. The high current impedance bonds shall weigh less than 100 pounds each.

C. The track coil shall be rated for 8000 amperes from each rail to center tap continuously.

2.05 BOND ANCILLARY DEVICE

A. The size, weight, and environmental requirements for any trackside impedance bond ancillary device shall be the same as for the impedance bond. All components of such a

device shall be appropriate for dependable operation of the unit in the applicable environment.

2.06 BOND CONNECTION CABLES

A. All cables connecting impedance-bond end taps to the rails at a given bond location shall be the same length, as specified in the Negative Return Bonding portion of Section 34 42 65, Track Bonding Layouts.

B. The type and size of cable used for track and center-tap connections shall be as specified in the External Cable portion of Section 34 42 49, ATC Signal Cable and Wire.

C. The number of cables used for track and center-tap connections shall be as specified herein and in the Negative Return Bonding portion of Section 34 42 65, Track Bonding Layouts, and as indicated on the Contract Drawings.

2.07 BOND CONNECTING HARDWARE

A. Compression eye fittings, and other hardware required to make track and center-tap connections shall be as specified in Section 34 42 78, ATC Miscellaneous ATC Components and Material, as shown on the Contract Drawings.

B. Terminals for control cable connection to the impedance bond and any ancillary device required shall be of the pressure-clamp or locking plug connector type, and shall readily accept the appropriate cable specified.

C. Any exposed fastening hardware such as cover bolts and name tag screws shall be stainless steel, brass or monel.

2.08 BOND MOUNTING HARDWARE

A. Bond mounting studs and nuts shall be stainless steel and include mounting brackets and plates.

2.09 BOND HOUSING

A. Bond housing shall be compliant with AREMA Section 8.4.9 C.

PART 3 - EXECUTION

3.01 INSTALLATION

A. Nominal current impedance bond layouts of the required configuration shall be installed at the following specified types of locations as shown on the Contractor's approved double-line track plans:
   1. Boundaries of the audio-frequency (AF) track circuits required by:
      a. Logic codes established by the block design;
      b. Passenger station platforms (both ends);
      c. Automatic routing and train supervisory control considerations, and;

B. High current impedance bond layouts of the required configuration shall be installed at the following specified types of locations as shown on the Contractor's approved double-line track plans:
   1. Negative propulsion return locations near traction power substations (indicated on the Contract Drawings by the letters SSR).
   2. Locations where negative propulsion return crossbonding is required between tracks.
   3. Boundaries of the audio-frequency (AF) track circuits required by:
      a. Interlocking limits and end-of-track locations;
      b. Mainline/Yard negative return propulsion power isolation requirements.

C. Mount the impedance bonds and any required ancillary devices on the track structure in the manner previously approved by the designated Project Manager. All bolted surfaces that are to carry negative return currents, including those on J-bars, T-bars and lugs, shall be polished to a bright finish and a conductive coating (Kopr-Shield Coat or equivalent) applied prior to assembly.

D. Install appropriate protection for any exposed connectors on the impedance bonds to prevent damage from being inflicted by dragging equipment.

E. Rail-To-Bond Connections
   1. Install the electrical connections between all impedance bond side taps and the running rails as per the following (See Section 34 42 65, Track Bonding Layouts, and the Contract Drawings):
      a. Nominal Current Impedance bonds: Unless otherwise specified, two 500 mil cables) shall be used to connect each rail to the impedance bond track winding at all other impedance bonds.
      b. High Current Impedance bonds: At impedance bonds which are used to provide a connection between a substation (or tiebreaker station) negative propulsion return bus and the rails, eight 500 mil cables shall be used to connect each side tap terminal ear of the impedance bond track winding to its adjacent running rail.
   2. One end of each of these cable assemblies shall be bolted to the running rail using a mechanical insert type bushing. The other end of each of these cable assemblies shall be equipped with a welded eye terminal lug and shall be securely bolted to one of the side tap terminal ears on the impedance bond. See Section 34 42 65, Track Bonding Layouts, and the Contract Drawings.
   3. All terminals and electrical connection taps on impedance bonds and negative-return cables shall be thoroughly cleaned immediately before being connected.
   4. Once track connections are installed, the resistance between the impedance bond track winding and the rail, including contact resistance at the impedance bond and at the rail, shall be less than 120 percent of the combined resistance of the installed cable or cables, when measured using the following criteria:
      a. Resistance of 24 inches of conductor containing a connection shall not exceed the resistance of 30 inches of plain conductor.
      b. Tests shall be made by the ammeter, milli-voltmeter or Kelvin Bridge method of low-resistance ohmmeter. Tests shall be made with direct current at a value not exceeding 100 amperes. All test values shall be corrected to 68 degrees F for comparative purposes with tables of cable resistance.

F. Bond Center Tap Connections

1. Install all electrical connections to impedance bond center taps. Where more than two cables must be attached to a single impedance bond center tap, provide a copper adapter plate having one hole for bolting to the bond center tap and four holes for bolting cables or pairs of cables to be connected. This plate shall be rated for twice the current-carrying capacity of the bond track winding. All of the center-tap connection cables at a given location shall be the same length.

G. For cross-bonding purposes, install four cables of the required size in conduit furnished by other disciplines, as indicated on the Contract Drawings. These cables shall be equipped with compression-eye terminal lugs on both ends.

H. For substation return or yard isolation purposes, furnish and install a minimum of eight Class D (127 strand) 1000 kcmil cables between the bond center tap adapter plate ("T" connector) and the appropriate negative propulsion return energy mole furnished by others, all as indicated on the Contract Drawings. Connect all of the substation return cables (by other disciplines) directly to the bond center tap adapter plate in the specified manner.

I. The installed resistance of center-tap connections, including the resistance of all cable end connections and any adapter plates required, shall be less than 120 percent of the combined resistance of the installed cables, when measured using the criteria specified in Part 3.01-D.4, above.

J. After installation all glands shall be securely tightened onto the cables and all unused entry holes shall be sealed with threaded blanking plates to reduce the incidence of failures resulting from an accumulation of brake dust on the terminal block and tuning capacitor.

K. All bonding wires or cables not installed in conduit shall be secured to the ties. All wires and cables installed between the rails shall be routed and secured in a manner that provides maximum protection from dragging equipment and track maintenance equipment.

L. All terminals and electrical connection lugs on impedance bonds and negative return cables shall be thoroughly cleaned immediately before being connected.

3.02 MEASUREMENT FOR PARTIAL PAYMENTS

A. Impedance bond layouts will be measured for partial payments based upon the number and type of such required layouts which are delivered, installed, and accepted.

B. Factors that will be considered before partial payments for impedance bond layouts are made will include, but not be limited to the following:
1. Delivery of the impedance bonds and all required ancillary devices, and approval of the impedance bond Factory Test Reports by the designated Project Manager;
2. Installation of the layouts and Level A partial system acceptance of the location involved, and;
3. Level C partial system acceptance of the location involved.

END OF SECTION

SECTION 34 42 64

ATC – TRACK SWITCH OPERATING LAYOUTS

PART 1 - GENERAL

1.01 SECTION INCLUDES

A. This Section specifies the furnishing and installation of Track Switch Operating Layouts at the various locations indicated on the Contract Drawing track plans.

1.02 RELATED SECTIONS

A. Related work specified elsewhere shall include, but not be limited to, the following Sections:

1.	Section 34 42 49	ATC Signal Cable and Wire
2.	Section 34 42 54	ATC - Switch Machines - Mainline
3.	Section 34 42 72	ATC - Junction Boxes
4.	Section 34 42 73	ATC - Conduit
5.	Section 34 42 81	Basic ATC Test and Inspection Requirements
6.	Section 34 42 82	Preliminary and Interlocking Tests (Level A)
7.	Section 34 42 88	ATC - Quality Assurance

1.03 QUALITY ASSURANCE

A. Quality assurance for Mainline Switch Machines, external signal cable, and junction boxes included in Track Switch Operating Layouts; shall consist of the quality assurance requirements specified for those components in Sections 34 42 54, 34 42 49 and 34 42 72, respectively.

B. Factory inspect all rods, connecting hardware and electrical fittings in accordance with the inspection procedures approved by the designated Project Manager.

C. Upon installation of each Track Switch Operating Layout, conduct a mechanical inspection and perform a circuit breakdown test in conformance with the installation inspection procedures approved by the designated Project Manager. This inspection shall also ensure that the Mainline Switch Machine is electrically isolated from both running rails.

D. The final operating tests and inspections for Track Switch Operating Layouts shall be performed as specified in Section 34 42 82, ATC – Preliminary and Interlocking Tests (Level A).

E. Establish and execute a monthly maintenance schedule per the O&M Manual until such time as the equipment has been accepted by the Authority at the time of SCI.

F. All supplied Switch Layout components and systems are Class A type equipment and shall conform to all environmental requirements as identified in AREMA Communications & Signals Manual, Part 11.5.1. for such equipment.

1.04 SUBMITTALS

A. Submit mechanical and electrical drawings for each type of Track Switch Operating Layout proposed for this Contract. The mechanical drawings shall include keyed material lists complete with part numbers. The drawings to be submitted shall include, but not be limited to:
   1. Overall mechanical layouts showing relative location of major components
   2. Detailed drawings of the various rods, connecting hardware and electrical fittings
   3. Control, operating, indicating and internal heating circuits
   4. Detailed wiring diagrams for the Mainline Switch Machine mechanism and its associated wayside junction box.

B. The Contractor shall not proceed with the manufacture or procurement of this equipment, except at his own risk, before obtaining the designated Project Manager's written approval of the equipment proposed.

C. Submit factory inspection procedures for the various rods, connecting hardware and electrical fittings included in the layout. These procedures shall be in conformance with the requirements of Section 34 42 81, Basic ATC Test and Inspection Requirements.

D. Submit an installation inspection procedure which shall include a mechanical inspection and circuit breakdown test of all field wiring included in the Track Switch Operating Layout. This procedure shall conform to the requirements of Section 34 42 81, Basic ATC Test and Inspection Requirements.

E. Submit the required factory inspection reports prior to shipment of the junction box, electrical fittings, rods and connecting hardware for Track Switch Operating Layouts.

F. Prior to the installation of any track switch operating layout, submit a maintenance procedure which outlines the monthly and any other periodic maintenance which shall be performed by the Contractor until such time as the Authority takes possession of the Train Control System. This procedure shall include maintenance as specified in Section 34 42 54, Mainline Switch Machines, and the applicable O&M Manual.

G. Submit a breakdown test report for each Track Switch Operating Layout installed.

H. Submit a monthly report certifying that monthly maintenance has been performed per the O&M Manual.

1.05 DELIVERY, STORAGE AND HANDLING

A. All unpainted ferrous metal surfaces of Track Switch Operating Layout equipment shall be coated with NO-OX-ID "E" grease, petroleum jelly or an approved equivalent, before the equipment is shipped from point of manufacture. Parts constructed of a non-ferrous material or having a painted finish will not require this protective coating.

PART 2 - PRODUCTS

2.01 MAINLINE SWITCH MACHINE

A. A Mainline Switch Machine shall be provided as part of each Track Switch Operating Layout. See Section 34 42 54.

B. Each Track Switch Operating Layout shall be designed to perform the specified functions for WMATA switch point throws of either 5 inches or 3¾ inches, plus or minus ¼ inch in conformance with applicable parts of AREMA Communications & Signals Manual, Sections 12, 13, and 16.

C. Each Track Switch Operating Layout shall consist of:
   1. A Mainline Switch Machine
   2. All the necessary arrangement of rods, insulators and hardware to connect the Mainline Switch Machine to the switch points for throwing, locking, and detecting purposes, including but not limited to the following separate rods and associated equipment:
      a. Insulated Hinged or Swivel (with integrated ball type Point Detector Lug) Front switch rod to connect switch points to the Lock Connecting rod.
      b. Spring Point Detector Lug (for Hinged Front Rod)
      c. Lock Rod Drop Lug
      d. Point Detector Drop Lug
      e. Insulated Operating (Throw) Rod and Adjusting Basket,
      f. Insulated Lock Connecting Rod,
      g. Insulated Point Detector Connecting Rod,
      h. Throw Bar Coupler.
   3. All the necessary cable, wire, junction boxes, junction box pedestal and electrical fittings required to connect the Mainline Switch Machine electrically to the TCR for operation and indication purposes.
   4. All the necessary arrangement of tie straps and fastening hardware to stabilize the switch ties for reliable operation of the Track Switch Operating Layout for ballasted track installations.
   5. All necessary hardware to secure the Mainline Switch Machine to the switch ties for ballasted installations or to the gauge plate extensions for direct fixation installations.
   6. Two cast metal letters, "N" and "R", at least three inches high, painted white, and affixed to the #0 cross-tie or corresponding direct fixation location to denote the Normal and Reverse open switch point positions.

D. All Track Switch Operating Layouts shall have all similar parts interchangeable insofar as possible and practical.

2.02 RODS

A. No welded components will be allowed. All rods and lugs shall be forged unless otherwise directed in writing by the designated Project Manager.

B. When offsets are required in the rods, the rods shall be offset during manufacture. At least 15 inches of threaded area shall be supplied on each rod to accommodate a wide latitude of operating adjustments.

C. The point detector connecting rod shall be connected to the point lug attached to the near side switch point.

D. The lock connecting rod shall be connected to the Center Lug of the insulated front rod.

E. Insulation shall be provided for the vertical rods (front rod, throw rod, lock rod and gauge rod) to electrically isolate the switch points from one another. Insulation required for the above rods and equipment shall be of the type recommended in Part 8.5.3. of the AREMA Communications & Signals Manual.

F. The rods shall be of appropriate length to provide the specified distance from centerline of track to centerline of Mainline Switch Machine. Any modifications necessary to meet this requirement shall be performed by the Contractor in a manner satisfactory to the Engineer at no additional cost to the Authority (See Section 34 42 54, Mainline Switch Machines).

2.03 JUNCTION BOX

A. Each Track Switch Operating Layout shall include a junction box suitable for terminating the interconnecting wire and cable adjacent to the Mainline Switch Machine.

B. A cast iron, pedestal mounted junction box shall be furnished for layouts to be situated in ballasted construction areas. A NEMA 4X cast metal or 14 gauge stainless steel junction box shall be furnished for use in direct fixation areas, except that a fiberglass junction box shall be furnished for installation on tunnel walls. See Section 34 42 72, ATC – Junction Boxes.

C. A heavy-duty, sunlight resistant, flexible conduit shall be installed between the switch junction box and the Mainline Switch Machine for installation of cable between the junction box and Mainline Switch Machine – See Section 34 42 73, ATC – Conduit.

2.04 PULL BOX AND ELECTRICAL FITTINGS

A. For Direct Fixation layouts where embedded conduit stubs up on the side or end of the switch machine opposite to the entrance opening to the machine, provide a stainless steel pull box and heavy-duty, flexible conduit at no additional cost to the Authority. See Section 34 42 73, ATC – Conduit

B. Each Track Switch Operating Layout shall include all conduit, connectors, terminal blocks and other electrical fittings required for the switch control, operation and indicating wiring between the Mainline Switch Machine and the TCR.

2.05 MISCELLANEOUS HARDWARE

A. Two cast metal letters, "N" and "R", at least three inches high, painted white, and drilled to provide a means of attaching them, shall be furnished to denote the Normal and Reverse positions of the switch points.

B. Furnish all screws, bolts, nuts, washers, pins, cotter keys, shims, plates and other hardware required to connect the rods to the Mainline Switch Machine and to the switch points. In ballasted track areas the Contractor shall also furnish tie straps as shown on the Contract Drawings.

2.06 PAINTING

A. All equipment described in this Section shall be painted in accordance with the recommendations of Part 1.5.10 of the AREMA Communications & Signals Manual. The finish color shall be black.

2.07 EQUIPMENT PROVIDED BY OTHER DISCIPLINES

A. The Number One and Number Two (and any additional required by point length) insulated vertical switch rods of each track switch will be furnished by other disciplines.

B. Two switch ties will be furnished by other disciplines for each Track Switch Operating Layout in ballasted track areas.

C. Two gauge-plate extension saddles will be furnished by other disciplines for each Track Switch Operating Layout in direct fixation track areas.

PART 3 - EXECUTION

3.01 INSTALLATION

A. Track Switch Operating Layouts shall be installed as per approved installation drawings and as shown on the Contract Drawings. The Mainline Switch Machines shall be installed as specified in Section 34 42 54.

B. In ballasted construction areas, the Contractor shall be responsible for any ballast removal required to install the switch operating layouts. Excess ballast shall be spread evenly between ties in the vicinity of the track switch. Likewise, the Contractor shall be responsible for all drilling, dapping, shifting, relocating or replacement of ties that may be necessary to meet the requirements indicated on the approved drawings. Whenever ties are shifted, relocated or replaced, the Contractor shall re-tamp them to a fully stable condition. The Contractor shall be responsible for restoring the track to proper alignment and profile at no additional cost to the Authority.

C. In direct fixation construction areas, the Contractor shall be responsible for mounting the Mainline Switch Machines at the proper location and height on the gauge plate extension saddles furnished by others. All fixed and moving parts of the functional Track Switch Operating Layout shall be within 3 feet 10½ inches from the gauge line (within 6 feet 2¾ inches of the centerline) of the track.

3.02 IDENTIFICATION

A. The two cast metal letters "N" and "R" shall be securely mounted inside the running rails, attached to the first tie adjacent to, but not supporting, the switch points (or in a similar position on the concrete in direct fixation areas) to denote the Normal and Reverse positions of the switch points. The letter "N" shall be mounted on the normally open point side as shown on the Contract Drawings.

3.03 LUBRICATION

A. Lubricate all moving parts and bearing points of the switch machine upon switch machine installation, with lubricants approved by the designated Project Manager. Any moving parts of the switch layout which are frozen shall be freed prior to being lubricated.

B. Upon installation of the layout, grease the various rod fittings, thoroughly clean, and apply an Authority approved graphite lubricant to the tie plates under the switch points, base of inside stock rail and to the inside of the joint bars holding the heels of the switch-point rails. Rusted plates shall be wire brushed to remove any scale prior to being lubricated.

C. Apply a coating of NO-OX-ID "E" grease, or approved equivalent, to exposed threaded surfaces to prevent corrosion.

3.04 ADJUSTMENT

A. Adjust the switch point opening (Vertical Rods) of an unguarded switch to 5 inches, ± ¼ inch from the stock rail as measured at the #1 rod. For guarded-point switches, the point opening shall be 3¾ inches, ± ¼ inch.

B. Basket adjustment shall result in a complete "tuck" of the point rail under the machined portion of the stock rail with sufficient point pressure and point-to-stock rail contact when the switch is locked.

C. Adjust the lock rods in such a manner that the Mainline Switch Machine cannot mechanically lock when both switch points are 1/4 inch or more from their respective stock rails. Obstruction placement is made 6 inches back from the switch points.

D. Adjust the point detector rods and Mainline Switch Machine in such a manner that the proper indication contacts:
   1. Indicate switch closure when the switch is mechanically locked.
   2. Are not closed when the switch is mechanically locked and the switch points are 1/4 inch or more from their respective stock rails.

   Point detection test is made using the manufacturer's specified test tool.

E. These adjustments shall be maintained by the Contractor from the time of installation until acceptance by the Authority. All of these adjustments shall be verified (and corrected if necessary) by the Contractor, not more than 30 days prior to acceptance by the Authority.

3.05 MAINTENANCE

A. Track Switch Operating Layouts shall be properly lubricated, adjusted, and maintained by the Contractor on a regular timed basis until use and possession of the switches is taken by Authority Rail Systems Maintenance at the time of acceptance by the Authority. The Authority will assume responsibility for switch adjustment and maintenance at that time.

3.06 MEASUREMENT FOR PARTIAL PAYMENTS

A. Track Switch Operating Layouts will be measured for partial payments as units, based upon the number of complete sets of properly inspected layout components delivered, installed, and properly adjusted by the Contractor, and accepted by the Authority.

B. For measurement purposes for partial payments, the Mainline Switch Machines will not be considered to be included in the switch operating layouts, but will be measured separately.

END OF SECTION

SECTION 34 42 65

ATC – TRACK BONDING LAYOUTS

PART 1 - GENERAL

1.01 SECTION INCLUDES

A. This Section specifies:
1. The furnishing and installation of all negative return bonding required to complete the negative propulsion return system.
2. The furnishing and installation of "signal rail" joint, switch jumper, and transposition bonding for power frequency track circuits.

1.02 RELATED SECTIONS

A. Related work specified elsewhere shall include, but not be limited to, the following Sections:

1.	Section 34 42 17	Basic Interlocking Requirements
2.	Section 34 42 49	ATC Signal Wire and Cable
3.	Section 34 42 62	ATC – Impedance Bond Layouts
4.	Section 34 42 63	ATC - Power Frequency Track Circuit Layouts
5.	Section 34 42 78	ATC – Miscellaneous Components and Materials
6.	Section 34 42 81	Basic ATC Test and Inspection Requirements
7.	Section 34 42 88	ATC – Quality Assurance

1.03 SIGNAL RAIL BONDING

A. All signal rail within the limits of power frequency track circuits that is to be provided under this Contract shall be properly bonded in order to provide the greatest degree of broken-rail protection and shunt detection practicable. This bonding shall meet the following criteria:
1. Provide all signal rail bonding necessary to provide a series path for the track circuit current through the greatest length of signal rail practicable.
2. Do not bond around frogs in the signal rail, but provide signal rail bonding to the ends of the frog castings where necessary, or to frog-flangeway/signal-rails which are continuous through the frog.
3. Provide signal rail bonds between the extremities of the two legs of the track circuit signal rail which extend to insulated joints beyond each signal frog of a diamond crossover.
4. Provide all signal rail bonds and transpositions necessary, whether specifically shown on the typical Contract Drawings or not, to produce a single, continuously bonded, maximum-length path through the signal rail and around all bolted or "glued" non-insulated joints in the signal rail.
5. Where restraining rail is used in conjunction with a signal running rail, bond each end of each individual rail segment of restraining rail to its associated running rail.

B. Typical signal-rail bonding details are shown on ATC Standard Drawings ST-ATC-IEQ-008, ST-ATC-IEQ-009 and ST-ATC-IEQ-010. Signal rail bonding connections shall be made as close to the rail joints as practicable to ensure maximum broken rail detection.

1.04 NEGATIVE RETURN BONDING

A. Negative Return Bonding is required as follows:
1. To ensure sufficient rail bonds in each propulsion return rail;
2. To minimize the effect of negative propulsion current on the track circuit equipment;
3. Around all negative-return-rail bolted or "glued," non-insulated rail joints in special trackwork areas;
4. To and around trackwork frogs in the negative-return rail, and to isolated pieces of running rail in the frog assemblies;
5. To the heels of negative-return-rail track switch points if required;
6. As a signal transposition and current-equalizing bond between the stock rails of the diverging tracks at individual main line turnouts using audio frequency track circuits;
7. As a transposition bond in the middle of single crossovers using power frequency track circuits and wherever else the location of negative-return rails must be transposed;
8. As cross bonding between parallel main line track impedance bonds, and between through-track and diverging-track impedance bonds at junction switches;
9. Between impedance bonds and running rails;
10. Between track-mounted negative return device (mole) (usually by others) and impedance bond center tap at substation locations and yard isolation locations;
11. From both ends of segments of restraining rail to their associated running rail;
12. In Audio Frequency Track Circuit territory, from segments of restraining rail to their associated running rail at locations where impedance bonds are connected to the running rails.
13. Around all extraneous or abandoned insulated joints in negative-return running rails, whether these joints are indicated on the Contract Drawings or the trackwork drawings or not;
14. Between the two closure rails of each turnout adjacent to the turnout frog, and;
15. At such other locations as necessary to provide an electrically bonded path of adequate capacity for the negative propulsion current around non-insulated, bolted connections in the negative return running rails.

B. Typical negative return bonding details are shown on ATC Standard Drawings ST-ATC-IEQ-011 and ST-ATC-I-012.

1.05 TRACTION RETURN RESISTANCE

A. Track circuits furnished and installed for WMATA shall provide an unbroken, low-resistance path for traction current to flow from the train to the substation, while maintaining the boundaries, definition and shunting sensitivity of the track circuits.

B. The designer of record shall provide a detailed calculation of the resistance between each traction power substation throughout the entire territory affected by

the project. The traction return circuit, which includes the rails, impedance bonds, and negative return bonds shall have a resistance that does not exceed the value calculated by the designer of record.

C. The traction return system resistance shall be coordinated with the requirements of DC Traction protective circuit breaker settings.

1.06 TRACTION RETURN IMBALANCE

A. The Contractor shall work directly with WMATA to design a traction return system that minimizes traction return imbalance.

B. The Contractor shall at a minimum account for in the traction return system design the following factors that influence traction imbalance
   1. Magnitude and balance of DC propulsion flowing through the impedance bond;
   2. Rail resistance;
   3. Temperature variations;
   4. Direction of current flow through the impedance bond, and;
   5. Air gap of the impedance bond magnetic core.

C. The Contractor shall propose a design that seeks to minimize traction return imbalance and that design shall include the following considerations:
   1. Verification that both rails are equally isolated from earth. Eliminate grounded rails caused by contact with structures and other elements that create unintended grounds;
   2. Minimization of ballast contact with the running rails, especially where fresh ballast has been distributed over one rail only;
   3. Minimization of the impact of salting of station platforms, which may have the ability to reduce ballast resistance of near-side rail;
   4. Elimination of shorted IJs;
   5. Elimination of defective rail joint bonds and bonding connections;
   6. Removal of unauthorized electrical connections to running rails;
   7. Coordination of snowmelter electric heater return connections;
   8. Equalization of DC rail resistance by minimizing stagger between IJ's;
   9. Verification that Impedance bond side leads are of the exact same composition, length and resistance where a cross bond or substation return connection is made to the center tap;
   10. Adjustment of impedance bond side lead length to equalize rail resistance;
   11. Installation of transpositions to equalize rail resistance;
   12. Adjustment of resistance to PF track circuits to lessen DC current flow through track circuit apparatus, and;
   13. Correction of poor shunting conditions which cause imbalance in occupied track circuits.

D. Traction return imbalance is known to create faulty operation of audio frequency track circuits as the magnetic field created by current circulating through the single turn winding of the impedance bond can saturate the tuned magnetic circuits rendering them ineffective. Balanced currents, equal but in opposite direction, in each leg of the single turn winding result in canceling magnetic fields. . The traction

return design shall take this into account and shall minimize instances of traction return imbalance.

E. AF impedance bonds typically offer 30-50 micro-ohms rail-to-rail resistance. Propulsion current carrying capacity of typical AF impedance bonds is rated at 2000, 3000 or 4000 amps/rail.

1.07 QUALITY ASSURANCE – NEGATIVE RETURN BONDING

A. Upon completion of the installation of Negative Return Bonding at each location, the Contractor shall conduct field inspections of the installation in accordance with pre-approved procedures and furnish documentation of the inspection results, all as specified in Section 34 42 81, Basic ATC Test and Inspection Requirements.

B. The Contractor shall test each bolted bond in accordance with the requirements of Section 34 42 81, Basic ATC Test and Inspection Requirements and Section 34 42 88, ATC – Quality Assurance.

1.08 QUALITY ASSURANCE – SIGNAL RAIL BONDING

A. Upon completion of the Signal Rail Bonding installation at each location, the Contractor shall conduct field inspections of the installation in accordance with pre-approved procedures and furnish documentation of the inspection results, all as specified in Section 34 42 81, Basic ATC Test and Inspection Requirements.

B. The Contractor shall demonstrate that the signal rail bonding is in accordance with the requirements specified herein, as shown on the approved installation drawings, and as recommended in Part 8.1.20 of the AREMA Signal Manual.

1.09 SUBMITTALS

A. The Contractor shall prepare and submit detailed installation drawings showing the configuration of negative return bonding for each type of layout encountered. Wherever special, non-standard layout conditions exist, a drawing shall be submitted for each special condition. A list of materials with ordering reference numbers shall be included with each of the submitted drawings.

B. The Contractor shall submit documentation of resistance tests performed, in compliance with Section 34 42 81 and Section 34 42 88, to the Project Manager within ten days of performance of the required tests.

C. The Contractor shall prepare and submit detailed installation drawings showing the configuration of signal rail bonding for each type of layout encountered. Wherever special, non-standard layout conditions exist, a drawing shall be submitted for each special condition. A list of materials with ordering reference numbers shall be included with each of the submitted drawings.

D. The Contractor shall submit samples and data for at least two types of protector clips for restraining signal rail joint bonds.

PART 2 - PRODUCTS

2.01 NEGATIVE-RETURN-RAIL JOINT BONDS

A. Negative-return-rail joint bonds shall be fabricated for bolting to the web of the rails using mechanical insert bushings. Negative return cables shall consist of 500 kcmil size, insulated, ropelay cable, with approved single ½" hole, flex type terminal lugs on each end, two for each location; except only one for switch point rail heels. The exact length of the cable shall be sufficient to span the joint bar without excess slack but also not block access to the joint bar hardware.

B. The cable shall meet the requirements of Section 34 42 49.

C. The mechanical insert assemblies shall adhere to the recommendations in part 8.1.35 of the AREMA Communications and Signals Manual.

2.02 500KCMIL CABLE BONDS

A. Each negative return bond used for impedance bond- to-running-rail bonding, or switch bonding (to include running-rail-transposition bonding at single switches), shall consist of a dual 500 kcmil cable assembly which meets the requirements of Section 34 42 49,and shall bolt to the rail using mechanical insert bushings, unless otherwise specified herein.

2.03 CABLE TERMINATION LUGS

A. Lug type terminal fittings shall be used to attach cable to impedance bonds, mechanical bushing inserts, and certain other terminating devices. The lug shall be made of drop-forged copper and formed for compression onto the strands of the cable in accordance with approved methods used by manufacturers experienced in this class of manufacture. Lugs shall be of soft ductile copper, for bolting onto the ears of the impedance bonds or other terminating devices without cracking. Care shall be taken in compressing terminals to strands so as not to reduce the cross section of the conductor or to injure any of the individual strands. Auxiliary sleeves of the terminal shall be so arranged as not to pinch the wires entering the sleeves. Samples of the terminals shall be submitted for the approval of the Project Engineer before installation.

B. Cables may also be pre-assembled using exothermically welded lug ends as approved by the Project Engineer.

2.04 "T" CONNECTORS

A. Copper adapter plates ("T" connectors) for multiple-cable connections to impedance bond center taps shall be from 3/4-inch copper bus bar stock of 98

percent conductivity with a minimum cross sectional area equal to that of the impedance bond to which it is connected.

2.05 MISCELLANEOUS NEGATIVE RETURN BONDING HARDWARE

A. Bolts, nuts and washers used to connect lugged cable assemblies to the end and center taps of impedance bonds and to "T" connectors, shall be made of Naval Bronze or Silicon Bronze.

B. Fasteners for mechanical insert -bolted bond connections shall be 1/2-inch diameter bolts with self-locking nuts and all washers included in the manufacturers' hardware kits. They shall comply with the recommendations of part 8.1.35 of the AREMA Communications and Signals Manual.

2.06 SIGNAL RAIL JOINT BONDS

A. Non-insulated signal rail joint bonds shall be galvanized steel and copper composite commercial plug bonds as manufactured by Erico Type SBPAJB48 or an approved equal, .

B. Insulated signal rail joint bonds may be either commercial plug bonds as manufactured by Erico or may be assembled by the Contractor and shall consist of two plug bond track connectors and the required length of insulated cable. The track connectors and cable shall be as close as practicable to the same size/gauge and composition as the non-insulated signal rail joint bonds.

C. Mechanical insert assemblies with #6 lugged wire such as manufactured by Cembre or an approved equal are also acceptable.

D. Signal bond wires shall be as recommended in Part 8.1.25 of the AREMA Signal Manual except as otherwise specified herein.

PART 3 - EXECUTION

3.01 INSTALLATION OF NEGATIVE RETURN BONDING

A. All procedures; such as drilling, deburring, grinding, sanding, cleaning, cable stripping, and crimping shall be performed according to best practice and shall follow manufacturer's instructions. All connections, whether terminal lugs, rail bushings or other shall be installed as per manufacturer's instructions. All work shall be done in such a way as to prevent introduction of defects such as stress risers and micro-cracks into the rail. Torque fittings shall be installed as recommended by the manufacturer using a calibrated torque wrench to ensure the necessary mechanical and electrical connection.

B. Negative return bond cables shall be connected to the J-bar end and center taps of impedance bonds as specified in Section 34 42 62, ATC – Impedance Bond Layouts, but only after certain specified tests (Section 34 42 81) have been made. Each negative return bond shall be installed with a sufficient amount of slack to accommodate rail movement due to expansion and contraction, as well as to allow access to track hardware.

C. Unless otherwise specified, one dual-500 kcmil bond shall be installed between each impedance bond J-bar end and its adjacent running rail. The side lead cables for the two sides of each individual impedance bond shall always be of the same size and type and shall be of equal length.

D. At substation return locations and yard isolation locations 8 dual-500 kcmil side leads shall be installed between the impedance bond and each running rail. All of these bonds shall be of the same size and type and shall be of equal length.

E. Install a minimum of eight 1000 kcmil negative-return bond cables of appropriate length between each substation negative-propulsion-return junction device and a center-tap "T" connector on its adjacent impedance bond. The Contractor shall provide and install all necessary connectors, lugs, cables and hardware to make the installation complete between each impedance bond and its appropriate junction device for each return to the substation. The length of each substation negative-return connection shall be kept to the minimum required to reach between the two points without undue strain.

F. No cross bond shall be provided at a substation return location.

G. Four 1000 kcmil negative-return bonds (cables) shall be installed in parallel at each cross bond location between main line parallel tracks

H. Provide negative-return bonding around all non-insulated negative-return rail joints and around all extraneous or abandoned insulated joints. Two 500 kcmil insulated cables with mechanical insert bushing rail web bonds (one on each side of the web of the rail) shall be used for this purpose wherever possible. These bonds shall be properly bolted to the neutral axis of the web of the rails. The installation of these bonds shall comply with part 8.1.36 of the AREMA Communications and Signals manual.

I. Should conditions be encountered where it is not practicable to install mechanical insert bolted bonds, alternate bond connections may be submitted to the Project Engineer for review and approval.

J. Install all negative return rail joint bonds, rail transposition bonds, switch, frog, and cross bonds as specified herein. Joint bonds shall be installed as close to the ends of the rail joint bars as possible in order to maximize broken rail detection. All 500 kcmil rail bonds shall be bolted to the rail using the mechanical insert bushing type at the neutral axis of the web of the rail.

K. Where rail-web bolted bonds are to be applied, the rail brand shall be ground off with a vitrified grinding wheel. After grinding, rails shall be cleaned with an approved, non-toxic solvent, to remove all traces of grease and dirt. The applicator brush shall be kept free of dirt and debris during cleaning operations.

L. Mechanical insert bolted rail web bonds shall be installed as per the manufacturers' instructions, using the recommended equipment to attach properly sized terminating devices to the neutral axis of the web of the rail.

M. Where impedance bond locations do not align properly with substation return layouts; the Contractor shall adjust the bond layout(s) or provide additional equipment and cable as necessary to accomplish the required substation return connections per an approved Project Engineer submittal at no additional cost to the Authority.

3.02 INSTALLATION OF SIGNAL RAIL BONDING

A. Install all signal rail joint bonds, jumpers and transposition bonds as specified herein, per part 8.6.25 of the AREMA Communications and Signal Manual, in accordance with the manufacturer's instructions, and as shown on the detailed installation drawings submitted by the Contractor and approved by the designated Project Engineer.

B. For all signal rail bonding, no hole shall be drilled through the rail brand unless the brand is first ground off with a vitrified grinding wheel. Holes shall be drilled perpendicular to the rail by an approved rail drilling machine at the neutral axis of the rail. Holes shall be a maximum of three-eighths inch in diameter. All holes shall be cleaned and deburred before the bonds are installed. Bond wires shall be installed the same day as the hole is drilled. In the event bond wires cannot be installed the same day, the bond hole shall be protected with a suitable plug for protection against the elements. Plugs shall be driven with a hammer approximately three pounds in weight and when in place shall be tight to provide the best possible contact with the drilled surface in the web of the rail. The bond pin shall not be driven to the pin's shoulder. Where a pin is driven to the shoulder, a new hole shall be drilled and a new bond shall be provided. After the bond pin has been driven, a coating of No-Oxid corrosion inhibitor shall be applied to the surface of the bond where it contacts the rail.

C. It shall be the Contractor's responsibility to ensure that signal bonding for each given track circuit does not cause the signal rail to become grounded or to contact some extraneous energy source or the signal rail of another track circuit. Where such a possibility exists, the Contractor shall use insulated signal bonds, or shall take such other approved action as may be necessary to prevent such contact, at no additional cost to the Authority.

D. Any signal bond which is found to be defective shall be removed and a new bond shall be installed at no additional cost to the Authority.

E. Signal rail joint bonds shall be held in place by a protective rail clip (Erico A251 or equivalent) of a type which has been approved by the designated Project Engineer.

F. Signal rail joint bond cable shall be secured to the cross ties and base of rail from the conduit stub up or track circuit bootleg using approved attachment assemblies in order to minimize excess cable slack. All attachment assemblies shall be sunlight resistant and shall be approved by the designated Project Engineer.

3.03 MEASUREMENT FOR TRACK BONDING PARTIAL PAYMENTS

A. For measurement purposes only, negative return bonding and signal rail bonding will include all electrical fittings, bonds, and cable used for this purpose, and all labor and miscellaneous material and equipment required to make the required connections as specified.

3.04 PARTIAL PAYMENTS

A. Factors which will be considered when measuring track bonding for partial payments will include:
   1. The proportional amounts of the required types of bonding which has been properly installed and accepted.
   2. Proper installation of negative return bonding for all extraneous unbonded or improperly bonded rail joints, if any.

END OF SECTION

SECTION 34 42 68

ATC – LED SIGNAL LAYOUTS

PART 1 - GENERAL

1.01 SECTION INCLUDES

A. This Section specifies the design, furnishing, installation, documentation and testing requirements necessary for LED signal assemblies and layouts at the various locations indicated on the Contract Drawings, and the final design by the Contractor of modifications to standard signal layouts where necessary.

1.02 RELATED SECTIONS

A. Related work specified elsewhere shall include, but not be limited to, the following Sections:

1.	Section 34 42 14	Environmental Requirements
2.	Section 34 42 15	Basic ATC Equipment Requirements
3.	Section 34 42 16	Basic ATC Circuit Requirements
4.	Section 34 42 47	ATC Ground Detectors
5.	Section 34 42 49	Signal Wire and Cable
6.	Section 34 42 72	Junction Boxes
7.	Section 34 42 74	Locks and Keys
8.	Section 34 42 75	Foundations
9.	Section 34 42 78	Miscellaneous Train Control Components and Materials
10.	Section 34 42 81	Basic ATC Test and Inspection Requirements
11.	Section 34 42 88	Quality Assurance
12.	Section 34 42 92	ATC Instruction Manuals

1.03 QUALITY ASSURANCE

A. The Contractor shall comply with the quality requirements described in Section 34 42 88 – Quality Assurance.

B. The Contractor shall inspect each signal unit prior to shipment. This inspection shall conform to the Contractor's Factory Inspection Procedure as approved by the Project Manager. Signal units shall be in compliance with the Specifications prior to delivery to the Authority.

1.04 SUBMITTALS

A. The Contractor shall submit the following to the Project Manager for approval:
1. Complete drawings for each type of signal unit and each proposed type of signal layout, including all mounting and wiring details. A key-numbered parts list and complete material ordering reference numbers shall be included for each type of signal and layout.
2. Complete documentation for each signal layout which has to be modified to overcome potential sighting or interference problems. This documentation shall include an explanation of how the problem is eliminated by the proposed modifications.
3. Factory Test and Inspection Procedures for checking complete signal units.
4. Installation Inspection Procedure for checking the installation of signal layouts.

5. Factory test reports for the signals for approval prior to shipment of signals to the job site.
6. Field Operating Test Procedures and Test Reports to determine the acceptability of each complete signal layout.
7. Operation and maintenance manuals in accordance with Section 34 42 92, ATC – Instruction Manuals, with comprehensive descriptions and illustrations of products including configuration, part numbers, and other pertinent purchasing information.

PART 2 - PRODUCTS

2.01 BASIC REQUIREMENTS

A. Each Signal Layout shall consist of:
1. Colored LED signal units.
2. LED unit compartments and receptacles.
3. All required mounting devices and related hardware.
4. All electrical fittings and cable required to provide the specified signal control and/or lighting circuitry for the wayside LED signal units.

B. Two basic types of Signals shall be used:
1. Controlled Signals (Three LED units - R/LW/R).
2. Marker Signals (Two LED units - R/R) (End of Track locations).

C. Controlled signals shall be used to govern the movement of trains:
1. Through interlocking plants (Interlocking Signals) (or as "Repeater Signals" for Interlocking Signals where sighting problems or other special situations are encountered.).
2. For entrance to segments of "running tracks" between interlockings (Intermediate Signals), or;
3. From tail track storage areas (Holdout Signals).

D. All signals of a given type shall be identical, unless otherwise specified.

E. Marker signals shall be used to present a permanent "RED" aspect at end-of-track locations.

F. Based upon the Contract Documents and on-site inspection, the Contractor shall determine, for every required signal location, if there is a potential sighting, clearance or interference problem for signals installed in the normally specified manner. For every signal location where such a potential problem exists, the Contractor shall design and submit thorough documentation for any alterations and/or additions to the normal installation layout which are necessary to overcome the potential problem.

2.02 SIGNAL UNITS

A. The Contractor shall provide all new LED signal units.

B. Each LED signal unit shall consist of the following components, all as described herein and as shown on the Contract Drawings:
1. Housing.
2. Lenses if necessary.
3. LED units, LED compartments and LED unit receptacles.

4. Any and all necessary arrangement to achieve the desired short range and long range viewing requirements.
5. Terminal boards and wiring.
6. Number plate.
7. Mounting device.
8. Lens hoods - where required.
9. Mast and base or wall mounting bracket, as applicable.
10. Ladder or pole steps, as applicable
    Note - All pole steps shall include a junction box base.

C. Signal units shall be similar in size and weight to the signals presently installed on the METRORAIL system. The Contractor shall submit the proposed LED signal unit in writing for approval by the Project Manager. Approval of the LED signal unit will be based upon:
1. Submittal of proof of the ability of the unit to meet the requirements specified in this Section;
2. Proof by submittal or demonstration that no false indication may occur in any LED unit/display when connected to power or an approved ground detection system as described in Section 34 42 47 – ATC Ground Detectors.
3. Such additional evidence and tests as the Project Manager may require to be provided or conducted, all at no additional cost to the Authority.
4. Successful completion of Type Acceptance Testing as described in Section 34 42 14, ATC Environmental Requirements and Section 34 42 81, Basic ATC Test and Inspection Requirements and Contract ATC Program Criteria.

D. LED units shall not contain line to ground MOVs.

E. LED Signal units shall conform to AREMA Signals Manual, Part 7.1.5, except as otherwise specified herein.

2.03 HOUSINGS

A. The housing for Controlled and Marker Signals shall be made of cast iron and shall have three LED unit compartments. The LED unit compartments shall be separated from each other by partitions which shall allow the necessary wiring to pass between compartments, but which shall prevent the passage of light between the compartments.

B. Each LED unit compartment shall be of adequate size to provide ample space for the LED unit, LED unit receptacles, terminal blocks and other necessary apparatus. The inside of each LED compartment shall be painted to the manufacturer's standard.

C. Each signal housing shall have a cast iron, hinged, removable door. The hinge pins shall be made of brass or stainless steel. This door shall be equipped with a gasket as recommended in Part 15.2.10 of the AREMA Signal Manual. The door shall also be provided with two ventilating openings, top and bottom, which shall be covered with fine mesh stainless steel, copper or brass screen on the inside and protected with hoods to keep precipitation out. A stop shall be provided to prevent the door from opening to an angle greater than one hundred degrees. Facility shall be provided for locking the door with a standard WMATA padlock as specified in Section 34 42 74, Locks and Keys. Each door shall be provided with a latching arrangement of such design that the door cannot be latched or locked until it is fully closed.

2.04 LENSES AND HOODS

A. Signal lenses shall be of the doublet type, 6-3/8 inches in diameter, mounted in gasket material and secured to the LED unit compartments in such a manner that their removal will not affect the adjustments of the LED unit receptacles. The lenses for these signals shall meet all applicable recommendations of Part 7.1.10 of the AREMA Signal Manual which do not conflict with the requirements of these Specifications.

B. Controlled signals shall have three LED units, while Marker Signals shall have only two. For standard, three-LED unit Controlled Signals, red LED units shall be installed on the top and bottom LED unit compartments and the middle LED unit shall be lunar white. For Marker Signals, the top and bottom LED units shall be red and blank plate shall be installed in place of middle LED unit.

C. All signals shall have a nine-inch-long sheet metal hood of copper-bearing steel mounted to shield each lens of all signals.

D. No backgrounds shall be furnished.

E. Provide special lenses and other devices as necessary to prevent phantom aspects and to meet the requirements specified above.

2.05 LED ASPECTS AND RECEPTACLES

A. LED units shall be mounted in receptacles behind each lens.

B. The LED unit receptacles shall be so designed and located that proper relation of LED units to lenses can be readily made and maintained. Receptacles shall be designed so that they will prevent the LED units from coming loose because of vibration.

2.06 NUMBER PLATES

A. Each Controlled Signal and Marker Signal shall be equipped with a sheet steel number plate as shown on the Contract Drawings. These number plates shall have white reflex-reflecting lettering on a black synthetic enamel background.

B. The number plate for each Controlled Signal shall have two lines of 2-inch high lettering. The top line shall be the route initial and location designation number, and the bottom line shall be the signal number.

C. The number plates for Marker Signals shall be similar to those for Controlled Signals except that they shall have a white letter "X" followed by the two-digit track number in place of the lettering specified for the bottom line of Controlled Signal number plates.

D. Number plates shall meet the applicable recommendations established by Part 14.6.1 of the AREMA Signal Manual, where the recommendations of the AREMA Signal Manual do not conflict with the requirements established in this Section.

2.07 MOUNTING DEVICES

A. Each signal head shall be equipped with a mounting device suitable for the method of mounting required for the particular signal. An adjusting mechanism for aligning the signal shall be included in this device.

2.08 MAST AND BASE

A. The mast for each mast-mounted signal shall consist of an approved pipe pole four inches in diameter supported by an approved split cast-iron base of the appropriate type (with a junction box) as shown on the Contract Drawings.

B. A suitable adapter shall be provided when the four-inch pole is used to support a signal sized for a three-inch pole. As an option, the mast for each mast-mounted signal shall consist of an approved pipe pole three inches in diameter supported by an approved split cast iron base.

C. The mast shall be of suitable length to support the signal head at the height required by its approved layout design.

D. For installation in ballasted-track areas, the cast-iron base shall be of the junction box type. The junction box base shall be equipped with at least six pairs of AAR terminals for the signal wiring. The AAR terminals shall be accessible by a cover or door, equipped with provisions for padlocking. Opening this cover or door shall not require the removal of any other part of the signal assembly.

E. Each type of base shall have four mounting holes suitable for 3/4-inch diameter foundation bolts arranged on 9-1/2 by 9-1/2 inch centers.

F. Wherever a non-junction-box base is used, or the signal is wall mounted, the Contractor shall provide a separate junction box for installation in close proximity to the signal at no additional cost to the Authority. This junction box shall be equipped with at least six pairs of AAR terminals for the signal LED units.

G. The junction box shall be as specified in Section 34 42 72, Junction Boxes.

H. Platform-Mounted Signals
   1. A leveling plate and a No. 60 Duro Neoprene pad, or approved equal, shall be furnished and installed beneath the base of each platform-mounted signal. The Contractor shall furnish and install 4 1-inch galvanized bolts and star masonry anchors, or approved equal, to secure the signal base to the platform.

2.09 LADDER OR STEPS

A. The Contractor shall ensure that the installation or maintenance of the complete signal assembly complies with all Health and Safety Requirements for WMATA maintenance personnel working at heights.

B. All prefabricated ladders shall be furnished complete with all stays, fastenings, bolts, strap-iron extensions, where required, and any other necessary mounting and fastening equipment. Side rails of ladders shall not be factory bent or drilled at the bottom but shall be furnished straight so that they can be bent and drilled in the field for best accommodation to local conditions.

C. Ladders with a series of punched holes in the side rails will not be acceptable.

D. Sloping ladders for mast-mounted signals shall be furnished complete with top and intermediate stays.

E. Pole steps may be furnished in lieu of ladders for mast-mounted signals. When pole steps are used, they shall be of the double-sided type, mounted as follows:
   1. The top step shall not be lower than 5 feet below the top of the signal.
   2. The bottom step shall be 1 foot above the pole base.
   3. The maximum distance between steps shall not exceed 12 inches.
   4. Steps shall be uniformly spaced.

2.10 WIRING

A. Signal units shall be internally wired at the factory insofar as practical and possible.

B. Signal layout wiring shall conform to the requirements of Section 34 42 49, Signal Wire and Cable, and Section 34 42 15, Basic Equipment Requirements, and shall be located as indicated on the Contract Drawings.

2.11 PAINTING

A. The metal components of each signal layout shall be painted in accordance with the recommendations of Part 2.4.30 of the AREMA Signal Manual. The finish coat of paint shall be dull black.

PART 3 - EXECUTION

3.01 DELIVERY, STORAGE AND HANDLING

A. Signal LED units shall be shipped separately from the signals as necessary to avoid damage

3.02 INSTALLATION

A. Signal Layouts shall be installed as per approved drawings and as shown on the Contract Drawings. No part, either fixed or movable, of any signal layout shall project into the clearance envelope for the transit vehicles. This shall include, but not be limited to, the opened covers or doors of the signal housing and signal junction box.

B. The signal number plate shall be placed under the lowest signal lens in the assembly, bracket-mounted to the signal housing, and shall be fastened by four brass screws, with lead and brass washers under the screw heads and under the enameled plate. The lead washers shall be installed adjacent to the enamel.

C. The base for each mast-mounted signal shall be attached to the concrete invert or to a concrete foundation by means of anchor bolts cast into the concrete. See Section 34 42 78, Miscellaneous Train Control Components and Material, and Section 34 42 75, Foundations.

D. Wall mounted signals shall be bolted to solid strap steel brackets which shall in turn be bolted to machine-bolt type expansion anchors (1/2 inch minimum) driven into the concrete wall. Where the distance from the wall to the signal head exceeds four inches, a bracket having a diagonal component shall be used to provide additional vertical support for the signal head as indicated on the Contract Drawings. The diagonal component shall be attached to the wall at the top and to the signal at the bottom as shown on the Contract Drawings. The use of sheet metal channel for wall mounting brackets will not be permitted.

E. Where ladders or steps are required in conjunction with wall-mounted signals, they shall be designed and field modified to fit each particular location in a manner approved by the Project Manager.

F. Where local conditions make it impossible or unsafe to use the standard specified methods for mounting a wayside signal, or where the standard specified mounting would result in sighting problems for the signal, the Contractor shall, at no additional cost to the Authority, design and furnish an alternate means for mounting the signal which is acceptable to the Project Manager. Upon receiving the Project Manager's approval for the design, the Contractor shall proceed with the fabrication of any necessary special mounting device(s) and installation of the signal in compliance with the approved design.

G. The Contractor shall check the installation of signal layouts in accordance with the approved Installation Inspection Procedure. This procedure shall be in compliance with the requirements established by Section 34 42 81, Basic Test and Inspection Requirements. Installation will not be considered complete until the Contractor has corrected all installation defects to the satisfaction of the Project Manager.

3.03 LOCATION AND HEIGHT

A. Signals shall be installed on the right side of the right-of-way (for the direction in which their aspects govern) wherever clearance and sighting conditions permit. Mainline controlled signals shall be located 9 ft. 7 inches ± 22inches downstream from the effective Insulated Joint (IJ), unless otherwise directed by the Project Manager. Marker signals (where applicable) shall be located at the effective IJ.

B. Where a signal cannot be installed on the right side due to clearance or sighting restrictions, the Contractor shall prepare plans for mounting the signal on the left side of the right of way, and submit these plans to the Project Manager for approval. Final installation of such signals shall be in accordance with the approved plans.

C. Marker signals shall be installed with their top lens 8'-6" above top-of-rail as indicated on the Contract Drawings.

D. Mast-mounted Controlled signals shall normally be installed with their bottom lens 7'-4" above top-of-rail as indicated on the Contract Drawings.

E. Wall-mounted Controlled signals shall normally be installed with their top lens 8'-6" above top of rail as indicated on the Contract Drawings.

F. At locations where wayside pushbuttons are required in conjunction with wayside signals, and at all other locations where mounting signals in the normally prescribed manner causes sighting or interference problems, the Contractor shall, at no additional cost to the Authority, mount the signal(s) in accordance with an approved alternative layout which will safely eliminate the problem.

3.04 ALIGNMENT AND FOCUSING

A. Signals shall be aligned and focused, both horizontally and vertically, in such a manner that the aspects displayed, when viewed from a position seven feet above the top of the right-hand running rail, shall be distinct, unmistakable and continuously visible over a distance of 500 feet upstream from the signals, day or night, under the most adverse

environmental conditions indigenous to the Washington, D.C. metropolitan area. See Section 34 42 14 - Environmental Requirements.

B. Where track or tunnel curvature, grade change, or other conditions make sighting impossible at 500 feet, the signal shall be mounted, aligned and focused to provide continuous sighting over the greatest distance possible, but under no circumstances shall this continuous sighting distance be less than 300 feet, unless otherwise authorized by the Project Manager.

C. Where continuous sighting from 300 feet cannot be provided, the Contractor shall provide a repeater signal as approved by the Project Manager, at no additional cost to the Authority.

3.05 TESTING

A. Factory Test and Inspection Procedures for checking complete signal units shall be submitted and performed. This procedure shall be in conformance with the requirements of Section 34 42 81, Basic ATC Test and Inspection Requirements.

B. The final operating tests to determine the acceptability of each complete signal layout shall be performed as described in Section 34 42 82, Preliminary and Interlocking Tests (Level A).

C. The Contractor shall updated existing maintenance manuals to include a test procedure for measuring the luminosity of the installed LED signal light including the test frequency and a look-up table with actions against the graded color results for each signal LED color and type. The Contractor shall also provide any special equipment that may be required by the WMATA Maintenance personnel to perform these tests.

3.06 MEASUREMENT FOR PARTIAL PAYMENTS

A. Signal Layouts will be measured for partial payments based upon the number of such complete units delivered, installed, and accepted.

B. External cable used to connect the signal unit to the TCR will not be paid for as part of the Signal Layout, but will be measured for payment separately.

END OF SECTION

SECTION 34 42 69

ATC – SNOWMELTER ELEMENTS

PART 1 - GENERAL

1.01 SECTION INCLUDES

A. This Section specifies the furnishing and installation of snowmelter layouts for all track switches within the limits of this Contract.

B. Each snowmelter layout shall consist of:
1. Two, DC voltage powered, single-ended, flat electric heating elements (switch point snowmelters) for attachment to the stock rails of turnouts in the switch point area.
2. Two Ballast (Crib) heater units for installation under the operating rod and lock (or point detector) connecting rods;
3. All external cable, rail connections and other miscellaneous hardware required to mount this equipment and to connect to the existing snowmelter control unit (case) as specified herein.

1.02 RELATED SECTIONS

A. Related work specified elsewhere shall include, but not be limited to, the following Sections:

1.	Section 34 42 16	Basic Circuit Requirements
2.	Section 34 42 18	ATC Requirements for Specific Locations
3.	Section 34 42 32	Spare ATC Equipment and Selectable Items
4.	Section 34 42 41	Basic ATC Electrical and Electronic Component Requirements
5.	Section 34 42 49	ATC Signal Wire and Cable
6.	Section 34 42 56	ATC – Interlocking Control Panels
7.	Section 34 42 64	ATC – Track Switch Operating Layouts
8.	Section 34 42 70	ATC – Snowmelter Control Cases
9.	Section 34 42 73	ATC – Conduit
10.	Section 34 42 77	ATC – Tagging and Marking
11.	Section 34 42 78	ATC – Miscellaneous Components and Materials
12.	Section 34 42 81	Basic ATC Test and Inspection Requirements
13.	Section 34 42 88	ATC – Quality Assurance

1.03 REFERENCE STANDARDS

A. All snowmelter equipment shall be designed, manufactured and tested in accordance with the latest applicable standards of NEMA, ANSI, UL, ICEA, NFPA and AREMA.

B. Switch Point and Ballast (Crib) Heating Elements shall fulfil the requirements of IEEE 515 and IEEE 515.1

1.04 QUALITY ASSURANCE

A. Each snowmelter heating element and Ballast (Crib) heater unit shall be factory tested. The factory tests for these items shall be conducted in accordance with in IEEE 515 and IEEE 515.1 as previously submitted by the Contractor and approved by the designated Project Manager.

B. Each snowmelter unit shall be rated for operation at 750 volts DC ±20 percent, and shall not be damaged by melting, charring or burning of Heater Elements, Power Termination or Lead Wires when subject to operation at voltages up to 900 volts DC.

C. As part of its factory test, each switch point snowmelter heating element and each Ballast (Crib) heater unit shall be tested in accordance with all applicable test requirements of IEEE 515 and IEEE 515.1 and meet the specific requirements listed below. Tests shall be performed on terminated Heaters.

1. DIELECTRIC TEST – At 900 V DC with Sheath not in contact with substrate in still air and air temperature not less than 50º F
   a. Perform Dielectric Test in accordance with IEEE 515.1 4.2.1
2. INSULATION RESISTANCE - Heating element assemblies shall be tested during the manufacturing process at the sealing and termination phase and the final assembly phase. Readings shall be logged and initialed for product documentation.
   a. Perform Insulation Test in accordance with IEEE 515.1 4.2.2, except that test readings shall be greater than 1,000 megohms.
3. WATER SUBMERSION TEST -
   a. Perform Water Resistance Test in accordance with IEEE 515.1 Section 4.2.3 and 4.2.4
   b. Before shipment, each switch point heating element pass a final water submersion test as submitted to and approved by the Project Manager. Immediately upon removal from the water, the heating element must have insulation resistance of at least 1,000 megohms.
4. VERIFICATION OF RATED OUTPUT – the required power output of the heating devices shall be verified by the Outdoor Exposed Surface Heating test described in IEEE 515.1, Section 4.2.11.3.2.
5. Type Testing for outdoor exposed surfaces shall be performed on each snowmelter heating element to demonstrate that the switch heater system can meet environmental constraints as described in IEEE 515.1, Section 4.3 and Section 34 42 14 – Environmental Conditions.

D. Record the results of these tests on the prescribed Factory Test Report forms for submittal to the designated Project Manager. Only those heating elements for which Factory Test Reports have been approved by the designated Project Manager shall be shipped to the job site.

E. Each snowmelter heating element and Ballast (Crib) heater unit shall be inspected immediately prior to installation of the snowmelter layouts. Only those heating elements, rod heater units which have suffered no damage due to shipment and handling shall be installed.

F. Each completely installed Snowmelter Layout shall be field tested in conjunction with the snowmelter control and indication equipment located in the Train Control Rooms. See

Section 34 42 56, ATC – Interlocking Control Panels - Hardwired and 34 42 58 – Interlocking Control Panels, Processor based.

G. Conduct the field test for Snowmelter Layouts in accordance with a field test procedure previously submitted by the Contractor and approved by the Project Manager.

H. The field test shall include, but not be limited to, verification of the following:
   1. All components of the snowmelter layouts are wired and terminated properly.
   2. The snowmelter heating elements and Ballast (Crib) heater units function properly in response to the closing and opening of the contactor contacts.

1.05 SUBMITTALS

A. Submit the following for approval by the designated Project Manager prior to purchase or fabrication of the items described:
   1. Product data for the proposed switch point snowmelter heating elements and Ballast (Crib) heater units including performance data, manufacturer's standard catalog cuts, descriptive literature and diagrams, in 8½" X 11" format, and in sufficient detail so as to clearly indicate compliance with all specified requirements and standards.
   2. Drawings showing the physical characteristics of the proposed switch point snowmelter heating elements and Ballast (Crib) heater units, and the details of proposed mounting and wiring of these devices.

B. Submit Product Certification, signed by the manufacturer certifying that products have been tested to and comply with the specified requirements. Type test data demonstrating compliance with IEEE 515.1 shall be included.

C. Submit factory test procedures for any specific testing required beyond the Product Certification type testing for switch point snowmelter heating elements and Ballast (Crib) heater units. Procedures shall be submitted to the designated Project Manager for approval prior to factory testing of these devices.

D. Submit factory test reports for switch point snowmelter heating elements and Ballast (Crib) heater units to the designated Project Manager for approval within two weeks of the date such tests are performed. These devices shall not be shipped from the factory until the designated Project Manager's approval of their respective factory test reports has been received by the Contractor.

E. Submit complete installation drawings for the snowmelter layouts prior to the installation of these layouts. These installation layouts shall be as indicated on the Contract Drawings unless otherwise approved by the designated Resident Engineer.

F. Submit calculations used to determine the amperage ratings for current monitors in the Snowmelter Control cases.

1.06 SHIPPING AND HANDLING

A. All snowmelter heating elements furnished under this Contract shall be packed, shipped and handled in such a manner that they are delivered to the Authority work site and installed without bends, kinks or any other damage.

B. All snowmelter layout parts furnished by the Contractor which are damaged in the course of shipment, handling or installation, shall be replaced by the Contractor at no additional cost to the Authority.

PART 2 - PRODUCTS

2.01 SWITCH POINT SNOWMELTER HEATING ELEMENTS

A. POWER OUTPUT - Each element shall provide uniform heating of a minimum power output of 200 watts (±5%) per foot of active length when energized at 750 volts DC.

B. The snowmelter heating elements shall be of the incoloy, stainless steel or Monel sheathed flattened element type.

C. Spiral wound Nickel chromium resistance wire shall be used for all internal heating element construction. Resistance wire shall be configured to apply consistent heat throughout the heated length of the element providing uniform low watt density per square inch. Minimum allowable watt density for elements rated at 500 feet per linear foot shall be 20 watts per square inch for 750 volt DC designs. Minimum allowable watt densities for heater elements rated lower than 500 watts shall follow a linear reduction respective to actual watts per linear foot ratings of elements.

D. Each heating element shall be minimum 0.475 inch wide. The sheath shall have a minimum wall thickness of 0.030 inch. The element sheath shall be offset at the termination end to allow the terminal to lie parallel to the rail when the element is clamped in place. Proper bending and flatness tolerances shall be held to maintain element integrity. Each Switch Point heating element shall have anti-creep securing provision to prevent excessive movement.

E. The active length of snowmelter heating elements shall be approximately one foot less than the length of the switch points for which they apply, as shown on the Contract Drawings. Cold section on cable termination end shall be a minimum of seven (7) inches and a maximum of ten (10) inches in length. Termination sleeve offset shall be within the cold section with all bends outside of the cold to hot internal junction. Cold section on dead-end shall not exceed three (3) inches.

F. Elements shall be constructed with single termination end design using multiple single conductor cables. The end termination shall be permanently environmentally and hermetically sealed. Hermetic seals shall be suitable to properly terminate, connect, insulate and secure conductors to withstand vibration, climate change, exposure to salts, sunlight, lubricants, chemicals, and conditions consistent with the harsh railroad environment. A multiple conductor cable design may be submitted, subject to Project Manager approval.

G. Each lead shall terminate in a MIL-DTL-5015 reverse bayonet style environmental resistant plug of CNC aluminum construction and black anodized or olive drab finish coating. This plug shall the 18-6 pin insert arrangement, with either potted connector backshell or wire sealing grommet insert. The Contractor shall also provide a pigtail cable sufficiently long to reach the Snowmelter control case with a mating receptacle.

H. An alternate cable arrangement may be submitted to the Project Manager for approval. This should consist of a junction box arrangement that would terminate the snowmelter control case feed and allow for surface mounting of the mating receptacles for both switch point heater and ballast (crib) heater. Sealed covers shall be provided for any vacant receptacles.

I. In lieu of the MIL-DTL connector, the contractor may submit a connector compatible with existing heater element connectors for approval. Each lead shall terminate in the male portion of an insulated quick-disconnect plug and socket connector; of railroad service-proven construction and rated at 1000 VDC minimum. Terminals shall be waterproof and shatterproof (as per MIL specification MIL-STD-202, Method 107, Condition B). In this case the Contractor shall also provide a pigtail cable sufficiently long to reach the snowmelter control case with a mating female connector.

J. Each element sheath shall be permanently marked and identified on the top face within twenty-four (24) inches of the cable exit on the termination end of the heater. Permanent markings shall include the manufacturer name, model name and number, total wattage, rated voltage, manufacture date and intellectual property identification numbers.

2.02 BALLAST (CRIB) HEATER UNITS

A. POWER OUTPUT - Each Ballast (Crib) Heater Units shall provide uniform heating of a minimum power output of 150 watts (±5%) per foot of active length when energized at 750 volts DC.

B. Each Ballast (Crib) Heater Unit heating element shall be of the Incoloy, stainless steel or Monel sheathed flattened element type mounted to a structural channel of corrosion resistant metal; Aluminum or Stainless Steel. The Heating element shall be mounted such that it can be removed from the supporting channel and replaced in the event of failure.

C. The Ballast (Crib) Heater Unit shall be no more than eight inches wide, exclusive of mounting hardware. Heater Units to be installed in ballasted track areas shall be 6 feet long. Heater Units to be installed for the point detector connecting rod of Yard switches shall be 4 feet long. Heater Units to be installed in direct fixation track areas, i.e., on concrete slab, shall be 4.5 feet long.

D. All terminations and connections shall be as specified per switch point heaters, and the leads shall be secured to the support structure with strain reliefs.

E. Each Ballast (Crib) Heater Unit shall have two 2000-volt, flexible leads of copper cable of the type specified in 2.03.A. The wire gauge shall be suitable for use in the MIL-DTL plug, minimum 10 AWG. The terminations shall be identical to the switch point heater terminals.

F. Each Ballast (Crib) heater shall bear the following legend on its top surface in three-inch high red letters: “DANGER - HIGH VOLTAGE - THIS SIDE UP”

G. The manufacturer’s name and part number shall be painted on the top surface of the structure in one-inch high letters, or on a plate permanently fixed to the structure.

2.03 WIRE AND CABLE

A. All Cables shall be flexible, single conductor, Diesel-Locomotive cable. Cable insulation shall consist of Low Smoke Zero Halogen Cross-Linked Polyolefin (XLPO) with a minimum insulation rating of 2kV. Construction shall be ASTM B33 Tinned Copper conductor, with no less than 61 strands. Cable performance properties shall meet mechanical, thermal and electrical requirements of ICEA S-95-658. Chemical resistance shall meet AREMA S501/RP- 585 specifications. American Wire Gauge size shall be determined by load calculations and manufacturers recommendation with an individual conductor size of #6 AWG.

B. Wire and cable for snowmelter layouts shall comply with requirements of Section 34 42 49, ATC Signal Wire and Cable and be as shown on the Contract Drawings unless otherwise specified. All heater element and Ballast (Crib) heater unit wiring shall be insulated for 2000 volts.

2.04 CONDUIT

A. Conduit used to protect snowmelter wire and cable for entrance to the snowmelter control cases shall be fiberglass reinforced epoxy (FRE) and for surface runs shall be fiberglass reinforced epoxy (FRE), PMA flex, or Liquid Tight with NFPA rating as specified in Section 34 42 73, ATC – Conduit, and as shown on the Contract Drawings.

PART 3 - EXECUTION

3.01 INSTALLATION OF SNOWMELTERS

A. Install all snowmelter heating elements on the field side of the stock rails in a manner which meets the following requirements:
   1. The heater shall be located on the stock rail with the active part extending from two feet ahead of point-of-switch to the vicinity of the heel block.
   2. The heater shall be secured to the lower half of the web of the rail by means of supports spaced 18 inches to 24 inches apart. One support shall be located on the rail ahead of the switch point.
   3. The anti-creep securing provision on the point heater shall be firmly fixed to the stock rail to prevent longitudinal movement. All other supports shall be arranged to allow longitudinal movement of the heater as a result of expansion and contraction.
   4. All supports shall be secured by means of 3/8 inch stainless steel bolts.
   5. Drill 13/32 inch holes in the web of the stock rails (at the neutral axis) for the 3/8 inch bolts used to secure the heater support clamps and terminal housing support clamps. The bolts shall be inserted from the gauge side of the rail with the washers and nuts installed on the field side of the rail.
   6. Leads between the heating elements and the control case shall be so located as to minimize possible damage. Mechanical protection shall be provided where necessary.

B. The Contractor shall be responsible for the removal and replacement of rail wedges where necessary. This shall include returning the rail and wedges to their initial adjustments.

3.02 INSTALLATION OF BALLAST (CRIB) HEATER UNITS

A. Install Ballast (Crib) Heater Units and all associated control, operation and indication wiring as specified herein and as indicated on the Contract Drawings.

B. Two Ballast (Crib) Heater Units shall be provided as part of each Snowmelter Layout. One unit shall be installed under the switch operating rod and the other unit shall be installed under the switch lock connecting rod. In yard installations, the second unit will be installed under the point detector connecting rod.

C. In ballasted track areas, the Contractor shall remove the Ballast (Crib) to the level of the bottom of the ties in the two cribs under the switch rods, and in a direct line beyond these cribs to provide a drainage path for the crib.

D. The heater units shall be centered in each crib, with the energy leads located on the end away from the switch machine, as indicated on the Contract Drawings. The distance from the bottom of the switch rod to the top of the heater unit shall not exceed 1.5 inches.

E. Plug-connect the heater units to their appropriate energy and negative-return leads and secure the leads and plug connectors to the ties, or to the surface of the concrete slab, as applicable, to prevent the leads from catching on carborne equipment or presenting a tripping hazard to maintenance personnel, all as indicated on the Contract Drawings. There is no "polarity" requirement for the individual Ballast (Crib) heater units, but each unit must be connected in parallel with a snowmelter heating element. See paragraph 3.03B.

F. Ballast (Crib) Heater Unit Install shall be mechanically secured by a design approved by the designated Project Manager to prevent the heater unit from shifting position by ballast heave or by suction created by passing transit cars.

G. Each Ballast (Crib) Heater Unit for a given switch shall be wired in parallel with one of the Snowmelter Heating Elements for that switch, all as indicated on the Contract Drawings.

3.03 RAIL CONNECTIONS

A. The negative return lead for each snowmelter heating element shall be connected to the neutral axis of the nearest negative propulsion return rail by means of an exothermic weld as shown on the Contract Drawings.

B. The negative return lead for each Ballast (Crib) heater unit shall be connected to the neutral axis of the same negative propulsion running rail as the negative return lead of its parallel-connected snowmelter heating element, or to the nearest impedance bond center tap in the applicable track. Under no circumstances shall the negative return lead for a Ballast (Crib) heater unit be connected to the opposite running rail from the negative return lead of its parallel-connected snowmelter heating element.

3.04 WIRE IDENTIFICATION

A. The positive and negative leads of each snowmelter heating element, Ballast (Crib) heater unit, and both high voltage cables emerging from the contact rail fuse box shall be provided with brass tags engraved with the legend "DANGER - 750 VOLTS".

B. The brass tags shall be securely attached to the power cable or wire with stainless steel wire in such a manner that the insulation on the power leads is not damaged.

3.05 MEASUREMENT FOR PARTIAL PAYMENTS

A. For measurement purposes only, each Snowmelter Layout will be considered to consist of all the Ballast (Crib) heater units and flattened electric rail heating elements controlled from one snowmelter control case, and all cable, rail connections and miscellaneous hardware and labor required to mount and interconnect the above items with the snowmelter control case as specified. Snowmelter Layouts will not be measured for payment as such.

B. Factors which will be considered when determining partial payments for Snowmelter Heating Elements and Ballast (Crib) Heater Units will include the following:
   1. Delivery of each approved item by the Contractor and approval of its Factory Test Report by the designated Project Manager.
   2. Complete installation of the respective items by the Contractor in the manner specified, and approval of the installation by the designated Project Manager.
   3. Level E partial system acceptance by the Authority of the interlocking involved.

END OF SECTION

SECTION 34 42 73

ATC - CONDUIT

PART 1 - GENERAL

1.01 SECTION INCLUDES

A. This Section specifies the design, furnishing, installation, Submittals, and inspection of conduit and associated fittings.

1.02 RELATED SECTIONS

A. Related work specified elsewhere shall include, but not be limited to, the following Sections:

1.	Section 34 42 49	ATC Signal Wire and Cable
2.	Section 34 42 61	ATC - Audio Frequency Track and Loop Circuit Layouts
3.	Section 34 42 62	ATC - Impedance Bond Layouts
4.	Section 34 42 63	ATC - Power Frequency Track Circuit Layouts
5.	Section 34 42 64	ATC - Track Switch Operating Layouts
6.	Section 34 42 66	ATC - Wayside Pushbutton Layouts
7.	Section 34 42 67	ATC - Marker Coil Layouts
8.	Section 34 42 68	ATC - LED Signal Layouts
9.	Section 34 42 72	ATC - Junction Boxes
10.	Section 34 42 77	ATC - Tagging and Marking
11.	Section 34 42 78	ATC - Miscellaneous Components and Materials
12.	Section 34 42 81	Basic ATC Test and Inspection Requirements

1.03 QUALITY ASSURANCE

A. The Contractor shall comply with the quality requirements described in Section 34 42 88, ATC - Quality Assurance.

B. The Contractor shall inspect conduit and fittings after installation.

1.04 SUBMITTALS

A. The Contractor shall submit the following for approval in accordance with the Contract Documents and with the additional requirements specified herein:

1. Manufacturer's data, including characteristics, limitations, gauges and material, showing compliance with appropriate reference standards.
2. A detailed conduit layout for all proposed buried conduit runs, including the calculated fill and size of each run. No conduit shall be installed until the applicable plan has been approved by the Project Manager.
3. A field installation inspection procedure for each type of conduit proposed to be installed under this Contract. The inspections prescribed shall determine whether conduit has been installed in conformance with the Specifications. Installation inspection procedures shall be submitted to the Project Manager for approval no later than 90 days before conduit installation starts.
4. Conduit installation inspection reports.

PART 2 - PRODUCTS

2.01 GENERAL

A. The Contractor shall supply conduits and fittings in accordance with NEC, ULI, AAR, AREMA and the requirements contained within these Specifications.

B. Conduits and fittings comprised of metal, fiberglass or other materials shall comply with the applicable requirements of NFPA 130 for the location in which the material is to be installed (e.g. station, tunnel).

2.02 RIGID STEEL CONDUIT AND FITTINGS

A. All rigid steel conduit and fittings shall be hot-dip galvanized after fabrication in accordance with ASTM A123/123M.

B. Galvanized steel, rigid conduit shall be used at locations in passenger stations, equipment rooms, beneath paved roadways, and as hereinafter specified.

C. Coupling, locknuts, and all other fittings for rigid steel conduit shall be galvanized, waterproof and threaded type only. Conduit fittings with removable covers shall be complete with gaskets.

D. Bushings shall be nylon insulated metallic and grounding type.

2.03 FIBERGLASS REINFORCED EPOXY (FRE)/PHENOLIC CONDUIT

A. FRE/Phenolic conduit installed by the Contractor shall be in accordance with ASTM D-149, NFPA 130, and have a minimum dielectric strength of 500 volts per mil, tensile strength (axial) of 11,000 psi, and an "HB" flammability rating.

B. FRE/Phenolic conduit installed by the Contractor shall have a minimum compressive load withstand rating of 3500 pounds per foot of conduit, and a minimum average impact resistance value of 25 foot-pounds.

C. FRE/Phenolic conduit and fittings installed by the Contractor shall bear nationally accepted testing laboratory approval from U.L., N.E.C. and C.S.A.

D. Conduit combustion by-products shall not contain chlorine gas in excess of trace levels and always less than safe OSHA limits.

E. Fiberglass reinforced epoxy conduit shall be FRE/Phenolic Rigid Non-Metallic Fiberglass Conduit as manufactured by FRE NorthEast or approved equal.

2.04 FLEXIBLE CONDUIT AND FITTINGS

A. The Contractor shall furnish and install flexible conduit only where specifically required by the Contract Documents.

B. Flexible conduit shall conform to the applicable requirements of UL 360 and NFPA 130.

C. Flexible conduit shall be constructed of interlocking spiral strip steel and shall be thoroughly annealed, galvanized, and shall have an extruded liquid-tight low smoke zero halogen jacket overall.

D. Construction of the flexible conduit shall be such as to permit bending of the conduit without distortion or damage to the flexible conduit.

E. The bending radii of the flexible conduit shall accommodate the maximum manufacturer approved bending radii of the largest enclosed wire or cable.

F. The Contractor shall utilize conduit fittings supplied or recommended by the manufacturer of the liquid-tight flexible metal conduit.

2.05 FLEXIBLE HOSE CONDUIT AND FITTINGS

A. Flexible hose utilized as conduit shall be furnished and installed by the Contractor where required by the Contract Documents. It shall be vari-purpose, internal tube hose with braided flexible rayon reinforcement and a neoprene cover. Where so required, the hose ends shall be pushed over suitable fittings which provide a snug fit, and fastened with stainless steel clamps. The Contractor shall obtain the Project Manager's approval of the flexible hose and stainless steel clamps prior to ordering.

2.06 TRACK LOOP CONDUIT

A. Conduit for track loop layouts shall be as specified in Section 34 42 61 - ATC - Audio Frequency Track and Loop Circuit Layouts.

2.07 PMA FLEX CONDUIT

A. PMA Flex conduit with NFPA 130 approval is permitted for surface applications. Examples include long wire cab loop, snowmelter surface wire, and impedance bond to junction box cable protection. This is subject to the Contract drawings and the Project Manager's approval.

PART 3 - EXECUTION

3.01 GENERAL REQUIREMENTS

A. The Contractor shall provide expansion fittings in conduit runs as required, to compensate for thermal expansion.

B. The Contractor shall test the integrity of the conduit by pulling a test mandrel through the length of the conduit run. The OD of the test mandrel shall be not less than 80% of the nominal ID of the conduit. The Contractor shall remove and replace conduits not passing mandrel test.

C. The Contractor shall seal conduits that are exposed to different temperatures to prevent condensation and passage of air from one area to another.

D. The Contractor shall clean burrs from ends and free inside surface from imperfections which may damage wires or cables.

E. Where existing conduit is present, the Contractor shall field verify that conduit identified as existing in the Contract Documents is in place and has sufficient capacity to accommodate the Contractor's requirements prior to submitting the installation design to the Project Manager for approval.

F. Where existing conduit is present, the Contractor shall assume they contain live circuits. The Contractor shall obtain permission from the owner of the conduit to disconnect circuits from electrical power sources and reconnect as required to install new work.

3.02 INSTALLATION

A. Prior to installation of conduit, the Contractor shall confirm that installations do not hinder or obstruct existing equipment or space, work by others or equipment or space allocated to other Products or Work.

B. The Contractor shall install all conduits in accordance with the National Electrical Code and as specified herein.

C. The Contractor shall protect conduits and ducts from entrance of water or other foreign matter by plugging ends of conduits after installation, opening only to pull cables through, then resealing immediately.

D. The Contractor shall install pull cords in conduits/ducts to facilitate wire/cable pulling and an additional wire left in place to facilitate pulling additional wires and cables. Pull cords shall be installed in all conduit runs to assist with cable pulling. Pull cord shall be ¼ inch twisted or braided nylon with a minimum tensile strength of 1000 pounds. Pull cord shall be combination footage measuring tape.

E. The Contractor shall use bends or offsets only where necessary for routing. The Contractor shall make bends and offsets in the field with the correct tools to avoid flattening of conduit and in accordance with the manufacturer's recommended procedure. Split, deformed or damaged conduits are not permitted. Care shall be taken not to overheat rigid conduit during the bending process.

F. The Contractor shall install conduits to drain moisture to nearest box. Slope conduits away from panels and cabinets.

G. The Contractor shall install steel supports necessary to mount conduit fittings, conduit and boxes in locations where no mounting surface is available.

H. At wayside train control electrical equipment locations, the Contractor shall install lengths of or fiberglass reinforced epoxy to stub-up and extend the embedded conduit installed by others to the proper location.

I. In enclosed areas, wiring in the trackway areas shall be installed in fiberglass reinforced conduit. Wiring on retaining walls or in cable troughs shall not be considered to be in the trackway.

J. Where the Contractor utilizes steel conduit embedded in the floor of the tunnel, the Contractor shall provide, as a minimum, protective bushings for the ends.

K. Unless otherwise required by the Contract Documents, wiring in vertical runs in the track in ballasted areas shall be in flexible hose conduit where it runs to a device on the ties or rails, and in fiberglass (FRE)in all other places.

L. The Contractor shall install all exposed conduit runs parallel to walls, floors and ceilings. Conduits shall be supported at intervals not to exceed eight feet for rigid steel conduit and four feet for flexible conduit.

M. The Contractor shall support and fiberglass reinforced epoxy conduit at intervals as required in Table 347-8 of the National Electrical Code. Cast, single-hole, malleable iron, galvanized pipe straps of the proper size shall be used for the support of individual conduit runs on concrete surfaces. Where conduit is supported on concrete surfaces, rust-proof stud anchors as specified in Section 34 42 78, ATC Miscellaneous Components and Materials shall be used. Galvanized conduit spacers (back straps) shall be used with the conduit clamps to space the conduit away from the mounting surface.

N. The Contractor shall use conduit of sufficient size to leave, as a minimum after installation of wire, the percentage of free space specified in the National Electrical Code.

O. The Contractor shall paint steel conduit threads with anti-seize, anti-corrosion surface treatment compound, to prevent rust and enhance conductivity.

P. The Contractor shall not clamp or connect rigid or flexible steel conduit to equipment racks or trays in equipment rooms in any manner which results in an electrically conductive path between the conduit and the rack or tray.

Q. The Contractor shall install fittings with removable side plates (pull boxes) on long conduit runs at intervals of no more than 75 feet and in accordance with the National Electrical Code. In the less-than-75-foot conduit segments thus formed, an additional fitting of the same type shall be added each time the total number of degrees in bends exceeds 180. All such fittings shall be of sufficient length of allow the installation of wire or cable without exceeding its minimum bending radius, either as installed or during installation.

R. The minimum bending radius to be used by the Contractor shall be as specified by the manufacturer, or as specified in Articles 370-18 or 370-51 (as applicable) of the National Electrical Code.

S. The Contractor shall connect conduit to equipment enclosures and junction boxes in accordance with the approved installation drawings. Proper fittings with appropriate gasketing and protective bushings shall be utilized.

T. All conduit installed by the Contractor shall be identified as described in Section 34 42 77, ATC - Tagging and Marking.

U. The Contractor shall install a short (1 to 3 feet) section of liquid-tight flexible metal or flexible hose conduit where rigid conduit is to be connected to a device which consists of, or contains, a rotating or vibrating mass.

V. The Contractor shall ground and close with a watertight fitting, all conduits provided in the TCR for train control, but not used.

W. The Contractor shall ensure that all metallic raceways, fittings, boxes and cabinets, do not come in contact with reinforcing steel.

X. The Contractor shall separate contact surfaces by means of a gasket, non-absorptive tape or special coating to prevent corrosion where aluminum is placed in contact with dissimilar metal or with concrete.

3.03 MEASUREMENT FOR PARTIAL PAYMENTS

A. The cost of all connections, fittings and fastening devices shall be included in the cost for each applicable type of conduit.

B. Rigid steel, fiberglass and reinforced epoxy conduit will be measured for partial payments based upon the linear footage of each type of such approved conduit delivered, installed, and accepted at each TCR area.

C. Flexible conduit, pma and flexible hose conduit will be measured for partial payments based upon the linear footage installed and accepted.

D. Factors which will be considered when determining partial payments for applicable footage of rigid conduit (including associated fittings) will include the following:
   1. Installation of the conduit by the Contractor and approval of the installation by the designated Resident Engineer.
   2. Correction of all conduit installation discrepancies by the Contractor to the satisfaction of the designated Resident Engineer.

END OF SECTION

SECTION 34 42 81

BASIC ATC TEST AND INSPECTION REQUIREMENTS

PART 1 - GENERAL

1.01 SECTION INCLUDES

A. This Section specifies the basic criteria for factory and field tests and field installation inspections which the Contractor shall devise, perform and document on the various Automatic Train Control systems, subsystems, assemblies, subassemblies, and components provided under this Contract, to demonstrate that each is in compliance with these Specifications.

1.02 RELATED SECTIONS

A. Related work specified elsewhere shall include, but not be limited to, the following Sections:

1.	Division 1	General Requirements
2.	(Article IX)	Commencement, Prosecution and Completion of Work
3.	(Article VI.A)	Progress Schedules Quality Assurance
4.	Section 34 42 01	ATC – Abbreviations and Definition for ATC
5.	Section 34 42 04	Current Automatic Train Control System
6.	Section 34 42 05	ATC – Transit Vehicle Characteristics
7.	Section 34 42 16	Basic Circuit Requirements
8.	Section 34 42 17	Basic Interlocking Requirements
9.	Section 34 42 18	ATC Requirements for Specific Locations
10.	Section 34 42 19	ATC System RAM and Safety Program
11.	Section 34 42 49	ATC Signal Wire and Cable
12.	Section 34 42 77	ATC – Tagging and Marking
13.	Section 34 42 82	ATC – Preliminary and Interlocking Tests (Level A)
14.	Section 34 42 83	ATC – Train Separation Tests (Level B)
15.	Section 34 42 84	ATC – ATO and Local ATS Tests (Level C)
16.	Section 34 42 85	ATC – DTS Interface Tests (Level D)
17.	Section 34 42 86	ATC – Miscellaneous Tests (Level E)
18.	Section 34 42 87	ATC – System Level Tests (Level F)
19.	Section 34 42 88	ATC – Quality Assurance

1.03 QUALITY ASSURANCE

A. The quality of materials, fabrication and finish of all ATC components, and their compliance with these Specifications, shall be assured by the factory tests and inspections which the Contractor shall devise and perform as specified in the various ATC Sections of these Specifications.

B. The quality of the wayside ATC System installation shall be assured through the performance by the Contractor of tests and inspections made during the progress of this Contract and after completing the installation of equipment. These tests and inspections shall consist of, but not be limited to, factory tests, field installation inspections, circuit breakdown tests, wiring verification tests, continuity tests, resistance tests, voltage and current tests, time tests, flame tests, operating tests, simulation tests, and other electrical and mechanical tests and

inspections required by the Project Manager to prove that every system and device in the installation meets these Specification and design requirements.

C. The Contractor shall devise, perform and document such factory tests as are necessary to ensure the appropriate degree of quality for items manufactured or fabricated for use on the ATC system specified herein.

D. The Contractor shall devise, perform and document field installation inspections to ensure that all Train Control equipment furnished in association with this Contract is installed, connected and adjusted in compliance with the Contract Documents.

E. The Contractor shall devise, perform and document such field tests as are required by the various Sections within these Specifications and Section 34 42 88 to ensure that all wayside ATC systems, subsystems, and operating equipment, provided under this Contract, function in a safe and proper manner and as required by the Contract Documents.

F. The validity of each field test shall be demonstrated to the Project Manager, either at the factory with simulated equipment or in the field on newly installed equipment. (Simulated tests at the factory for vital equipment such as track circuits will not be acceptable.) The Project Manager must be satisfied that the test procedure adequately determines that the equipment is working properly, in a safe manner, and that it meets or exceeds the requirements of the Specifications. The Project Manager will signify his satisfaction with the test procedure by placing his signature on the first page of the document. A test procedure shall be considered valid and accepted only when the document has been signed by the Project Manager as well as the Contractor.

G. Any ATC module, device or appliance, furnished or provided under this Contract, which requires power to be supplied from a power supply system, regardless of system voltage, current or frequency, shall operate satisfactorily throughout the range of plus or minus 10 percent of the rated system voltage. The Contractor shall demonstrate conformance with this requirement in either the type acceptance test or the factory test.

H. The Contractor's Quality Assurance Manager shall ensure that the approved test procedures are on site and being executed per the requirements of the approved procedure. This information shall be conveyed to the Project Manager. The QA Manager shall initial and date any portion of the test data sheets witnessed during spot checks. The QA Manager shall stop testing activities if an approved copy of the test procedure is not on site and being utilized. Testing shall not resume until a stamped approved copy of the test procedure is on site.

1.04 SUBMITTALS

A. The Contractor shall, submit for approval of the Project Manager, three copies of the following:
   1. A list called "Master List of Factory Tests" which lists and briefly describes the tests to be performed on each piece of equipment furnished under this Contract.
   2. A list called "Master List of Installation Inspections" which lists and briefly describes the inspections to be performed in the field upon installation of Train Control equipment. This list shall include, but not be limited to, inspections for the following items and associated components:
      a. Wall mounted power distribution equipment:
         1) Circuit breaker cabinets

2) Transfer and bypass equipment
3) Transformers

b. Equipment racks to include all equipment mounted thereon:
1) Interlocking control panels
2) Track and alarm indication panels
3) Vital relays
4) Non-vital relays and timers
5) Modules and cabinets
6) Power supplies
7) Transformers
8) Ground detectors
9) Vital and Non-Vital Processors

c. Cable trays
d. Grounding systems (all components)
e. External and internal cable
f. Negative return bonding
g. Signal rail bonding
h. Impedance bond layouts
i. Marker coil layouts
j. Long Wire Loops
k. Power frequency track circuits
l. Audio frequency track circuits
m. Signal layouts
n. Track switch and snowmelter operating layouts
o. Equipment and interface cases and junction boxes
p. Wayside signs and markers

3. A list called "Master List of Field Tests" which lists by number and describes the various field tests that the Contractor plans to perform in the field. This list may be all-inclusive providing references to tests not to be performed at certain locations or on the current Contract. The tests to be performed at each location shall, in some manner, be delineated.

4. Progress Schedules
a. The Contractor shall include in the Progress Schedules a complete description of the testing to be provided under this Contract. The Progress Schedule shall delineate the order in which the various required field installation inspections and field tests are to be made and their durations. The Progress Schedules shall show how the Contractor plans to meet the installation and testing dates required by the Contract.
b. The Progress Schedule provided by the Contractor shall conform to the following requirements:
1) Supplementary data to be included with the schedule shall include an estimate of the test and train requirements, number of man-days required for each test, and the number of men the Contractor plans to utilize for testing.
2) The Contractor shall construct this schedule to allow each test to have its prerequisite testing complete before the test is started. If the resulting approved order of testing is not followed, the Contractor may be required by the Project Manager to repeat some tests, and such repeat testing will be at no cost to the Authority.

5. A list of all field tests to be performed at each location affected by this Contract.
a. This list shall include the following items for each field test listed:
1) List issue number

2) Test procedure
3) Current revision number of the test procedure
4) Descriptive title of test
5) Acceptance level of test
6) Prerequisite tests and/or installation inspections required
7) Remarks
8) Date on which list was revised and reason.

b. This list shall have a Project Manager approved distribution list which shall include all personnel deemed required by WMATA.

c. This list shall be reissued following every list revision.

B. The Contractor shall, submit a Field Installation Inspection Procedure for each of the field installation inspections to be performed. These field installation inspection procedures shall include, but not be limited to the following items:

1. Title sheet
2. Revision log
3. Table of Contents
4. Introduction
5. Responsibilities
6. List of applicable documents
7. List of items to be inspected
8. Quality assurance flow diagram
9. Field installation inspection check list
10. Discrepancy List
11. Discrepancy Resolution Sheet
12. Designated spaces for signatures of inspection personnel and Contractor's project manager
13. Designated space for signature of Authority's witnessing inspector.

C. The Contractor shall, submit three copies of a basic "Test Report" document (on 8-1/2 inch by 11 inch and/or 11 inch by 17 inch paper) for every field and factory test required in these Specifications. This document shall include titled lines for the following information:

1. Prerequisite installation inspections and tests, and all other prerequisite installation documents or information necessary
2. Name and number of test
3. Date and time of start and conclusion of test
4. Names of personnel performing test
5. Name of Test Supervisor
6. Names, model numbers, calibration dates and serial numbers of all instruments used in test
7. Results of test
8. List of difficulties or discrepancies encountered in test
9. Signatures of test personnel and Test Supervisor
10. List of circuit pages, drawings, and/or arrangement plans used during test
11. List of circuit pages, arrangement plans or other documents revised due to corrections or modifications
12. Miscellaneous comments
13. Train car numbers and current train validation date.

D. The Contractor shall endeavor to minimize the amount of paper required for the Test Report forms by providing self explanatory boxes to check, in lieu of long written descriptions made during the test.

E. The Contractor shall, at least 30 calendar days prior to the commencement of manufacture, submit for approval of the Project Manager, detailed factory test documents as described herein. These test documents shall conform to the following requirements:
1. The Contractor's factory test documents shall consist of a test procedure and pre-printed data sheets and/or inspection sheets for each test.
2. When completed by the factory test personnel and checked for accuracy and completeness, the data sheets shall be submitted as the factory test report.
3. The Contractor shall submit these data sheets to the Project Manager and receive formal approval thereof before the equipment thereby tested is shipped.
4. When factory tests require specific meter or test instrument readings, the pre-printed data sheet shall show the allowable range of values, and each part of the test. The test report shall also contain a checkoff system for each action and a blank space adjacent to the expected range of values in which to record the test readings. When tests include observations of pertinent responses which do not require instrument readings, each response shall have its own checkmark. No single checkmark shall be used for groups of responses.
5. If, during the factory test, a discrepancy is found, it shall be corrected and any affected portion of the test shall be repeated. No piece of equipment with an uncorrected discrepancy shall be shipped.
6. If, during the factory test, a discrepancy is found which cannot be corrected, testing shall be discontinued and the Project Manager shall be notified and furnished with the test results and all particulars.
7. Each device requiring factory test shall be given a model number to which the test documents are keyed. Any change in the organization or construction of the device shall result in a new model number or alternatively, the same model number, but a new series number. Each device requiring factory test shall have a serial number which shall be unique for any given model number. These numbers shall appear on the device.

F. For each field installation inspection the Contractor shall submit, at least two weeks after the inspection, a Field Installation Inspection Report which shall include, but not be limited to, the following:
1. Title sheet showing specific equipment inspected
2. Check list
3. Discrepancy list
4. Discrepancy resolution sheet
5. Signatures of Contractor's inspection personnel and Project Manager
6. Signature of Authority's witnessing inspector.

G. For each field test the Contractor shall submit a detailed test procedure, as described herein, at least 60 calendar days prior to the scheduled performance of the test for approval of the Project Manager. These test procedures shall meet, as a minimum, the following requirements:
1. The Contractor's field test documents shall consist of applicable, approved pre-printed data sheets for recording data for each test. When preprinted data sheets are used for more than one set of conditions, the Contractor shall identify each set of conditions on separate data sheets. For all tests, if a check mark is required to indicate proper performance, the data sheet shall have a box for indicating the nomenclature of the applicable device, and the desired condition, e.g., XXX relay energized (or de-energized), YYY light indication on (or off), or color, etc. When completed by the field test personnel and checked for accuracy and completeness, the sheets shall be submitted to the Project Manager as the test report.
2. When field tests require specific meter or test instrument readings, the pre-printed data sheet shall show the allowable range of values, for each part of the test by

providing on the data sheet, the maximum and minimum values for each value measured. The test report shall also contain a check-off system for each action and a blank space adjacent to the expected value in which to record the test readings. When tests include observations of pertinent responses which do not require instrument readings, each response shall have its own checkmark. No single checkmark shall be used for groups of responses.

3. If, during the field test, a discrepancy is found, it shall be corrected and any affected portion of the test shall be repeated. No piece of equipment or test with an uncorrected discrepancy will be approved.
4. If, during the field test, a discrepancy is found which cannot be corrected, testing shall be discontinued and the Project Manager shall be notified and furnished with the test results and all particulars. Corrective action by the Contractor shall be started immediately.
5. The field test report shall also contain a final discrepancy sheet on which the Contractor shall record discrepancies found and action taken. This documentation shall be furnished to the Project Manager. All test reports shall be dated and signed by the responsible employee of the Contractor, or subcontractor, on the day the test is performed. Space shall also be provided for the signature of the witnessing inspector.
6. Each step of the test procedure shall be clearly written in a manner which describes the action to be performed and also the purpose of the step.
7. Test procedures shall be clearly worded. A Glossary of Technical Terms shall be provided with each group of test procedures submitted. No technical words shall be used which are not in the Glossary. No words may be used in the test procedures which are not either in the Glossary or in common usage as defined by their inclusion in a commonly used "desk" or "college" edition dictionary. Words shall have their common meaning or a meaning in general use in the Signal Industry.
8. A Glossary of Abbreviations shall be provided with each group of test procedures submitted. No abbreviation may be used in the test procedure which is not included in the Glossary of Abbreviations.
9. Test procedures shall not be written for specific locations, but shall be general, and apply to all locations of the same general type. Where a particular location has a special feature not usually found in locations of the same general type, the Contractor shall add a special section to the general procedure, clearly designated for that special feature. The Contractor shall provide entry spaces in the Data Sheets for the entry of the data which makes the general test procedure specific for specific locations. Examples of such data are:
   a. Location designations
   b. Adjacent location designations
   c. Track circuit numbers
   d. Signal numbers
   e. Train numbers
10. The Contractor shall record the results of each factory or field test as specified herein. The Contractor shall submit properly executed test documents for each prescribed test within not more than two weeks of completion of the individual tests. All test reports shall be checked and approved by the Contractor prior to submittal to the Project Manager. The test report shall be all-inclusive, that is it shall contain all required data, reference drawings, explanations, and other information necessary to permit evaluation without the necessity of securing this information from other sources by those responsible for evaluating the test report. All superfluous data shall be so marked or eliminated from the test report prior to submittal. The test report shall be legible in its entirety. Test reports which do not meet the requirements as outlined in these paragraphs will be rejected.

H. The Contractor shall organize each test procedure into the following sections:
1. Title Sheet - containing the test procedure title, number, acceptance level, issue date and revision date. This sheet shall also present a concise, but complete statement of the purpose of the test described. Finally, blanks shall be provided for the signatures (and dates of signatures) of the Contractor's responsible personnel and the Project Manager.
2. Table of Contents
3. List of test and installation inspection prerequisites
4. List of abbreviations used in test
5. List of test equipment required
6. Preliminary information (background information further clarifying the purpose of the test)
7. Test description
8. Data sheets for recording results. These sheets shall include maximum and minimum values for expected results and shall include boxes to be checked for each adjustable circuit component to indicate that the adjustment is within the acceptable mid-50 percent range.

I. Prior to the commencement of any test, the Contractor shall present a copy of the approved test procedure to the Project Manager who is to witness the test.

PART 2 - PRODUCTS

2.01 DESCRIPTION OF BASIC TRAIN CONTROL TEST AND INSPECTION WORK REQUIRED

A. The Contractor shall review the Wayside Test Procedure (WTP) requirements described in Sections 34 42 82 through 34 42 87, inclusive, for applicability to the ATC system(s) and equipment the Contractor proposes to furnish under this Contract. The described test procedures or any additional wayside (field) test procedures necessary for applicability to the system(s) or equipment the Contractor proposes to furnish shall be prepared, submitted for approval, and, when approved, executed by the Contractor at no additional cost to the Authority. Wayside Test Procedures approved for previous WMATA contracts, if any, upon resubmittal, will not receive automatic approval, but will be thoroughly reviewed for conformance with the current requirements of these Specifications.

B. The Contractor shall be responsible for the costs of any personnel, special equipment and assistance required to conduct all required tests and field installation inspections to complete the required documentation. When a device or system does not meet the specification requirements initially, the Contractor shall make the necessary corrections and shall be responsible for the total cost of additional tests and/or inspections required to prove compliance. The Contractor will not be responsible for the cost of train operation; these costs will be borne by the Authority to the extent agreed upon by approval of the Contractor's requirements in the test procedure.

C. No test which requires that a potentiometer, adjustable resistor or other adjustable component be adjusted to within 25 percent of its maximum or minimum value in order to achieve the required test results will be considered satisfactorily completed except in those instances where non-compliance has been specifically approved by the Engineer. (See Section 34 42 16, Basic Circuit Requirements.) When a component adjustment is within 25 percent of its limits, the Contractor shall notify the Project Manager, commence corrective action and schedule a retest to take place after the condition is corrected.

D. The WTP number designations used in these Specifications are based upon numbers used for tests of the ATC system to date. These designations may be altered (subject to approval by the WMATA Project Manager) in the proposed test procedures. The Contractor shall provide a detailed description in writing of the relationship between the existing and any proposed test procedures. The proposed testing scheme shall, as a minimum, address all of the requirements of this article as well as the specific article describing the test and may include additional tests deemed necessary by the Contractor in order to meet his responsibilities of providing a complete, safe and workable system. Any such additions shall be brought to the attention of the Project Manager. Each WTP number shall be used as a file name for that test procedure.

E. Upon approval from the Project Manager, the Contractor may elect to conduct two or more of the required tests at the same time, to reduce train movements and time requirements. When two or more of the required tests are conducted at the same time, the Contractor shall provide a single test procedure with clearly designated, consecutive steps covering the combined tests and a single series of Data Sheets shall be provided, with consecutive numbering. The Contractor shall exercise care to assure that the combined tests do not require more time than the tests performed separately. In the event that they do, any additional time required will be at no additional cost to the Authority.

F. The Contractor shall submit to the Project Manager for approval, a list of all the test equipment required for the tests. Such pieces of equipment shall be adequate for the test to be made and shall meet with the Project Manager's approval. If special test fixtures are required, sufficient documentation shall be submitted with the list to enable the Project Manager to make a judgment regarding their suitability. The special test equipment shall become the property of the Authority at the conclusion of the test requiring it. Wherever possible the test equipment shall be of the multipurpose type, thus minimizing the number of different pieces of test equipment required.

G. A minimum of one of each item of test equipment required for testing shall be delivered to WMATA by the Contractor prior to the start of testing. Any associated or required software or special licenses shall be included with this equipment. Upon request the Contractor may utilize specialized test equipment which has been delivered under this Contract. The Contractor shall be responsible for the calibration of such equipment and shall provide new equipment upon return to WMATA. The Contractor shall replace any equipment damaged while in the Contractor's custody at no cost to the Authority.

H. The Contractor shall give the Project Manager sufficient advance notice of all field installation inspections and field tests to enable the Project Manager to witness such inspections and tests. Field installation inspections and tests shall not proceed without prior notification to the Project Manager. The Contractor shall make any provisions necessary for the Project Manager to witness such inspections and tests. Should the Project Manager decline to witness any such inspection or test, the Contractor shall keep the Project Manager apprised of the progress and results of the inspection or test.

I. The Contractor shall keep a master log of all field testing, with a special emphasis on all problems encountered and readjustments or revisions necessary to correct the problems. As an alternative, the Contractor shall require each individual tester to maintain individual testing logs. In either case, the log(s), or a legible copy of the log(s) shall be delivered to the Authority on a monthly basis. The original log(s) shall be available for inspection by the Authority at any time during the applicable testing period(s). Upon conclusion of all testing by the Contractor, the final logs shall be delivered to the Authority.

2.02 TEST INSTRUMENTS

A. The Contractor shall use only test and inspection instruments which are of the proper type and capacity for the task required.

B. The Contractor shall use only test and inspection instruments which are properly calibrated with the latest calibration certificate and in good working order.

C. The Contractor shall obtain approval of test and inspection instruments in accordance with the provisions of Sections 34 42 82, 34 42 83, 34 42 84, 34 42 85, 34 42 86 and 34 42 87 of these Specifications.

PART 3 - EXECUTION

3.01 FACTORY TESTS AND INSPECTIONS

A. The Contractor and/or his subcontractors shall perform all necessary factory tests and inspections of systems, subsystems, assemblies, subassemblies, and components supplies under this Contract to ensure compliance with these Specifications. These tests shall verify design and nameplate ratings, and shall ensure adequate and proper performance, safety and reliability.

B. All systems, subsystems, and components forming an integral part of a fail-safe circuit and all electronic devices shall be 100 percent inspected and tested. All components, other than those related to fail-safe circuits shall be tested on a sampling basis in accordance with a recognized standard, such as ANSI/ANQC Z 1.4 or an approved equal. An approved number of randomly selected components or units form the manufacturing process shall be tested to ensure the adequacy and acceptability of all components and units produced. Bidders shall indicate in their proposals:
   1. The tests to be performed on each type of component or unit, and;
   2. The numbers of each type of component or unit to be tested to demonstrate the adequacy of design and quality control.

C. When test results are not recorded on a test-data plate affixed to the component or unit, the Contractor shall furnish certified test reports for each item at the time of delivery.

D. Each component and unit shall be inspected at its point of manufacture and evidence of this inspection and acceptability shall be indicated on the item where practicable.

E. The Authority and the Project Manager reserve the right to witness any or all tests and inspections in the Contractor's and/or subcontractors' plants. The Contractor shall advise the Project Manager a minimum of two weeks in advance of each test. When tests are to be conducted continuously as a production-line routine, the Contractor shall advise the Project Manager two weeks in advance of the start of such tests and shall indicate the duration of the period over which such tests will be conducted.

F. All test and inspection procedures shall be subject to the approval of the Project Manager.

3.02 FIELD INSTALLATION INSPECTIONS

A. The Contractor shall perform in the field all installation inspections necessary to ensure the proper installation of all Train Control equipment installed under this Contract. These inspections shall verify that all equipment to be provided is present, properly installed, tagged and marked according to Section 34 42 77, ATC – Tagging and Marking. These inspections shall be performed in the manner described in the Contractor's Field Installation Inspection Procedures as approved by the Project Manager.

B. The Contractor shall record the results of each field installation inspection and submit the completed report to the Project Manager for approval. The Project Manager will review the installation inspection reports in conjunction with any on-site inspections considered necessary in the Project Manager's sole and absolute discretion, and inform the Contractor as to whether the inspected area is acceptable for field testing. The Project Manager reserves the right to decide whether installation inspection discrepancies, either noted in the Contractor's reports or noted by the Project Manager during an on-site inspection, must be corrected prior to commencement of field tests.

C. It is the intent of these Specifications that the Field Installation Inspections ensure that proper installation of equipment has been accomplished prior to the commencement of field testing. Approval of the installation does not constitute final or partial acceptance of the equipment by the Authority.

3.03 FIELD TESTS

A. The Contractor shall perform in the field all tests required to ensure the proper and safe operation of all equipment, systems and subsystems and to prove the adequacy and acceptability of the total installation. The tests to be performed shall cause each system and subsystem to be sequenced through its required operations, including the imposition of simulated conditions to prove that the installation complies with all specified fail-safe requirements.

B. Contractor Responsibility
1. The Contractor shall develop computerized spread sheets or data bases to track all field tests and test results. Copies of all software used which is not already in use by the Project Manager shall be delivered to the Project Manager along with the computerized data sheets prior to commencement of testing.
2. The Contractor shall provide equipment and apparatus required for the tests and shall disconnect and reconnect any connections necessary in performing the tests.
3. For each test crew, the Contractor shall provide a notebook-style computer capable of running the programs used for test result tracking by the witness. These computers will remain in the possession of the Project Manager until the review of test data is complete.
4. Wherever practicable, Test Data sheets shall be computer-generated printouts. The Data Sheets will be checked and, if acceptable, signed by the Project Manager's Representative. Copies of the completed test data shall be submitted by the Contractor as an electronic copy along with the signed hard copy.

C. Only those field tests which are conducted and documented by the Contractor after the Project Manager has notified the Contractor that the installations are acceptable will be considered valid tests and be accepted for review by the Project Manager.

D. The Contractor's field testing shall be divided into six "Levels," (A, B, C, D, E and F) as specified in Sections 34 42 82, 34 42 83, 34 42 84, 34 42 85, 34 42 86 and 34 42 87 respectively. The tests shall be performed in sequence and conducted in compliance with the requirements set forth in the Contract Documents.

E. There will be a period of time after Level C Test WTP 2.7 and all Level A testing has been completed, which will be reserved for the Authority to certify the system for train operations, energize the wayside (Propulsion Power) system and condition the rails for the remaining Level B testing. The wayside will not be available to the Contractor during this energization period. All Level A testing and Level C test WTP 2.7 must be complete prior to energization.

F. There will be a period after all Level B, C, D and E testing has been completed which shall be reserved for the Authority to conduct its own testing and evaluation. At the conclusion of this period, the Contractor shall commence the Level F testing if so authorized by the Project Manager. The Authority will inspect each TCR to determine if the TCR is ready for Level F testing. The Contractor shall endeavor to minimize all installation and testing discrepancies prior to this period. The Project Manager will not authorize the start of Level F testing if discrepancies are found that constitute a lack of confidence in the Contractor's performance. Discrepancies in circuits, and data sheets containing data that do not meet the Contract requirements are examples of situations which will create such lack of confidence.

G. The Contractor's testing activities and access to the energized test areas will be controlled by WMATA. Only Authority-authorized Contractor personnel, with escort, will be allowed in the track bed in an energized area, and only for tasks in support of the test program which can safely be performed in the energized environment. For other activities, the Contractor will be required to make arrangements in advance with the Project Manager for removal of power, where applicable.. .

H. The Contractor's access to active revenue area shall be governed by SSWPs which have been approved by the Project Manager. Failure to comply with SSWP requirements shall result in disciplinary action against the Contractor, according to the Contract Documents.

I. After energization, the Contractor shall not move any switch points, or operate any switch-and-lock movements. During this time, the Contractor shall request the Authority to facilitate any required switch point movements or operations.

J. When it is necessary for the Contractor to utilize one or more trains for conducting tests according to these Specifications, the Authority will furnish the proper number of "valid trains" and train operators as long as the total number of trains does not exceed the number of trains specified herein. Each train will be available according to the following conditions:

1. A "valid train" will be considered to be a train on which all electrical facilities, controls, motive power equipment and brake gear is in good operating order and a train which responds correctly to the Daily Safety Test at an existing location. In addition to the requirements specified above, a "valid train" for safe braking distance (SBD) purposes shall meet the requirements specified in Section 34 42 05 - Acceleration and Brake Rates.

2. The Contractor shall, as a minimum, have one qualified, experienced technician per test train, and one qualified, experienced test supervisor for dynamic testing, who shall be full time salaried employees of the Contractor.

3. The Contractor shall submit a request to the Project Manager for the necessary equipment required for testing at least two weeks prior to start of testing.

4. Equipment shall be made available to the Contractor as required throughout the duration of the testing period and rotated back to the shop for maintenance checks as required,

5. If equipment on the valid train becomes inoperative as a result of an action taken by the Contractor, the Contractor shall bear the cost of restoring the equipment to proper working order.

6. It shall be the responsibility of the Contractor to keep a log of any changes or readjustments made on the "valid train" while it is being used by the Contractor. This log shall be turned over to the Authority with the train at the end of the testing period for which the train is required.

7. No changes, replacements or readjustments shall be made to any connections, wiring or equipment aboard the "valid train" without the knowledge and express consent of the Project Manager. The Contractor shall make all modifications and equipment changes to the test train, as approved by the Project Manager, and shall revert all modifications upon completion of testing.

8. Interface testing must be scheduled two weeks in advance of the test start date. Current available non-revenue hours are as follows:
   a. 1:30 am - 3:30 am Monday through Friday
   b. 2:30 am - 4:30 am Saturday
   c. 2:30 am - 5:30 am Sunday
   d. Test preparations, such as equipment set-up, data sheet preparation, boarding of a train, etc., shall be completed in advance of access periods.

9. Track inspection will be performed by the Authority prior to the start of each working day in non-revenue hours. The trackway will not be available for testing during these inspection periods.

K. All field tests and procedures will be subject to the approval of the Project Manager. The Project Manager will have the right to witness any or all field tests conducted. The Contractor shall notify the Project Manager in writing at least 48 hours prior to each test.

L. Following the completion of each field test, the test results, data sheets and other required records shall be furnished to the Project Manager. Where the installation did not comply with the Specifications, the remedial action taken by the Contractor shall be recorded and included with the test results.

M. The Contractor shall resolve all field test discrepancies in accordance with applicable sections of the following procedure:
   1. Upon discovery of each discrepancy, the Contractor shall describe the discrepancy on the data sheet form which he has provided for that purpose.
   2. If the discrepancy is due to an error in field wiring and connections which do not agree with the approved circuit plans, the Contractor may correct such errors without prior approval of the Project Manager.

3. If the test discrepancy is due to an error in the approved circuit, the Contractor shall not make any changes which affect safety of operation of the approved circuits, as designed, without prior approval of the Project Manager.
4. The Contractor shall retest the affected portions of each discrepancy he has corrected.
5. The retest shall be documented by the Contractor in the manner prescribed in these Specifications.
6. Whenever a resolution to the discrepancy is not available at the conclusion of the test, the Contractor shall describe the follow-on action required and list responsibility for such action in the initial field test report.

N. The Project Manager will make all final determinations as to whether only a part, or the whole test, shall be re-run when any specific field test does not meet the requirements specified for the test.

3.04 MEASUREMENT FOR PARTIAL PAYMENTS

A. Testing of the wayside ATC System and equipment for each TCR area of control will be divided into the following categories for measurement purposes for partial payments:
1. Factory Test Documentation
2. Level A Tests
3. Level B Tests
4. Level C Tests
5. Level D Tests
6. Level E Tests
7. Level F Tests
   a. The six test "Levels" (A, B, C, D, E and F) are defined in Sections 34 42 82, 34 42 83, 34 42 84, 34 42 85, 34 42 86, and 34 42 87, respectively, and in SECTION 101, Article IX, Commencement, Prosecution and Completion of Work.
8. Test Report Discrepancy Correction
9. Field Wire and Cable (F.W.& C.) Test Documentation
10. F.W.& C. Test Report Discrepancy Correction

B. In addition to the items listed above, the following items will be measured for partial payments as part of the testing for the first TCR area of control to be tested:
1. Master List of all ATC Factory Tests required under this Contract, and Factory Test Procedures for all such required tests.
2. Master List of all ATC Field Tests required under this Contract, and ATC Field Test Procedures for all such required tests.

3.05 PAYMENT

A. The sum of payments for ATC Testing at each TCR area of control will equal the Lump Sum Price listed in the Unit Price Schedule for the applicable area under:
1. (NAME OF FIRST TCR LOCATION) ATC TESTING
2. (NAME OF SECOND TCR LOCATION) ATC TESTING (As Applicable)
3. (NAME OF THIRD TCR LOCATION) ATC TESTING (As Applicable)
4. (Etc. as Applicable)

END OF SECTION

SECTION 34 42 82

ATC – PRELIMINARY AND INTERLOCKING TESTS (LEVEL A)

PART 1 - GENERAL

1.01 SECTION INCLUDES

A. This Section specifies the criteria for the field tests and inspections which the Contractor shall develop and conduct in order to prove that the ATC system at individual TCR locations is ready for system testing and to verify that interlockings at such locations are acceptable for manual train operation.

1.02 RELATED SECTIONS

A. Related work specified elsewhere shall include, but not be limited to, the following Sections:

1. Section 34 42 04 Current Automatic Train Control System
2. Section 34 42 16 Basic Circuit Requirements
3. Section 34 42 17 Basic Interlocking Requirements
4. Section 34 42 18 ATC Requirements for Specific Locations
5. Section 34 42 24 ATC – Microprocessor Systems
6. Section 34 42 41 Basic ATC Electrical and Electronic Components Requirements
7. Section 34 42 77 ATC – Tagging and Marking
8. Section 34 42 81 Basic ATC Test and Inspection Requirements
9. Section 34 42 86 ATC – Miscellaneous Tests (Level E)
10. Section 34 42 97 ATC – Appendix “SS” DTS Scan Sheets

1.03 QUALITY ASSURANCE

A. The quality of the wayside ATC System installation shall be assured through the performance by the Contractor of tests and inspections made during the progress of this Contract and after completing the installation of equipment in the field. These tests and inspections shall consist of, but not be limited to, field tests, field installation inspections, circuit breakdown tests, wiring verification tests, continuity tests, resistance tests, voltage and current tests, time tests, flame tests, operating tests, simulation tests, and other electrical and mechanical tests and inspections required by the Project Manager to prove that every system and device in the installation meets these Specification and design requirements.

B. The Contractor shall devise, perform and document such field tests as are necessary to ensure the appropriate degree of quality for items manufactured or fabricated for use on the ATC system specified herein.

C. The Contractor shall devise, perform and document field installation inspections to ensure that all Train Control equipment and Interlocking equipment furnished in association with this Contract is installed, connected and adjusted in compliance with these Specifications.

D. The Contractor shall devise, perform and document such field tests as are required by the various Sections within these Specifications and Section 34 42 88 to ensure that

all Interlockings, wayside ATC systems, subsystems, and operating equipment, provided under this Contract, function in a safe and proper manner and as required by these Specifications.

E. The Contractor's Quality Assurance Manager shall ensure that the approved test procedures are on site and being executed per the requirements of the approved procedure. This information shall be conveyed to the Project Manager. The QA Manager shall initial and date any portion of the test data sheets witnessed during spot checks. The QA Manager shall stop testing activities if an approved copy of the test procedure is not on site and being utilized. Testing shall not resume until a stamped approved copy of the test procedure is on site.

1.04 SUBMITTALS

A. The Contractor shall, within 90 calendar days of Notice to Proceed, submit for approval of the Project Manager, the following:

1. A list called "Master List of Field Tests" which lists by number and describes the various field tests that the Contractor plans to perform in the field. This list may be all-inclusive providing references to tests not to be performed at certain locations or on the current Contract. The tests to be performed at each location shall, in some manner, be delineated.
2. Progress Schedules
   a. The Contractor shall include in the Progress Schedules a complete description of the testing to be provided under this Contract. The Progress Schedule shall delineate the order in which the various required field installation inspections and field tests are to be made and their durations. The Progress Schedules shall show how the Contractor plans to meet the installation and testing dates required by the Contract.
3. A list of all field tests to be performed at each location affected by this Contract.
   a. This list shall include the following items for each field test listed:
      1) List issue number
      2) Test procedure
      3) Current revision number of the test procedure
      4) Descriptive title of test
      5) Acceptance level of test
      6) Prerequisite tests and/or installation inspections required
      7) Remarks
      8) Date on which list was revised and reason.
   b. This list shall have a Project Manager approved distribution list which shall include all personnel deemed required by WMATA.
   c. This list shall be reissued following every list revision.

B. The Contractor shall, at least 60 calendar days prior to the scheduled performance of each test described herein, submit a detailed test procedure for the required tests which are outlined within these Specifications.

C. The Contractor shall record the results of each factory or field test as specified herein. The Contractor shall submit properly executed test documents for each prescribed test within not more than two weeks of completion of the individual tests. All test reports shall be checked and approved by the Contractor prior to submittal to the Project

Manager. The test report shall be all-inclusive, that is it shall contain all required data, reference drawings, explanations, and other information necessary to permit evaluation without the necessity of securing this information from other sources by those responsible for evaluating the test report. All superfluous data shall be so marked or eliminated from the test report prior to submittal. The test report shall be legible in its entirety. Test reports which do not meet the requirements as outlined in these paragraphs will be rejected.

D. Prior to the commencement of any test, the Contractor shall present a copy of the approved test procedure to the Project Manager who is to witness the test.

PART 2 - PRODUCTS

2.01 PRELIMINARY TEST AND INSPECTION REQUIREMENTS

A. The preliminary tests and inspections to be performed throughout the area of control of each Train Control Room shall include, but is not limited to the following tests:
1. Power distribution and alarms;
2. Grounding system;
3. Negative propulsion return system;
4. Proper wiring, both vital and non-vital;
5. Proper insulation for cable, running rails and equipment;
6. Track circuit equipment modules, both track-mounted and rack-mounted;
7. Track circuit adjustment, both audio frequency and power frequency;
8. Traffic and line circuits.

B. At locations where there is no interlocking equipment, Level A acceptance shall, as a minimum, consist of the preliminary tests only. The preliminary tests are:

#	Test #	Test
1	1.1	Power Racks, Energy Distribution and Failure Alarm Circuits
2	1.2	Breakdown Test of Vital Circuits and (where applicable) Interlocking Control Circuits
3	1.3	Breakdown Test of Non-Vital Circuits
4	1.5	ATP Track Module Test
5	1.11	Checkout of Impedance Bonds
6	1.14	Inspection and Test of Cable
7	1.15	Inspection and Test of Equipment Grounds
8	1.18	Test of Track Circuit Terminating Receivers (where applicable)
9	1.21	Test and Inspection of Negative Return Bonding
10	1.33	Test of Track and Alarm Indication Panels
11	2.1	Adjustment of ATP Track Modules
12	2.15	Operating Test of Line Circuits between Consecutive TC Rooms

C. Where an interlocking is included within the area controlled by a Train Control Room, tests of the following functions shall, as a minimum, be conducted in addition to the tests listed previously:
1. Track switch control and indication

2. Signal control and indication
3. Detector locking
4. Approach and/or time locking
5. Route locking
6. Derail operation (where applicable)
7. Wayside pushbutton box operation (where applicable)
8. Loop operation
9. Entrance-Exit control operation.
10. Slave module operation

D. At locations where there is an interlocking, Level A acceptance testing shall, as a minimum, include, in addition to the preliminary tests listed above, certain interlocking tests. These interlocking tests are:

#	Test #	Test
1	1.6	ATP Slave Module Checkout
2	1.12	Lamp Circuitry and Signal Performance
3	1.13	Wiring and Adjustments to Switch and Lock Movements
4	1.16	NOT USED (Wiring and Adjustments to Derail Layouts)
5	1.19	Checkout of Wayside Pushbutton Layouts (where applicable)
6	2.10	Interlocking Plant Vital Circuit Test
7	2.12	Inductive Track Loop Tests
8	2.13	Interlocking Plant Tests
9	2.24	Tests of 60-Hz, Single-Rail, AC Track Circuits

E. The area covered by these additional interlocking tests shall be the tracks within the interlocking limits and all tracks approaching the interlocking to and including the approach limits for each interlocking signal.

F. The Contractor shall ensure that the test procedures are in accordance with the existing WMATA test procedures:

1. Test 1.1 – Power Racks, Energy Distribution and Failure Alarm Circuits
   a. The purpose of this test is to determine whether energy at all required levels is available in the control room, and properly distributed to equipment requiring it, both in the field and in the control room.
   b. This test shall be made with all loads connected and shall prove that the voltage supplied to any module, device or appliance is within plus or minus 5 per-cent of its rated voltage when the module, device or appliance is operating at its maximum current and at its minimum current.
   c. This test shall be made after test 1.15 is completed and according to the Critical Path Testing Schedule.
   d. This test shall check that no grounds, shorts, open circuits, crosses or misplaced wiring exist in the power distribution system.
   e. All standby or reserve power circuitry and the Automatic Transfer Switch shall be checked both for completeness and specified operation.

f. All alarm circuits shall be tested by simulating power or equipment failure.

g. This test shall also include the following:
   1) Check AC Power sources for correct voltage levels, and, where necessary, for correct phasing.
   2) Check DC power supplies for correct voltage levels and correct polarity.
   3) Check transformer taps and adjust as necessary.
   4) Check and make operational all ground detectors.

h. Any malfunctions, lack of power, or blown fuses shall be reported for later correction and retesting.

2. Test 1.2 – Breakdown Test of Vital Circuits and (where applicable) Interlocking Control Circuits

a. All vital circuits shall be tested in their entirety for the correct operation of, and response to, each contact on each circuit element, such as relays and contactors. Where parallel paths exist, the tests shall validate each path, and circuits shall be opened to ensure the proper test.

b. Where parallel paths exist in a circuit, the circuit shall be checked to ensure that all such paths are energized from the same fuse.

c. Each circuit shall be tested by simulating all operating conditions to ensure that the circuit operates in accordance with the requirements of these Specifications and that it is implemented according to an up-to-date and approved copy of the circuit plans. This shall be done by removing contact terminals from plugboards starting at the positive (+) energy bus and henceforth, at each succeeding contact, checking to see that the end device reacts accordingly.

d. These tests shall also include the verification of correct current where resistors are used to reduce current.

e. These tests shall also include the checking of all tags and markings for their presence, legibility, and accuracy. Any discrepancy shall be tagged with a red tag fastened to the wire or device with string.

f. Wires used for temporary connections for these tests shall be of vividly contrasting color to the rack wire, or alternatively, these wires shall be identified by a green paper tag fastened to the wire with string. These wires shall be removed at the end of the tests.

g. Both ends of each wire shall be checked during these tests to be certain that their terminations are solidly applied and that they are properly held in their correct place. The corresponding line on an up-to-date set of approved plans shall be marked with green pencil to indicate the presence of continuity in each wire and that each wire is in its proper position and properly terminated.

h. This test shall be performed after tests 1.1 and 1.15 have been completed, and in accordance with the Critical Path Testing Schedule.

i. All circuit elements shall be checked in the breakdown test. This shall include, but not be limited to, relay test posts, pushbutton contacts, and switch machine control, energization and indication contacts in the Train Control Room. All terminations shall be checked to ensure that no extraneous connections exist.

j. A contrasting colored pencil (brown) shall be used to checkmark each circuit element connected by the circuit (on the set of plans included

with the test submittal) to indicate that each circuit element has been checked and that it is correct and in place as shown on the Contract Drawings. All coordinates for identifying apparatus locations shall be checked during this test.

k. Where applicable, these tests shall include the portions of the Vital Processor circuitry which are external to that unit.

3. Test 1.3 – Breakdown Test of Non-Vital Circuits

a. When all rack connections have been completed and all equipment is in place, the Contractor shall energize and test each non-vital circuit to determine that it meets the requirements of these Specifications and that it is implemented according to an up-to-date and approved copy of the circuit plans. The Blown Fuse Circuit shall be the first circuit to be tested.

b. Each circuit is checked for continuity, by first energizing the end device and then opening the circuit, contact by contact, from energy plus to energy minus. The corresponding circuit in the circuit plans shall be delineated with green pencil so that no wire, contact, coil, device or connection is overlooked.

c. Where the device being controlled is remote from the equipment being tested, a lamp, buzzer, or voltmeter shall be connected at the final terminal leading to that device. NOTE: If a buzzer or other vibrating contact device is used, its coil shall be properly suppressed to prevent transient damage to the equipment.

d. Paragraphs b, e, f and j of Test 1.2 shall also apply to this test.

e. This test shall be performed after Tests 1.1 and 1.15 have been successfully completed and in accordance with the Critical Path Testing Schedule.

4. Test 1.5 – ATC Track Module Test (See Section 34 42 53, ATC – Track Modules) The Contractor shall test each ATP (Automatic Train Protection) module in accordance with an approved test procedure consistent with the following Specifications:

a. This test shall be made at a time consistent with the Critical Path Testing Schedule after Tests 1.1, 1.2 and 1.15 have been successfully performed. This test shall be made with all field wiring disconnected, according to an up-to-date set of circuit plans and following an approved step-by-step test procedure.

b. The following items shall be checked, and the Contractor shall determine that:

1) Filters of the proper frequency are in place.

2) The unit has a track carrier generator of the proper frequency in place for the location.

3) Code rate generators with the proper coding rate are in place for the location.

4) The module for TWC (Train-To-Wayside Communications) is in place if required at the location.

5) All other components of the module are in place and properly positioned.

6) A suitable test fixture is connected to the output.

7) Power is present at the module, device or appliance and it is within plus or minus 5 percent of its nominal voltage rating with all loads connected, during operation.
8) The unit does not overheat when power is applied.
9) The proper current is being drawn from the power supply.
10) The proper carrier frequency is being generated and that it is within the tolerance designated by the manufacturer
11) The proper code rates are being generated and that they are within the tolerance designated by the manufacturer
12) A suitable test fixture is connected to the input and that the receiver gain is properly adjusted.
13) With the module connected to the test fixture, the track circuit is showing unoccupied.
14) With the module connected to the test fixture and track shunting simulated, the track circuit is showing occupied.

5. Test 1.6 – ATP Slave Module Checkout (See also Section 34 42 53, ATC – Track Modules).The Contractor shall test each ATP Slave Module in accordance with an approved test procedure consistent with the following Specifications:
   a. This test shall be made at a time consistent with the Critical Path Testing Schedule after tests 1.1, 1.2, 1.5 and 1.15 have been successfully completed.
   b. The following items shall be checked and the Contractor shall determine that:
      1) Filters of the proper frequency are in place.
      2) The unit has a track carrier generator of the proper frequency in place for the location.
      3) All other components of the module are in place and properly positioned.
      4) A suitable test fixture is connected to the output.
      5) Power is present at the module, device or appliance and it is within plus or minus 5 percent of its nominal voltage rating with all loads connected, during operation.
      6) The module does not overheat when power is applied
      7) Transmitted output has correct frequency for the location and is within the tolerance designated by the manufacturer
      8) Transmitter output responds to changes in code rate supplied from ATP transmitter or test fixture.
      9) Receiver input can be adjusted to be within the specified tolerance.
      10) Track circuit connections are complete, free from shorts and grounds, and the track circuit responds to simulated shunting of the track.

6. Test 1.11 – Checkout of Impedance Bonds (See also Section 34 42 62, ATC –Impedance Bond Layouts).The Contractor shall test all impedance bonds in accordance with a test procedure which the Contractor has prepared and which the Project Manager has approved. Each test shall produce a printed trace from a spectrum analyzer using a signal generator connected to the track

terminals in the TCR. The test shall be consistent with the following requirements:

a. This test shall be made at a time consistent with the Critical Path Testing Schedule and after tests 1.1, 1.2, 1.5, 1.6, 1.14, 1.15 and 1.21 have been successfully completed at that location.

b. The following items shall be checked and the Contractor shall determine that:

1) A frequency sweep test verifies that voltage peaks are present for all frequencies assigned to this location and that these peaks are within tolerance according to the manufacturer's approved specifications.

2) The impedance bond is connected to the correct ATP module.

3) With untuned bonds, (for which frequency sweep tests cannot be made) amplitude tests prove the correct connections are made and the bond is operable.

7. Test 1.12 – Lamp Circuitry and Signal Performance (See also Section 34 42 68, ATC – LED Signal Layouts).The Contractor shall test all signal layouts in accordance with a test procedure which the Contractor has prepared and which the Project Manager has approved. The test shall be consistent with the following requirements:

a. This test shall be made at a time consistent with the Critical Path Schedule and after tests 1.1, 1.2, 1.14 and 1.15 have been successfully completed at the location involved.

b. The following items shall be checked and the Contractor shall determine that:

1) The signal layout is wired according to the approved circuit design plans.

2) The signal is located according to the approved plans.

3) The signal displays the proper aspect for the signal control logic and has the correct lamp or LED assembly (where applicable) installed.

4) The signal is energized with the proper voltage and that this voltage does not vary beyond the range of +1 percent and -5 percent during normal power supply and load fluctuations. This voltage shall be recorded on the test data sheet.

5) The signal connections are checked for tightness, clearness and integrity.

6) The signal layout and all its components are tagged and marked according to Section 34 42 77, ATC – Tagging and Marking.

7) The performance of the signal beam is visually checked for intensity, alignment and sufficient beam width, to allow continuous viewing from an approaching train over the required upstream distance.

8. Test 1.13 – Wiring and Adjustments to Switch Machines (See also Section 34 42 54, Mainline Switch Machines and Section 34 42 99, Electrically Locked Derails.) The Contractor shall test all Switch Machines in accordance with a test procedure which the Contractor has prepared and which has been

approved by the Project Manager. The test shall be consistent with the following requirements:

a. This test shall be made at a time consistent with the Critical Path Testing Schedule and after tests 1.1, 1.2, 1.3, 1.14 and 1.15 have been successfully completed.

b. The following items shall be checked and the Contractor shall determine that:

1) The Switch Machine is properly placed, installed, lubricated, free of abnormal mechanical resistance, and wired and labeled according to the approved plans.

2) The Switch Machine is energized with the proper voltage, and that the voltage remains within a tolerance of plus or minus 5 percent of its nominal rating during operation of the movement.

3) That all internal and external mechanisms are in adjustment according to the manufacturer's instructions and meet all requirements of Sections 34 42 54 and 34 42 64.

4) The movement responds to a blocked point in the manner specified.

5) The movement draws the correct current at the voltage supplied as specified by the manufacturer.

6) The movement responds in the correct direction according to the control logic

7) The movement can be hand-cranked to both extreme positions and cannot be operated electrically with the crank in place.

8) The movement heater(s) are in place and are at the correct temperature.

9. Test 1.14 – Inspection and Test of Cable (See also Section 34 42 49, ATC Signal Wire and Cable).The Contractor shall test all cable in accordance with a test procedure the Contractor has prepared and which the Project Manager has approved. The test shall be consistent with the following requirements:

a. Appropriate tests shall be made before installation and after installation is complete, at times consistent with the Critical Path Test Schedule.

b. The following items shall be checked BEFORE INSTALLATION. The Contractor shall determine that, with the cable on the reel:

1) A visual inspection shows exterior of cable to be free from nicks, gouges, or any obvious damage insofar as the cable can be inspected.

2) Insulation resistance between all conductors and all conductors and shield, if any, meet the specified values.

3) The cable is of the type and configuration specified and shown on the plans and drawings.

4) Continuity for each conductor is satisfactory.

c. The following items shall be checked AFTER INSTALLATION is complete. The Contractor shall determine that:

1) A visual inspection of the exposed portion of the cable shows the exterior to be free of nicks, gouges or any obvious damage.
2) The cable is properly installed and supported in the correct location, and adequate slack has been provided to prevent strain on the terminations or abrasion to the cable.
3) The cable shows adequate insulation resistance (at least one megohm for 600V-class cable and at least 100 megohms for 1000V-class cable) to ground and between each conductor and all other conductors.
4) Cable of the proper size, voltage rating and type has been installed. (If substitution was necessary and was authorized and made, the plans shall show these changes.)

d. A proper tag has been installed on both cable wire, and the wires have been properly terminated and landed. (All drawings showing cable terminations shall be verified as to completeness and correctness of the cable terminations, and shall be submitted with the Test Report.)

10. Test 1.15 – Inspection and Test of Equipment Grounds (See also Section 34 42 22, ATC Lightning/Surge Protection and Grounding Systems) The Contractor shall inspect and test all equipment grounds in accordance with a test procedure which the Contractor has prepared and which the Project Manager has approved. The test shall be consistent with the following requirements:

a. This test shall be made as soon as the grounding system has been established, before testing of electronic equipment is started and according to the Critical Path Testing Schedule.

b. The following items shall be checked and the Contractor shall determine that:
1) The grounding systems called for in these Specifications or shown on the Contract Drawings are in place and correctly installed.
2) A visual inspection shows all ground connections tight, free of paint and suitably protected from physical damage and corrosion.
3) A visual inspection shows all ground leads to be properly sized (per Specifications), short, direct and free of bend radii less than six inches.
4) The dc resistance from TCR Prime Ground Bus has been tested and recorded by the use of an approved testing device, and it has been determined that the ground resistance between the bus and true ground is less than 15 ohms.
5) The dc resistance from each equipment ground connection to the TCR Prime Ground Bus has been checked and recorded, and it has been determined that the dc resistance is less than 0.01 ohms.
6) One path and only one path exists between the TCR Prime ground bus bar and ground. (Disconnecting the leads from

the bar to ground shall show a DC resistance from the bar to ground of over 100,000 ohms.)

7) The dc resistance between racks, cable trays or other pieces of equipment which are required to be insulated from each other and/or insulated from supporting framework is at least 100,000 ohms.

c. All ground wires are properly attached to the TCR Prime Ground Bus and properly labeled as to their origin.

11. Test 1.18 – Test of Track Circuit Terminating/Bridging Receivers (Where applicable) Also refer to Section 34 42 53, ATC – Track Modules. The Contractor shall test all Track Circuit Terminating/Bridging Receivers which may be included in the ATC system, in accordance with a test procedure which the Contractor has prepared and which has been approved by the Project Manager. The test shall be consistent with the following requirements:

a. The test shall be made at a time consistent with the Critical Path Testing Schedule and after tests 1.1, 1.2, 1.5, 1.14 and 1.15 have been successfully completed at that location.

b. The following items shall be checked and the Contractor shall determine that:

1) The Terminating/Bridging Receiver is located and installed according to the approved plans.

2) The associated track module transmitter is operating and adjusted according to test procedure 1.5.

3) The correct bandpass filter for the location is installed.

4) The gain is properly adjusted according to the approved test procedure, utilizing a special test fixture if necessary to obtain adjustment.

5) If the location requires a second parallel connected receiver, the test procedure nevertheless still allows proper gain adjustment of both units.

6) The approved test data sheets, properly filled in, have been submitted. (A separate special data sheet shall be prepared for each module configuration, and it shall show the limits of acceptance performance for each reading.)

7) The track circuit shows occupied or unoccupied properly when its track is shunted or unshunted, as specified within these Specifications.

12. Test 1.19 – Checkout of Wayside Pushbutton Boxes (Where applicable). Refer to Section 34 42 66, ATC – Wayside Pushbutton Layouts. The Contractor shall test all wayside pushbutton boxes in accordance with a test procedure which the Contractor has prepared and which the Project Manager has approved. The test shall be consistent with the following requirements:

a. The test shall be made at a time consistent with the Critical Path Testing Schedule and after tests 1.1, 1.2, 1.3, 1.14 and 1.15 have been successfully completed at that location.

b. The following items shall be checked and the Contractor shall determine that:

1) The pushbutton layout is located and installed according to the approved plans.

2) Where indicating lamps are included in the pushbutton box, each lamp lights only when the appropriate circuit is energized in the Train Control Room.
3) Each pushbutton control circuit in the TCR becomes energized (or for some circuits, de-energized) only when its corresponding pushbutton is pushed.

13. Test 1.21 – Test and Inspection of Negative Return Bonding (See also Section 34 42 65, ATC – Track Bonding Layouts).The Contractor shall test each Negative Return Bond (including impedance bond, shunt bar and crossbonding connections) in accordance with test procedures which the Contractor has prepared and which the Project Manager has approved. The tests shall be consistent with the following requirements:
   a. Before any bonding has been installed, the Contractor shall verify that all insulated joints have been correctly located, correctly installed and that their resistance when tested by the Authority's approved method is above 5000 ohms. If any discrepancy is found in the insulated joint, the Authority shall be notified and the bonding of that section shall be postponed.
   b. The remaining tests shall be made after all the bonds and negative return equipment have been installed at a particular location, and according to the Critical Path Testing Schedule.
   c. The following items shall be checked and the Contractor shall determine that:
      1) Each bond has been installed in the correct location according to these Specifications and that all bonds necessary to ensure an uninterrupted low resistance path for the negative return current are in place.
      2) Any hardware associated with bonding shall be tightened with the proper torque according to the approved procedure.
      3) Each bond has been tested by the Null Balance method.
      4) The resistance of each bond has been measured and does not exceed the maximum acceptable ohmic value (for its configuration and bond length) which has been approved by the Project Manager.

14. Test 1.33 – Test of Track and Alarm Indication Panels (See also Section 34 42 55, Track and Alarm Indication Panels).The Contractor shall test all Track and Alarm Indication Panels in accordance with a test procedure which the Contractor has prepared and which has been approved by the Project Manager. The test shall be consistent with the following requirements:
   a. This test shall be made only after all of the installation work in the TCR is essentially complete. It shall be made at a time consistent with the Critical Path Testing Schedule and after tests 1.1, 1.2 and 1.3 have been successfully completed.
   b. The following items shall be checked and the Contractor shall determine that:
      1) The track circuit occupancy and alarm indication designation labels are correct and inserted at the appropriate locations.
      2) Each visual Track Occupancy indication is activated by manually dropping the associated track circuit

3) All NORMAL and REVERSE Traffic indications function properly and display the specified indication color.
4) All Blown-Fuse indications function properly for every fuse.
5) All Ground Detector and Transfer Panel indications function properly.
6) All Power Failure and Power Off indications function properly.
7) Where applicable, all Snowmelter Problem and Snowmelter Failure indications function properly.
8) Where applicable, the Non-Vital Interlocking Problem indication(s) function properly.
9) Where applicable, all processor health and status indications function properly.
10) Where applicable, all processor failure indications function properly.
11) All spare and unused alarm indication inputs are capable of correct operation.
12) The audible alarm functions as specified for each alarm tested.

15. Test 2.1 – Adjustment of ATP Track Modules (See also Section 34 42 53, ATC – Track Modules).The Contractor shall test and adjust each ATC track module, both at the factory and after installation in the field, in accordance with a testing procedure which the Contractor has prepared and which the Project Manager has approved. The tests shall be consistent with the following requirements:
   a. The field tests shall be made after all the necessary equipment has been correctly installed; after the successful completion of test 1.11 and, if applicable, test 1.18, and all of their prerequisite tests, and; in accordance with the Critical Path Testing Schedule.
   b. The field tests shall be made according to the approved test procedures and shall determine that:
      1) The track module is complete and properly installed according to the Specifications.
      2) The track module is drawing the correct current from the power supply. This current shall be read and recorded during track and train transmission, after track and train power levels have been set.
      3) The output power level is properly adjusted according to the manufacturer's approved instructions.
      4) At maximum power, a transmitted track signal does not produce a crosstalk signal to any other track module. Crosstalk shall be tested by observing all track receivers and by measuring the signal on all cables at the entrance to the TCR.
      5) The proper output to the track relay or corresponding vital input is present and picked up on the correct current and with the correct polarity.
      6) When a 0.06 ohm shunt is placed across the track at the middle of the track circuit the corresponding track circuit drops. The track circuit also drops when a 0.06 ohm shunt is placed across the track 10 feet from the transmitting bond or Mini-Loop, on the inside of the track circuit and when a 0.06

ohm shunt is placed 10 feet from the receiving bond, on the inside of the track circuit being tested. At interlockings, verification of the appropriate track circuit dropping with a 0.06 ohm shunt placed across the switch points is also required.

7) The input sensitivity of the receiver amplifier is correctly adjusted according to the manufacturer's approved procedure for the configuration of the track installation being tested. (A separate set of instructions shall be available for every configuration.)

8) Each receiver filter shall be checked during field testing to determine that the ringing (fill-in), during the "off time" of the track frequency cycle is less than the maximum level established during the type acceptance testing. Filters which do not meet this requirement shall be rejected and shall not be furnished or installed under this Contract.

9) The train frequency is correct and its voltage is adjusted according to the manufacturer's approved procedure.

10) The coupling transformer or series resistor (if any) is properly adjusted according to the manufacturer's procedure.

11) The signal-to-noise ratio on any pair of leads is not less than 10:1.

12) Data taken in this test has been recorded as part of a permanent log located in each Train Control Room. (This log shall be kept for use by the Authority for ongoing maintenance.)

13) The cross-talk on any pair of leads is below a level corresponding to a signal-to-noise ratio of 10:1. (This test shall be made with all transmitters in operation except the one under test.)

16. Test 2.10 – Interlocking Plant Vital Circuit Test (See also Sections 34 42 28, 34 42 43, 34 42 53, 34 42 54, 34 42 61, 34 42 63, and 34 42 65).The Contractor shall perform a dynamic test of each of the vital interlocking circuits at each location. This test shall prove by actual visual observation of all interlocking relays, switches, and signals, that the vital circuits enforce the rules of safe interlocking of signals, track switches, and track occupancy.

a. The Contractor shall delineate in the test procedure the intended purpose of each circuit contact break or program routine as it is listed. This test procedure shall be prepared by the Contractor and approved by the Project Manager before testing may begin.

b. The test shall be conducted in conformance with the approved test procedure and shall check that each and every circuit contact break or program routine performs the function intended, and does not perform or allow any function which could result in an unsafe situation.

c. This test shall be made only after all of the vital equipment at a location has been installed, after tests 1.6, 1.12, 1.13, 1.18, 1.21 and 2.24 have been successfully completed, and in accordance with the Critical Path Testing Schedule.

d. The vital circuit test procedure shall be complete and shall be consistent with all of the following considerations. The Contractor shall determine for every possible route in the interlocking, that:
   1) When a signal is cleared for a given route, all track switches along that route and all potentially conflicting routes are properly positioned and locked, and no signals governing conflicting routes can be cleared.
   2) When any track circuit within the interlocking is occupied, all switches previously locked by a cleared signal remain locked, and no signal can be cleared over that or conflicting routes.
   3) No switch can be operated if its track circuit is occupied.
   4) With a train occupying the approach to a given signal, once that signal is cleared, no other signal can be cleared over a conflicting route until the first signal is put to stop and a suitable time period expires.
   5) With a train occupying the approach to a given signal, once that signal is cleared, no switch along that or conflicting routes can be moved until the signal is put to stop and a suitable time period expires.
   6) No signal can be cleared over a locked route, a route conflicting with a locked route, a route with an occupied track circuit or a route with an unexpired time period.
   7) No subsequent call for a signal or switch movement over any part of a locked route can be stored so long as the route remains locked.

e. WARNING: The Contractor shall take every precaution to see that no vital interlocking circuit is compromised as a result of these tests. All temporary test jumpers, programs or devices of any kind shall be removed at the conclusion of the testing and all wiring, programs and equipment shall be restored to their proper operating condition. The use of high visibility tagging on any such wire or device, or where any wire is removed, is mandatory.

17. Test 2.12 – Inductive Track Loop Tests (See also Section 34 42 61, ATC – Audio Frequency Track and Single Turn Loop Circuit Layouts) The Contractor shall test all Inductive Track Loops in accordance with a test procedure which the Contractor has prepared and which the Engineer has approved. The test shall be consistent with the following requirements:

a. This test shall be made after all the loops, bridging receivers, shunt bars and impedance bonds at a given location are in place according to the plans, and the installation, insofar as the loops may be affected, is complete. It shall also be made at a time consistent with the Critical Path Testing Schedule, and after test 2.1 and all its prerequisite tests have been successfully completed.

b. The following items shall be checked and the Contractor shall determine that:
   1) The transmitter power level adjustments for all the loop and track transmitters at the location under test (made in the 2.1 test procedure) are still correct.
   2) For progressive placements of a shorted shunt strap, the track and loop currents of the route selected are present and within

tolerance. (The Contractor shall describe in the test procedure the correct locations for shunt strap and current measurements for all track circuits and loops along every legitimate route.)

3) When tests are made with shorted shunt straps, correct sequencing of the strap application and removal is observed.

4) For any given strap placement, only the correct loops are active and the remainder are de-energized. The values of the measured current in both the energized (active) and the nominally de-energized track circuits shall be recorded on the test data sheet where the acceptable range of values is shown.

18. Test 2.13 – Interlocking Plant Tests (See also Section 34 42 61, ATC – Audio Frequency Track and Loop Circuit Layouts) The Contractor shall test the interlocking plant equipment in accordance with a procedure which the Contractor has prepared and the Project Manager has approved. The procedure shall cover field testing and final operating tests. The test procedure shall be consistent with the following requirements:

a. The field test shall be made after all the associated equipment at the location of the test is completely installed and in apparent working order. It shall be made at a time consistent with the Critical Path Testing Schedule and after tests 1.19, 2.10, 2.12, 2.24 and all their prerequisite tests have been successfully completed. Note that for certain locations where approach locking extends beyond the limits of the room under test, the portion of test procedure 2.15 dealing with these approach locking circuits shall also be considered a prerequisite.

b. The test procedures shall be designed to prove safe and proper operation of the interlockings. The test sequence shall be designed to test each function for correct performance in accordance with the Contract Specifications. Furthermore, the test sequence shall include simulated unusual conditions to determine that the interlocking circuits will respond to these in a safe and desirable way. The functions to be tested shall include, but not be limited to, the following:

1) Signal indication locking
2) Approach locking
3) Traffic locking
4) Route locking
5) Time locking
6) Switch indications
7) Signal indications
8) Locking indications
9) Occupancy indications
10) Route indications

c. The operational test shall be designed to offer PROOF that the system will perform as specified to provide fail-safe operation of trains. During this test, each and every possible route shall be tested to determine that, at the appropriate time in the interlocking operation sequence:

1) The route is effectively secured.

2) Control panel indicators are correct and present a true picture of locking, switch position, signal aspect and track occupancy conditions at the interlocking.
3) All switches are locked in position and cannot be moved electrically by any controls.
4) All conflicting signals are locked in their stop aspect and cannot be cleared by any controls.
5) The route is released correctly, and sectionally where required, by occupancy (followed by unoccupancy in some cases) of the specified track circuits, and no conflicting switch movement or signal clearing is possible until passage of the train.
6) "Preconditioning" cannot be set up by any panel manipulation, train movement or combination thereof. "Preconditioning" shall be understood to be the storage of a control or panel manipulation which will cause the clearing of a route or movement of a switch at some later time as the result of a timer operation or train movement.
7) Time locking is operating properly and timers are set to correct times.
8) Coded speed commands are correct.
9) At an interlocking with a crossover move aligned all coded speed commands from the interlocking are cut off in the event a train passes a stop aspect signal, and any cleared signal at that interlocking is put to stop.
10) That wayside pushbuttons and associated indications (at locations so equipped) work properly and conflicting or erroneous routes cannot be set up.
11) That Fleeting and Automatic Route Selection (at locations so equipped) operate safely and according to the Specifications.

19. Test 2.15 – Operating Test of Line Circuits between Successive Train Control Rooms. The Contractor shall make an operating test of the line circuits between all consecutive Train Control Rooms, and between Train Control Rooms for consecutive interlocking locations. This test shall be performed in accordance with a test procedure which the Contractor has prepared and which has been approved by the Engineer. The test shall be consistent with the following requirements:
   a. This test shall be made: after all equipment installations at the applicable consecutive interlockings have been completed; after test 2.13 and all its prerequisite tests have been successfully completed at both interlocking locations; after all preliminary tests have been successfully completed at all intermediate locations, and; in accordance with the Critical Path Testing Schedule.
   b. The following items shall be checked and the Contractor shall determine that, for the successive interlocking involved:
      1) A route can be established on each track between successive interlocking locations, but for only one direction at a time, not both directions simultaneously.
      2) When a route is established on a track between two successive interlockings: the correct indications at both

interlocking locations are energized; no conflicting route from either location can be established, and; no opposing signals can be cleared.

3) Attempts to clear all opposing signals have no effect on a previously cleared signal.
4) Route locking for each route releases in the manner specified after canceling a cleared signal or acceptance of the route.
5) All track circuits between the interlockings are effective in their operation on the traffic circuitry.
6) When intermediate locations exist on the track section between interlockings, the traffic circuitry is properly selected and affected by the track circuits at these locations.
7) Loss-of-shunt timers (where required) are adjusted to correct time settings, and are operating properly.
8) The control of approach locking logic has not been selected which would cause unnecessary timer operations.

20. Test 2.24 – Testing 60 Hz, Single Rail, AC Track Circuits(See also Section 34 42 63, ATC – Power Frequency Track Circuit Layouts).The Contractor shall test each 60 Hz Single Rail AC Track Circuit in accordance with a test procedure which the Contractor has prepared and which the Project Manager has approved. The test shall be consistent with the following requirements:
    a. This test shall be made after the installation is complete, after tests 1.1, 1.2, 1.14, 1.15 and 1.21 have been successfully completed, and in accordance with the Critical Path Testing Schedule.
    b. The following items shall be checked and the Contractor shall determine that:
        1) The feed-end resistor has been adjusted to its correct value.
        2) The track voltage has been adjusted to the proper level according to the track circuit length.
        3) The relay-end resistor has been adjusted to its correct value.
        4) When a 0.06 ohm shunt is placed across the track, the corresponding relay drops.
        5) The relay drops whether the 0.06 ohm shunt is placed at feed end, relay end, or, in turnouts, across insulated joints.

PART 3 - EXECUTION

3.01 FIELD TESTS

A. The Contractor shall perform in the field all tests required to ensure the proper and safe operation of interlocking equipment to prove the adequacy and acceptability of the total interlocking operations. The tests to be performed shall cause each system and subsystem to be sequenced through its required operations, including the imposition of simulated conditions to prove that the installation complies with all specified fail-safe requirements.

B. Contractor Responsibility
    1. The Contractor shall develop computerized spread sheets or data bases to track all field tests and test results. Copies of all software used which is not already in use by the Project Manager shall be delivered to the Project

Manager along with the computerized data sheets prior to commencement of testing.

2. The Contractor shall provide equipment and apparatus required for the tests and shall disconnect and reconnect any connections necessary in performing the tests.
3. For each test crew, the Contractor shall provide a notebook-style computer capable of running the programs used for test result tracking by the Project Manager. These computers will remain in the possession of the Project Manager until the review of test data is complete.
4. Wherever practicable, Test Data sheets shall be computer-generated printouts by the Contractor. The Data Sheets will be checked and, if acceptable, signed by the Project Manager. Copies of the completed test data shall be submitted by the Contractor as an electronic copy along with the signed hard copy.

C. Only those field tests which are conducted and documented by the Contractor after the Project Manager has notified the Contractor that the installations are acceptable will be considered valid tests and be accepted for review by the Project Manager.

D. All field tests and procedures will be subject to the approval of the Project Manager. The Project Manager will have the right to witness any or all field tests conducted. The Contractor shall notify the Project Manager in writing at least 48 hours prior to each test.

E. Following the completion of each field test, the test results, data sheets and other required records shall be furnished to the Project Manager. Where the ATC or interlocking function behavior did not comply with the Specifications, the remedial action taken by the Contractor shall be recorded and included with the test results.

F. The Contractor shall resolve all field test discrepancies in accordance with applicable sections of the Contract Documents

1. Upon discovery of each discrepancy, the Contractor shall describe the discrepancy on the data sheet form which the Contractor has provided for that purpose.
2. If the discrepancy is due to an error in field wiring and connections which do not agree with the approved circuit plans, the Contractor may correct such errors without prior approval of the Project Manager.
3. If the test discrepancy is due to an error in the approved circuit, the Contractor shall not make any changes which affect safety of operation of the approved circuits, as designed, without prior approval of the Project Manager.
4. The Contractor shall retest the affected portions of each discrepancy the Contractor has corrected.
5. The retest shall be documented by the Contractor in the manner prescribed in these Specifications.
6. Whenever a resolution to the discrepancy is not available at the conclusion of the test, the Contractor shall describe the follow-on action required and list responsibility for such action in the initial field test report.

G. The Project Manager will make all final determinations as to whether only a part, or the whole test, shall be re-run when any specific field test does not meet the requirements specified for the test.

3.02 MEASUREMENT FOR PARTIAL PAYMENTS

A. The following items will be measured for partial payments as part of train control system function testing and interlocking testing at each location to be tested:

1. Master List of all Field Tests required under this Contract, and detailed Field Test Procedures for all such required tests.
2. Submission of all Test Reports corresponding to related tests identified within these Specifications

END OF SECTION

SECTION 34 42 83

ATC – TRAIN SEPARATION TESTS (LEVEL B)

PART 1 - GENERAL

1.01 SECTION INCLUDES

A. This Section specifies the criteria for the field tests and inspections which the Contractor shall develop and conduct in order to prove that the wayside ATC system is capable of providing safe automatic train operation within the areas controlled by TCRs included under this Contract.

1.02 RELATED SECTIONS:

A. Related work specified elsewhere shall include, but not be limited to. The following Sections:

1.	Division 01	General Requirements
2.	Section 34 42 04	Current Automatic Train Control System
3.	Section 34 42 28	ATC – Vital Functions
4.	Section 34 42 41	Basic ATC Electrical and Electronic Components Requirements
5.	Section 34 42 81	Basic ATC Test and Inspection Requirements
6.	Section 34 42 82	ATC – Preliminary and Interlocking Tests (Level A)
7.	Section 34 42 84	ATC – ATO and Local ATS Tests (Level C)

1.03 QUALITY ASSURANCE

A. The Contractor shall devise, perform and document such field tests as are necessary to ensure the appropriate degree of quality for items manufactured or fabricated for use on the ATC system specified herein.

B. The Contractor shall devise, perform and document such field tests as are required by the various Sections within these Specifications and Sections 34 42 81, Section 34 42 82 and Section 34 42 88 to ensure that the wayside ATC system is capable of providing safe automatic train operation as required by these Specifications.

C. The Contractor's Quality Assurance Manager shall ensure that the approved test procedures are on site and being executed per the requirements of the approved procedure. This information shall be conveyed to the Project Manager. The QA Manager shall initial and date any portion of the test data sheets witnessed during spot checks. The QA Manager shall stop testing activities if an approved copy of the test procedure is not on site and being utilized. Testing shall not resume until a stamped approved copy of the test procedure is on site.

1.04 SUBMITTALS

A. The Contractor shall, at least 60 calendar days prior to the scheduled performance of each test described herein, submit a detailed test procedure, to the Project Manager for approval for each of the tests outlined in Part 2 of these Specifications.

B. The Contractor shall submit for approval by the Project Manager any deliverables outlined within Section 34 42 81, where an ATC system is newly installed or modified at a TCR location as part of this Contract.

C. The Contractor shall record the results of each field test as specified herein. The Contractor shall submit properly executed test documents for each prescribed test within not more than two weeks of completion of the individual tests. All test reports shall be checked and approved by the Contractor prior to submittal to the Project Manager. The test report shall be all-inclusive, that is it shall contain all required data, reference drawings, explanations, and other information necessary to permit evaluation without the necessity of securing this information from other sources by those responsible for evaluating the test report. All superfluous data shall be so marked or eliminated from the test report prior to submittal. The test report shall be legible in its entirety. Test reports which do not meet the requirements as outlined in these paragraphs will be rejected.

D. Prior to the commencement of any test, the Contractor shall present a copy of the approved test procedure to the Project Manager who is to witness the test.

E. The Contractor shall submit Safe Braking Distance (Test 2.21) data as per Drawing ST-ATC-GEN-004 electronically in "EXCEL" format. The Contractor shall also submit a printed copy of the Test form as a pre-printed data sheet, for each route track segment to be tested.

PART 2 - PRODUCTS

2.01 TESTING REQUIREMENTS

A. The basic functions which shall be tested include:
1. Speed command logic;
2. Wayside/car detection, protection and speed commands;
3. Track shunting;
4. Block design control line verification
5. Safe braking distance enforcement.
6. Programmed stop

B. Level B acceptance shall, as a minimum, consist of the following train separation tests:

#	Test #	Test
1	1.23	Verification of Speed Command Logic
2	2.4	Testing of Programmed Stop
3	2.17	Wayside/Car Interface Checkout (Level B)
4	2.20	Wayside Train Detection and Protection Tests
5	2.21	Safe Braking Distance Tests
6	1.35	Inspection and Testing of the IDW System
7	2.8	IDW Local Test

C. The Contractor shall provide sufficient test equipment to perform simultaneous testing on at least two trains for the time consuming test procedures: WTP 2.20 (Part I), WTP 2.21 and 2.18 (in Level C).

D. The area covered by these tests shall be all tracks within the control limits of each TCR included under this Contract.

E. The Contractor shall ensure that the test procedures are in accordance with the existing WMATA test procedures:

1. Test 1.23 – Verification of Speed Command Logic. The Contractor shall test the speed command logic circuits in accordance with a test procedure which the Contractor has prepared and which has been approved by the Project Manager. The test shall adhere to the following requirements:
   a. This test shall be made at a time consistent with the Critical Path Test Schedule and after Level A Preliminary Test 2.1, 1.18 (when applicable) and all of their prerequisite tests have been successfully completed.
   b. The following items shall be verified and the Contractor shall determine that:
   1) With test equipment (fixtures) set up, all possible routes exhibit the proper speed commands for all possible occupancies (or combinations of occupancies).
   2) Track frequencies and code rates correspond to the values shown on the Contract Drawings and the values are duly recorded on the test data sheets or checked off on the control line diagram in the Contract Drawings.
   3) Each of the above measured values is within tolerance as compared to maximum and minimum values defined in the test procedure.
   4) The speed commands are affected properly with the application of temporary speed restrictions.
   5) The presence of temporary speed restrictions is properly conveyed to the DTS
   6) Relay contacts have been wired in accordance with WMATA relay contact assignment rules wherever such rules are applicable.

2. Test 2.4 – Testing of Program Stop. The test shall verify the Program Stop logic and circuitry. The test shall adhere to the following requirements:
   a. This test shall be made at a time consistent with the critical path test schedule and after Tests 1.4 and 1.7, and all their prerequisite tests have been successfully completed.
   b. The following items shall be checked and determine that:
      1) Utilizing the proper test equipment connected to the DTS, the SKSS, NSKS, PTP, PTPS variables can be manually sequenced to verify these circuits.
      2) Utilizing the test fixture, the correct logic outputs true for the various train lengths.
      3) The controls to the variable markers are operating correctly.

3. Test 2.17 – Wayside/Car Interface Checkout. The Contractor shall verify the proper operation of the Wayside/Car Interface with a dynamic train test which is in accordance with a test procedure which the Contractor has prepared and which has been approved by the Project Manager. Radio communication links between the train and wayside shall be operational for this test. The test shall verify the

communication links and the operation of the ATP and TWC systems. The test shall adhere to the following requirements:

a. This test shall be made at a time consistent with the Critical Path Test Schedule and after Level B Tests 2.4 and 1.23, and all their prerequisite tests have been successfully completed, but before Test 2.20 has been performed. The transit cars used in this test must constitute a Contractually "Valid" train with all carborne ATC systems operating properly.

b. The following items shall be checked and the Contractor shall verify that:

1) For every possible route, in both normal and reverse running directions, the speed command information is received aboard the train from every track circuit and loop with no dropouts.

2) The TWC system is operating correctly and according to the requirements of these Specifications.

3) For every possible route, in both normal and reverse running directions, valid communication occurs with respect to each applicable Flyby Receiver and Flyby Transmitter.

4) As the above specified information is verified, the data sheets are properly filled out.

4. Test 2.20 – Wayside Train Detection and Protection Tests. The Contractor shall verify the performance of the equipment tested under the four parts of this test procedure. These four parts are;

a. Part I - ATP Signal Level Test;
b. Part II - Post-Shunt and Pre-Shunt Tests;
c. Part III - Control Line Verification Tests and
d. Part IV - Signal Sighting, Slotting and Clearing Tests.

The test of these four parts shall adhere to the following requirements:

a. The test of each part shall be made at a time consistent with the Critical Path Test Schedule and after Tests 1.23 and 2.15, and all their prerequisite tests have been successfully completed. The transit cars used in this test must constitute a Contractually "Valid" train with all carborne ATC systems operating properly.

b. The following items shall be checked and the Contractor shall determine that for every track circuit in both directions:

1) In Part I – (Utilizing one train)

a) The level of both carriers of the ATP signal received aboard the car is measured and recorded, and is within the maximum and minimum tolerance values shown on the data sheet

b) A recording of both carrier levels (where existent) is made for each ATP circuit.

2) In Part II – (Utilizing one train)

a) The distance of the front wheels of the train from each track circuit boundary which the train is approaching at the time the track relay drops, has been measured and recorded on the data sheet under "pre-shunt" and that distance is within the

specified tolerance zone of 20 to 40 feet. (50 to 70 feet when transmitter and receiver are in different TCRs.)

b) The distance of the rear wheels of the train from each track circuit boundary which the train is leaving at the time the track relay picks up, is measured and recorded on the test data sheet under "post-shunt," and that distance is within the specified tolerance zone of 20 to 40 feet. (50 to 70 feet when transmitter and receiver are in different TCRs.)

3) In Part III – The Contractor shall devise tests to perform control line verification tests without the use of trains. The Contractor shall ensure that:

a) Successive speed commands are checked and noted based on a sequence of simulated track circuit occupancies and the established traffic direction. These tests shall also confirm that trains configured for the opposite travel direction to the established traffic direction would not receive speed commands.

b) The devised test shall be conducted for every route in approach to an “occupied” track circuit for each traffic direction, on every track circuit affected by this Contract.

4) In Part IV – (Utilizing one train)

a) As the train approaches a signal set to stop, the speed command observed aboard the train reduces progressively to zero.

b) When signal of (a) is then cleared, the speed command observed aboard the train then becomes the maximum authorized speed.

c) For a turnback move (turnback signal at stop), as the train approaches the signal location, the observed speed command reduces progressively to zero, once the rear of the train is clear of the interlocking.

d) When the turnback signal is then cleared (manually) the speed command aboard the train then becomes the maximum authorized speed.

e) Signals are properly aligned and offer an unobserved view from the train operator's position.

5. Test 2.21 – Safe Braking Distance Tests

a. The Contractor shall perform tests to verify that the Safe Braking Distances provided by his block design and equipment arrangement meet the requirements of these Specifications. Only the shortest braking distance at a specified speed need be tested. These shortest braking distances shall determine which bonds are to be

tested in each direction of traffic. Before beginning these tests the Contractor shall prepare:

1) Control line diagrams for the area to be tested clearly marked to indicate both the bonds required to be tested (target bonds) and the speed at which each target bond is to be tested.
2) Data sheets with all data columns derived from the block design already filled in. (See Part 1.04)

b. Test documents shall be submitted for review by the Project Manager at least 60 working days before the tests begin. These documents shall be included in the data package for the tests.

c. The test shall be consistent with the following requirements:

1) The test shall be made at a time consistent with the Critical Path Test Schedule and after propulsion power is available.
2) The transit cars used in this test must constitute a contractually "Valid" two-car train, with all carborne ATC systems operating properly and with the following modifications made by the Authority:
    a) The full service brake rate will have been modified to select only brake rate "B2", i.e., 1.65 mphps with a tolerance of plus 0.1 mphps minus nothing.
    b) The power removal time will have been adjusted or a uniform delay at all speeds of 0.09 Sec.

d. The following items shall be checked utilizing the data sheet format shown in the Contract Drawings and a train with a known ability to correctly measure distance. (The wheel wear switches must be correctly adjusted so that the car correctly measures distance and this distance must be verified and recorded before each day's testing.) The Contractor shall determine that:

1) With the train operating automatically at or slightly above the test speed for the location being checked, and with the train speed test equipment on; when the train passes the target bond at the start of the test section the train maintains its speed for the reaction distance (determined from the block design), then removes power and brakes to a stop with a minimum of 10 feet remaining to the overrun bond at the end of the test section. (The test shall include a remaining distance allowance to accommodate 8 car trains if they require more stopping distance as determined by the block design.) If the train is unable to reach the desired test speed, three runs shall be made and the data sheet so marked.
2) The distance from the actual stopping point (front end of train) to the end of block (overrun bond) has been measured and recorded on the data sheet and is within limits.
3) The test has been conducted in the required direction for every target bond within the area under test.
4) The data sheet shows the maximum speed within the block, the stopping distance and time, and the distance to the overrun bond for every test.
5) The data sheet shows that each run complies with (or does not comply with) the block design for distance readings, overrun distance, speed and brake rate.

6. Test 1.35 – Inspection and Testing of the IDW System - The IDW System equipment shall be inspected and tested in accordance with a test procedure which has been

prepared and which has been approved. The test shall adhere to the following requirements:

a. This test shall be made at a time consistent with the critical path test schedule and after Level A Preliminary WTP 1.14 and all prerequisite tests have been successfully completed.

b. The following items shall be checked and determine that:

1) All wayside equipment is installed properly in accordance with Section 34 42 57, Intrusion Detection Warning System.

7. Test 2.8 – IDW Local Test – The IDW Local System shall be tested in accordance with a test procedure which has been prepared and which has been approved. The test shall be consistent with the following requirements:

a. The test shall be made at a time consistent with the critical path test schedule and after WTP 1.5 and all prerequisite tests have been successfully completed.

PART 3 - EXECUTION

3.01 TESTING

A. The Contractor shall perform all field tests required to ensure the proper train separation as identified within these Specifications and within the Related Sections of these Specifications.

B. All field tests and procedures will be subject to the approval of the Project Manager. The Project Manager will have the right to witness any or all field tests conducted.

C. Following the completion of each field test, the test results, data sheets and other required records shall be submitted to the Project Manager. Where the desired ATC functionality did not comply with the Specifications required for proper ATC operation, the remedial action taken by the Contractor shall be recorded and included with the test results.

D. The Contractor shall resolve all field test discrepancies in accordance with applicable sections of the Contract Documents

1. Upon discovery of each discrepancy, the Contractor shall describe the discrepancy on the data sheet form which the Contractor has provided for that purpose.
2. If the discrepancy is due to an error in installation or implementation which do not agree with the approved circuit plan or design, the Contractor may correct such errors without prior approval of the Project Manager.
3. If the test discrepancy is due to an error in the approved ATC function specific wiring diagram, the Contractor shall not make any changes which affect the ATC operation, as designed, without prior approval of the Project Manager.
4. The Contractor shall retest the affected portions of each discrepancy the Contractor has corrected.
5. The retest shall be documented by the Contractor in the manner prescribed in these Specifications.
6. Whenever a resolution to the discrepancy is not available at the conclusion of the test, the Contractor shall describe the follow-on action required and list responsibility for such action in the initial field test report.

E. The Project Manager will make all final determinations as to whether only a part, or the whole test, shall be re-run when any specific field test is not considered satisfactory for ATC operation as determined by the Project Manager.

3.02 MEASUREMENT FOR PARTIAL PAYMENTS

A. The following items will be measured for partial payments as part of Train Separation testing at each location to be tested:
   1. The list of all field tests required under this Contract and detailed Field Test Procedures for all such required tests.
   2. Submission of all Test Reports corresponding to related tests identified within these Specifications

END OF SECTION

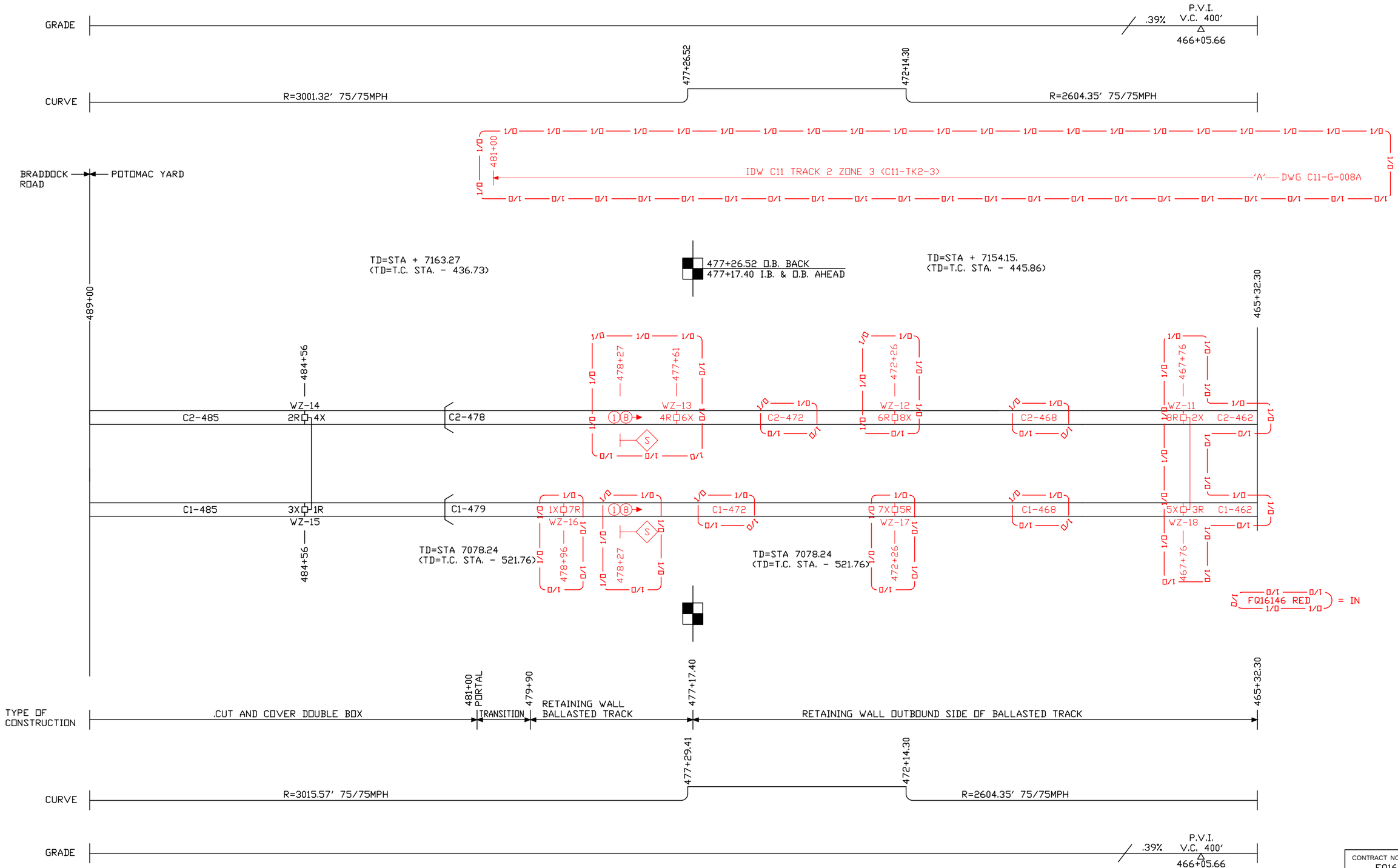

CONTRACT NO. FQ16146

DESIGNED	ACC	09/21/16 DATE
DRAWN	DMR	09/21/16 DATE
CHECKED		DATE
APPROVED		DATE

REFERENCE DRAWINGS

NUMBER	DESCRIPTION

REVISIONS

DATE	BY	DESCRIPTION
04/27/17	MM	POTOMAC YARD STATION FQ16146

WASHINGTON METROPOLITAN AREA TRANSIT AUTHORITY

DEPARTMENT OF TRANSIT INFRASTRUCTURE AND ENGINEERING SERVICES
OFFICE OF THE CHIEF ENGINEER, INFRASTRUCTURE

SUBMITTED _____ DATE

APPROVED _____ CHIEF ENGINEER DATE

INSTALLATION PLAN
TRACK EQUIPMENT ROUTE C

LOCATION: POTOMAC YARD STATION
AUTOMATIC TRAIN CONTROL

SCALE	DRAWING NO.	SHEET NO.
	C11-G-007A	

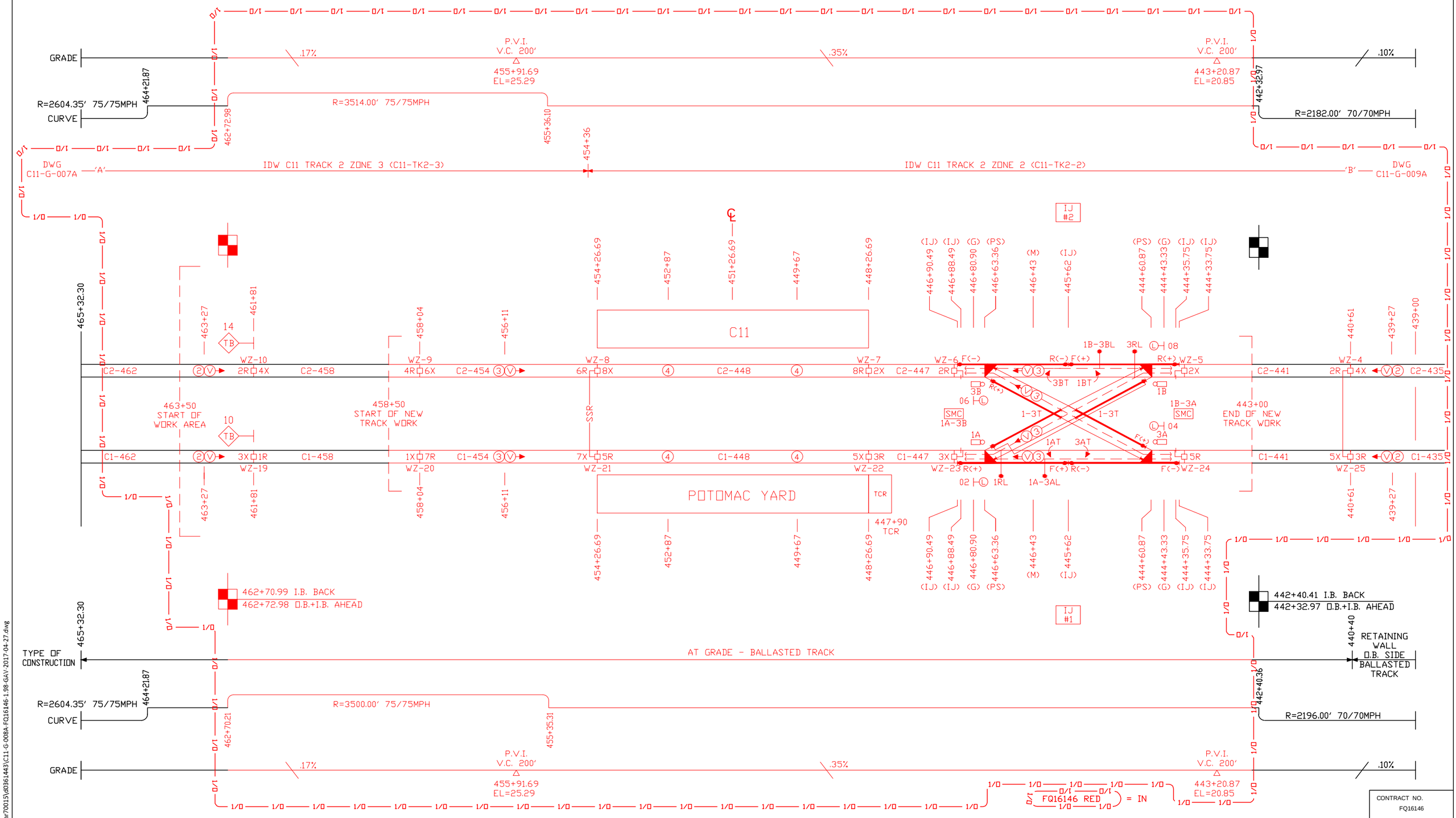

CONTRACT NO.
FQ16146

DESIGNED	ACC	09/21/16	DATE
DRAWN	DMR	09/21/16	DATE
CHECKED			DATE
APPROVED			DATE

REFERENCE DRAWINGS

NUMBER	DESCRIPTION

REVISIONS

DATE	BY	DESCRIPTION
04/27/17	MM	POTOMAC YARD STATION FQ16146

WASHINGTON METROPOLITAN AREA TRANSIT AUTHORITY

DEPARTMENT OF TRANSIT INFRASTRUCTURE AND ENGINEERING SERVICES
OFFICE OF THE CHIEF ENGINEER, INFRASTRUCTURE

SUBMITTED _____ DATE

APPROVED _____ CHIEF ENGINEER DATE

INSTALLATION PLAN
TRACK EQUIPMENT ROUTE C

LOCATION: POTOMAC YARD STATION
AUTOMATIC TRAIN CONTROL

SCALE	DRAWING NO.	SHEET NO.
	C11-G-008A	

Apr 28,2017-2:16pm
C:\pwworking\hmm\external\car70015\d0361443\C11-G-008A-FQ16146-1.98-GAV-2017-04-27.dwg

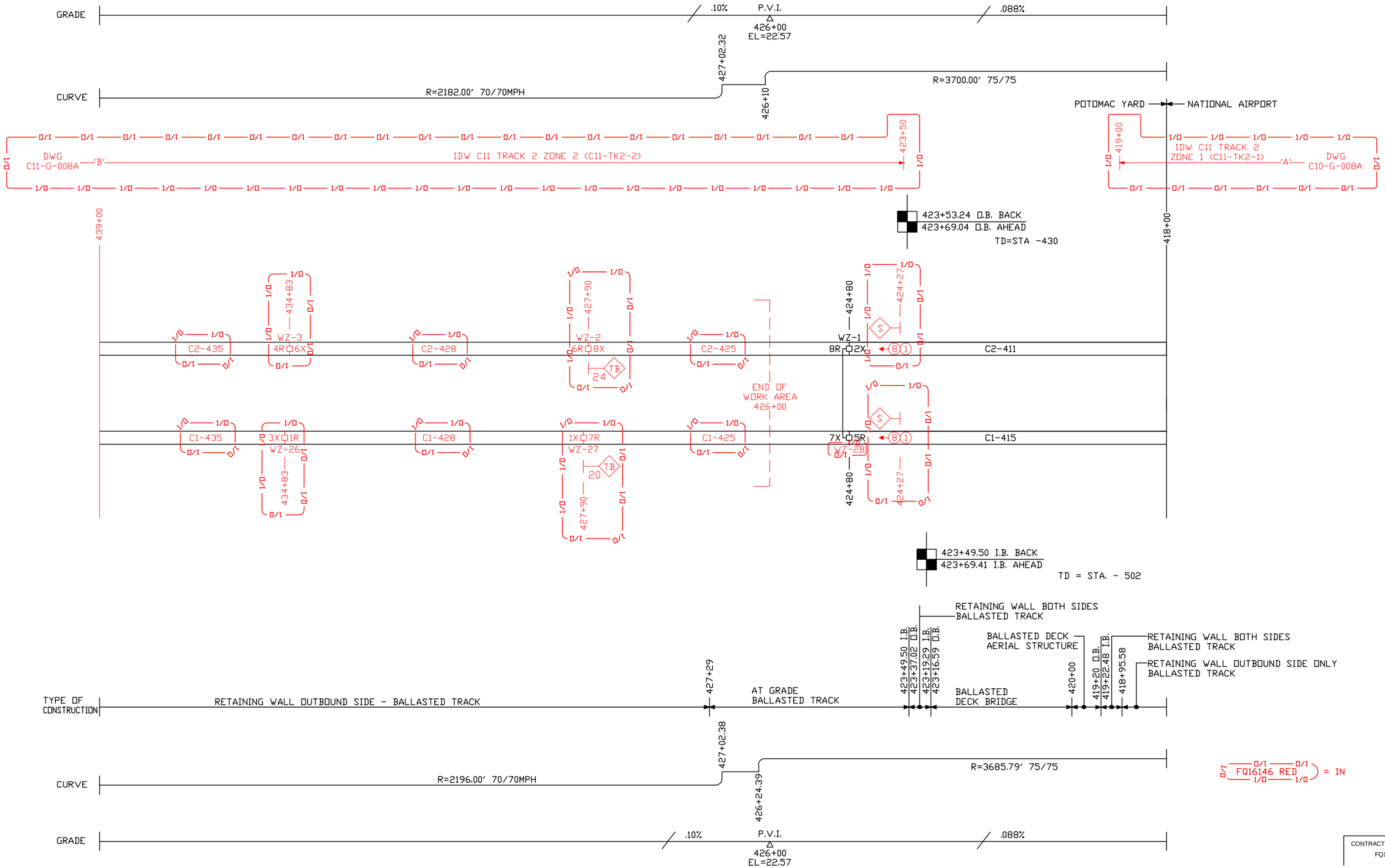

CONTRACT NO.
FQ15192

DESIGNED	ACC	09/21/16 DATE
DRAWN	DMR	09/21/16 DATE
CHECKED		DATE
APPROVED		DATE

REFERENCE DRAWINGS

NUMBER	DESCRIPTION

REVISIONS

DATE	BY	DESCRIPTION
04/27/17	MM	POTOMAC YARD STATION FQ16146

WASHINGTON METROPOLITAN AREA TRANSIT AUTHORITY

DEPARTMENT OF TRANSIT INFRASTRUCTURE AND ENGINEERING SERVICES
OFFICE OF THE CHIEF ENGINEER, INFRASTRUCTURE

SUBMITTED _____ DATE

APPROVED CHIEF ENGINEER _____ DATE

INSTALLATION PLAN
TRACK EQUIPMENT ROUTE C

LOCATION: POTOMAC YARD STATION
AUTOMATIC TRAIN CONTROL

SCALE	DRAWING NO.	SHEET NO.
	C11-G-009A	

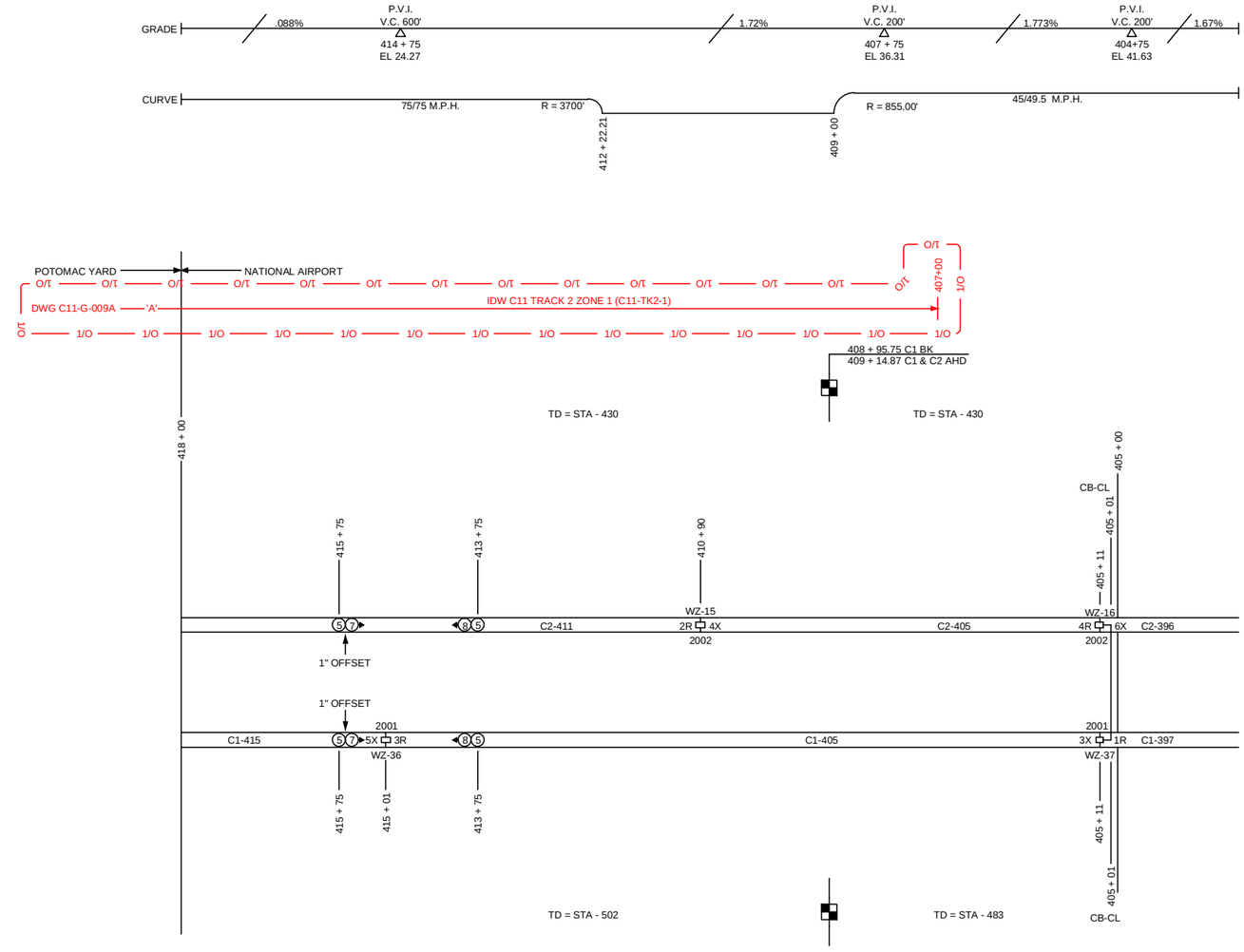

CARRIER NUMBER	FREQUENCY (HZ)
F1 - (1X, 1R)	2100
F2 - (2X, 2R)	2320
F3 - (3X, 3R)	2580
F4 - (4X, 4R)	2820
F5 - (5X, 5R)	3100
F6 - (6X, 6R)	3370
F7 - (7X, 7R)	3660
F8 - (8X, 8R)	3900

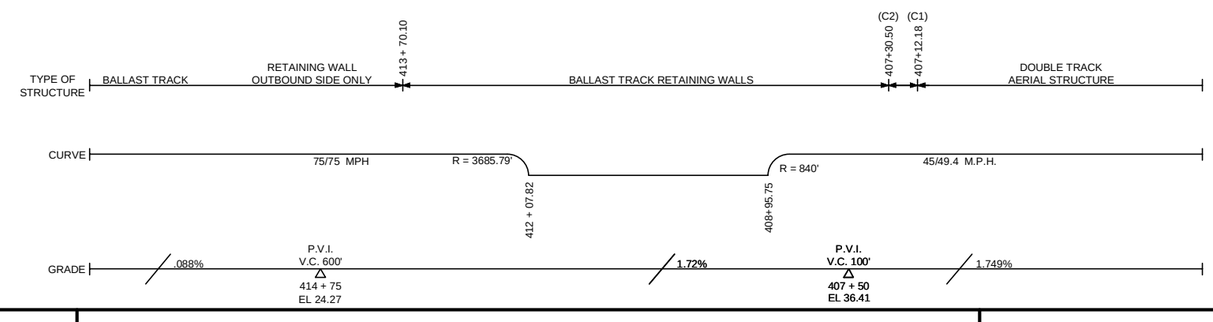

DESIGNED	JJB/RWL	11/8/74 DATE
DRAWN	P.D.	12/18/74 DATE
CHECKED	J.D.E.	5/7/75 DATE
APPROVED	L.J.K.	5/8/75 DATE
APPROVED GRS CO	V. KOVALCEK	2/22/78 DATE

REVISIONS

REV NO.	DATE	BY	DESCRIPTION	REV NO.	DATE	BY	DESCRIPTION
A	9/21/84	PF	AS BUILT DRAWING				
B	12/12/12	CLN	ATP REPLACEMENT FQ11118				
C	04/27/17	MM	FQ-16146 POTOMAC YARD STATION				

WASHINGTON METROPOLITAN AREA TRANSIT AUTHORITY

THIS CONTENTS OF THIS DOCUMENT WERE DESIGNED AND PROVIDED BY OTHERS AND ARE NOT THE RESPONSIBILITY OF ANSALDO STS USA, INC.
— WARNING —
PRIOR TO PLACING THE CIRCUIT SET FORTH ON THIS DRAWING INTO REVENUE SERVICE, THE CIRCUIT AND THE COMPLETE SYSTEM OF WHICH THIS CIRCUIT IS A PART MUST BE TESTED AS FOLLOWS:
(A) CIRCUIT SELECTION (BREAKDOWN) TEST (B) SERVICE (OPERATION) TEST

GENERAL RAILWAY SIGNAL COMPANY
A UNIT OF GENERAL SIGNAL CORPORATION
ROCHESTER NEW YORK 14902

BY_____

INSTALLATION PLAN
TRACK EQUIPMENT
ROUTE C

LOCATION: NATIONAL AIRPORT

AUTOMATIC TRAIN CONTROL 1Z2016

SCALE	DRAWING NO.	PAGE NO.
NONE	C10-G-8A	

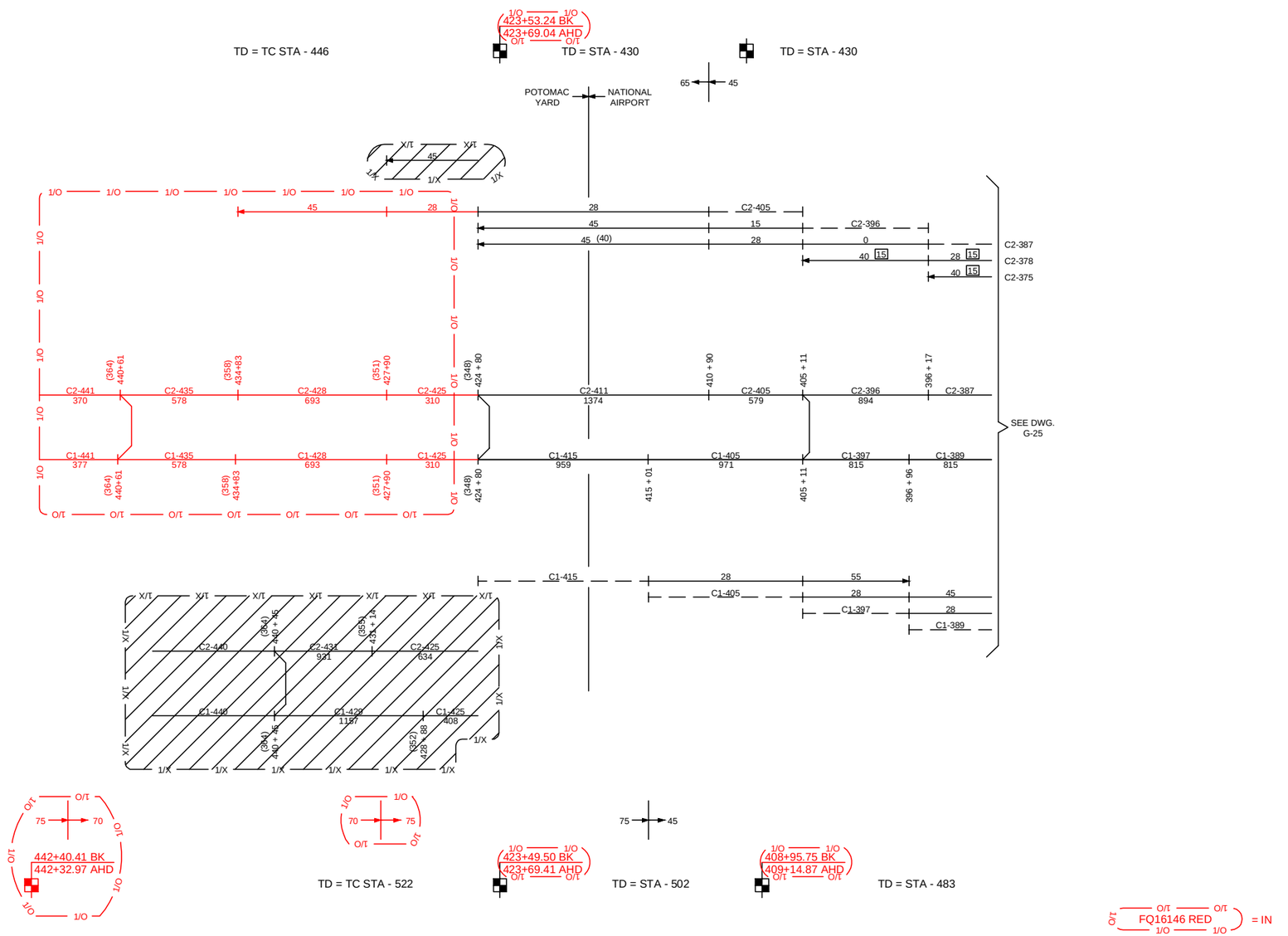

DESIGNED	JJB/RWL	11/8/74 DATE
DRAWN	P.D.	12/18/74 DATE
CHECKED	J.D.E.	5/7/75 DATE
APPROVED	L.J.K.	5/8/75 DATE
APPROVED GRS CO	V. KOVALCEK	2/22/78 DATE

REVISIONS

REV NO.	DATE	BY	DESCRIPTION	REV NO.	DATE	BY	DESCRIPTION
A	9/21/84	P.F.	AS BUILT DRAWING				
B	7/22/13	KDI	REDRAWN PER CONTRACT FQ11118				
C	04/27/17	MM	FQ16146 - POTOMAC YARD STATION				

WASHINGTON METROPOLITAN AREA TRANSIT AUTHORITY

THIS CONTENTS OF THIS DOCUMENT WERE DESIGNED AND PROVIDED BY OTHERS AND ARE NOT THE RESPONSIBILITY OF ANSALDO STS USA, INC.

WARNING

PRIOR TO PLACING THE CIRCUIT SET FORTH ON THIS DRAWING INTO REVENUE SERVICE, THE CIRCUIT AND THE COMPLETE SYSTEM OF WHICH THIS CIRCUIT IS A PART MUST BE TESTED AS FOLLOWS:
(A) CIRCUIT SELECTION (BREAKDOWN) TEST (B) SERVICE (OPERATION) TEST

GENERAL RAILWAY SIGNAL COMPANY
A UNIT OF GENERAL SIGNAL CORPORATION
ROCHESTER NEW YORK 14902

BY_____

ATP SPEED COMMANDS
CONTROL LINE DIAGRAM
ROUTE C NORMAL DIRECTION
(PAGE 1 OF 2)

LOCATION: NATIONAL AIRPORT

AUTOMATIC TRAIN CONTROL 1Z2016

SCALE	DRAWING NO.	PAGE NO.
NONE	C10-G-24	

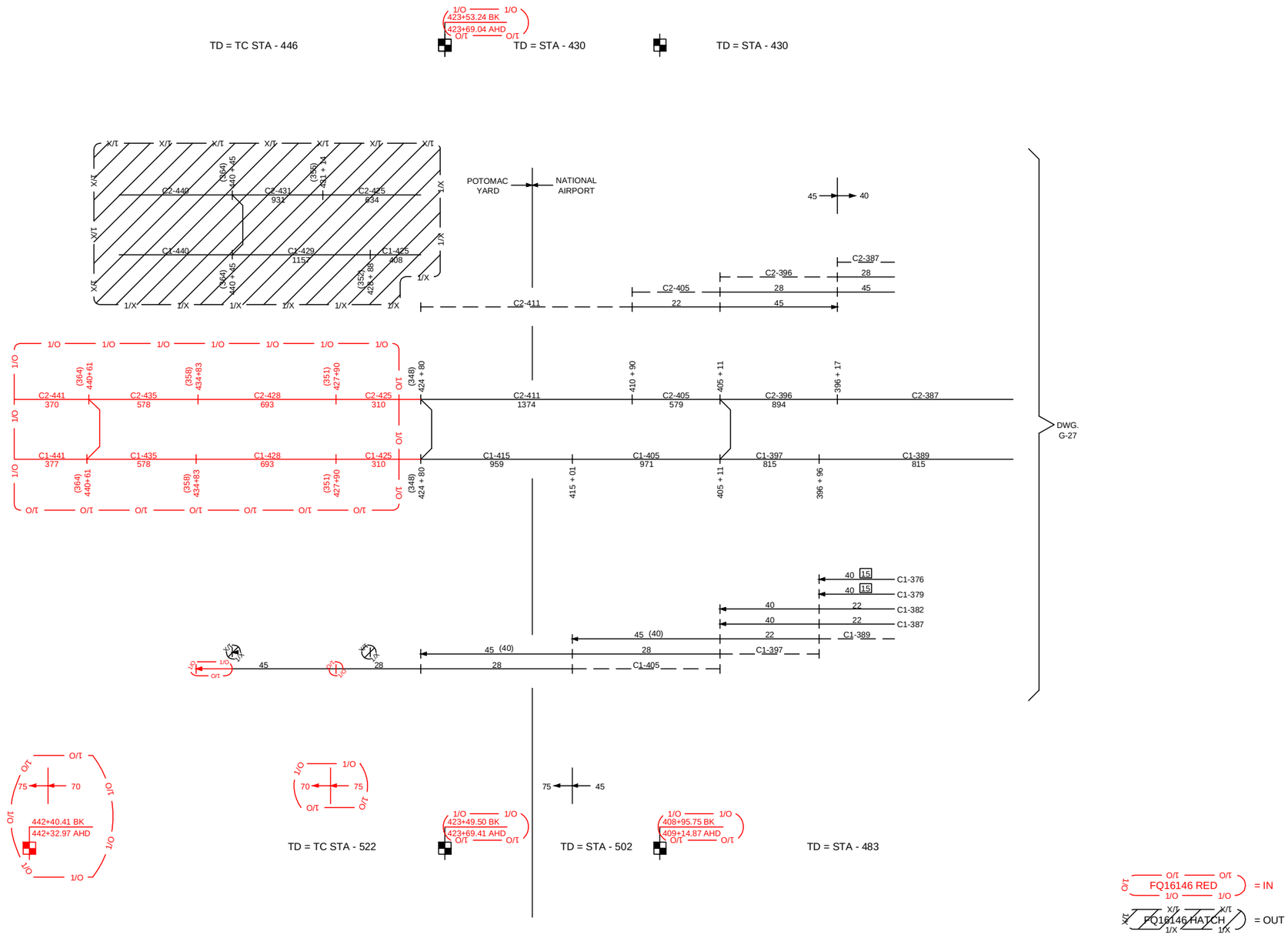

DESIGNED	JJB/RWL	11/8/74 DATE
DRAWN	P.D.	12/18/74 DATE
CHECKED	J.D.E.	5/7/75 DATE
APPROVED	L.J.K.	5/8/75 DATE
APPROVED GRS CO	V. KOVALCEK	2/22/78 DATE

REVISIONS

REV NO.	DATE	BY	DESCRIPTION	REV NO.	DATE	BY	DESCRIPTION
A	9/21/84	PF	AS BUILT DRAWING				
B	7/22/13	KDI	REDRAWN PER CONTRACT FQ11118				
C	04/27/2017	MM	FQ16146 - POTOMAC YARD STATION				

WASHINGTON METROPOLITAN AREA TRANSIT AUTHORITY

THIS CONTENTS OF THIS DOCUMENT WERE DESIGNED AND PROVIDED BY OTHERS AND ARE NOT THE RESPONSIBILITY OF ANSALDO STS USA, INC.
WARNING
PRIOR TO PLACING THE CIRCUIT SET FORTH ON THIS DRAWING INTO REVENUE SERVICE, THE CIRCUIT AND THE COMPLETE SYSTEM OF WHICH THIS CIRCUIT IS A PART MUST BE TESTED AS FOLLOWS:
(A) CIRCUIT SELECTION (BREAKDOWN) TEST (B) SERVICE (OPERATION) TEST

GENERAL RAILWAY SIGNAL COMPANY
A UNIT OF GENERAL SIGNAL CORPORATION
ROCHESTER NEW YORK 14602

BY_____

A.T.P. SPEED COMMANDS
CONTROL LINE DIAGRAM
ROUTE C REVERSE DIRECTION
(PAGE 1 OF 2)

LOCATION: NATIONAL AIRPORT

AUTOMATIC TRAIN CONTROL 1Z2016

SCALE	DRAWING NO.	PAGE NO.
NONE	C10-G-26	

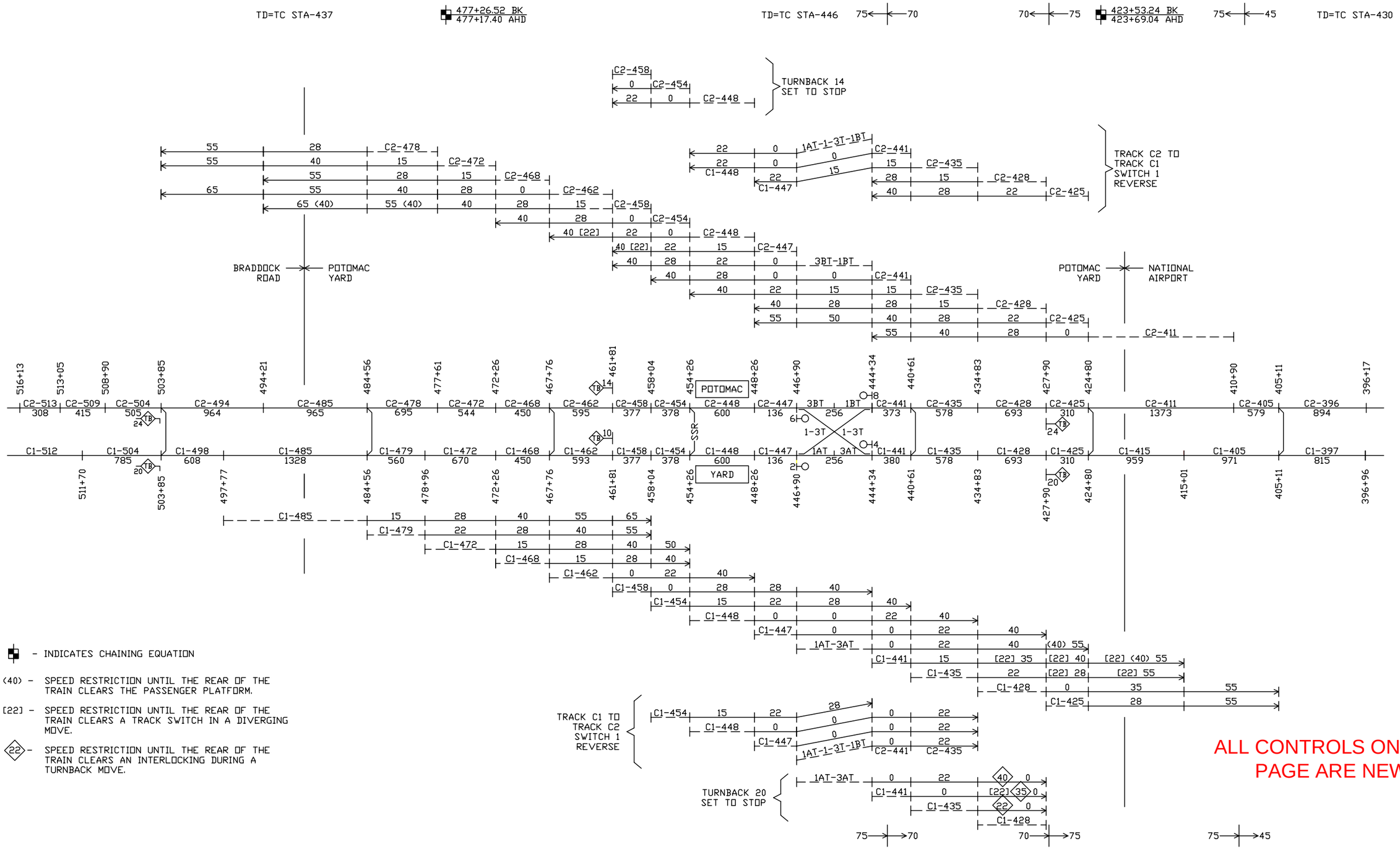

DESIGNED	RDP	DATE
DRAWN	ACC	DATE
CHECKED		DATE
APPROVED	...	DATE

REFERENCE DRAWINGS

NUMBER	DESCRIPTION

REVISIONS

DATE	BY	DESCRIPTION
04-27-2017	MM	POTOMAC YARD STATION FQ 16146

WASHINGTON METROPOLITAN AREA TRANSIT AUTHORITY

DEPARTMENT OF TRANSIT INFRASTRUCTURE AND ENGINEERING SERVICES
OFFICE OF THE CHIEF ENGINEER, INFRASTRUCTURE

SUBMITTED DATE

APPROVED
CHIEF ENGINEER DATE

ATP SPEED COMMANDS
CONTROL LINE DIAGRAM
"C" ROUTE NORMAL DIRECTION

LOCATION: POTOMAC YARD STATION
AOUTOMATIC TRAIN CONTROL

CONTRACT NO. FQ16146

SCALE

DRAWING NO. C11-G-CL-1

SHEET NO.

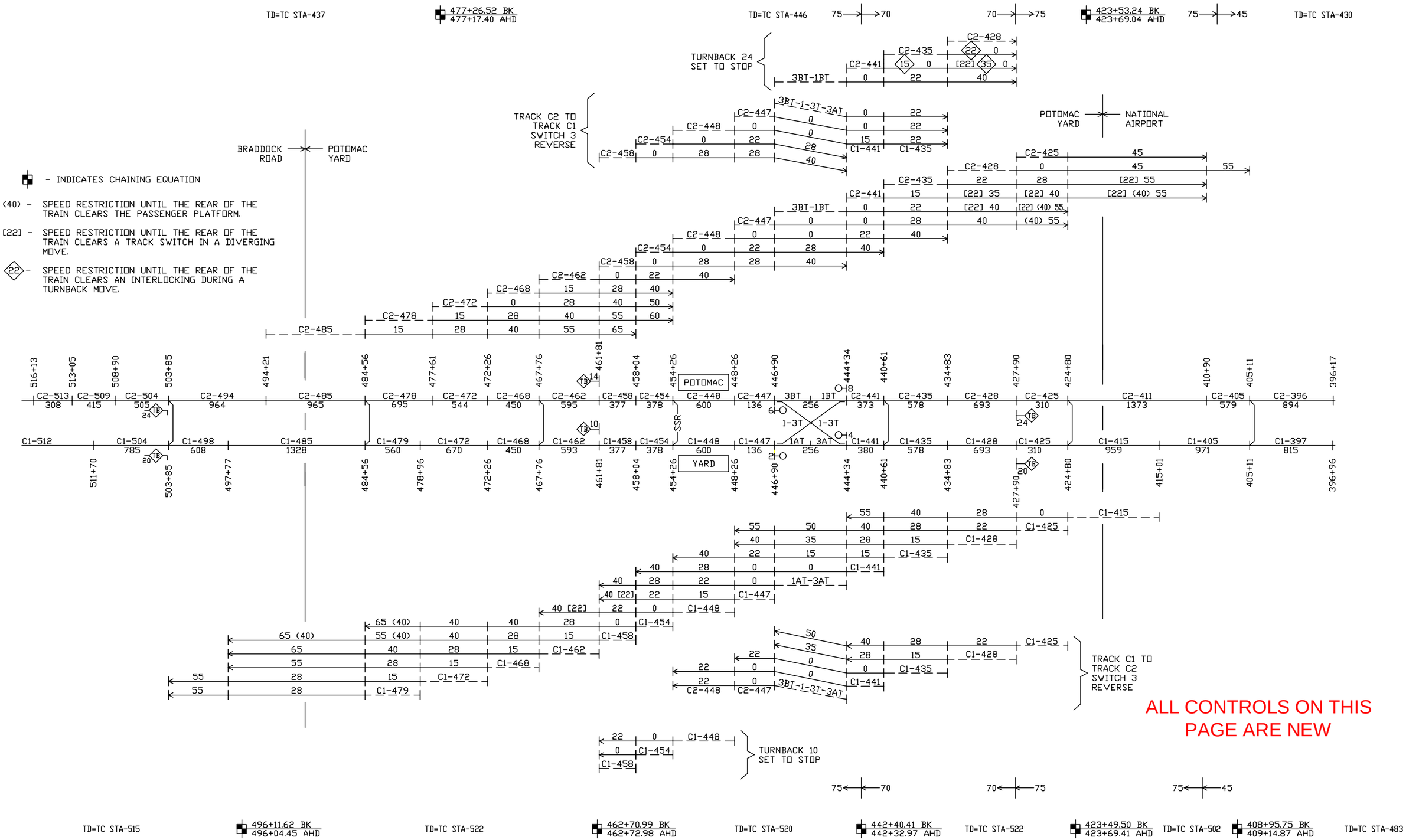

DESIGNED	RDP	DATE
DRAWN	ACC	DATE
CHECKED		DATE
APPROVED	...	DATE

REFERENCE DRAWINGS

NUMBER	DESCRIPTION

REVISIONS

DATE	BY	DESCRIPTION
04/27/17	MM	POTOMAC YARD STATION FQ 16146

WASHINGTON METROPOLITAN AREA TRANSIT AUTHORITY

DEPARTMENT OF TRANSIT INFRASTRUCTURE AND ENGINEERING SERVICES
OFFICE OF THE CHIEF ENGINEER, INFRASTRUCTURE

SUBMITTED _____ DATE

APPROVED
CHIEF ENGINEER _____ DATE

ATP SPEED COMMANDS
CONTROL LINE DIAGRAM
"C" ROUTE REVERSE DIRECTION

LOCATION: POTOMAC YARD STATION
AOUTOMATIC TRAIN CONTROL

CONTRACT NO. FQ16146

SCALE

DRAWING NO. C11-G-CL-2

SHEET NO.

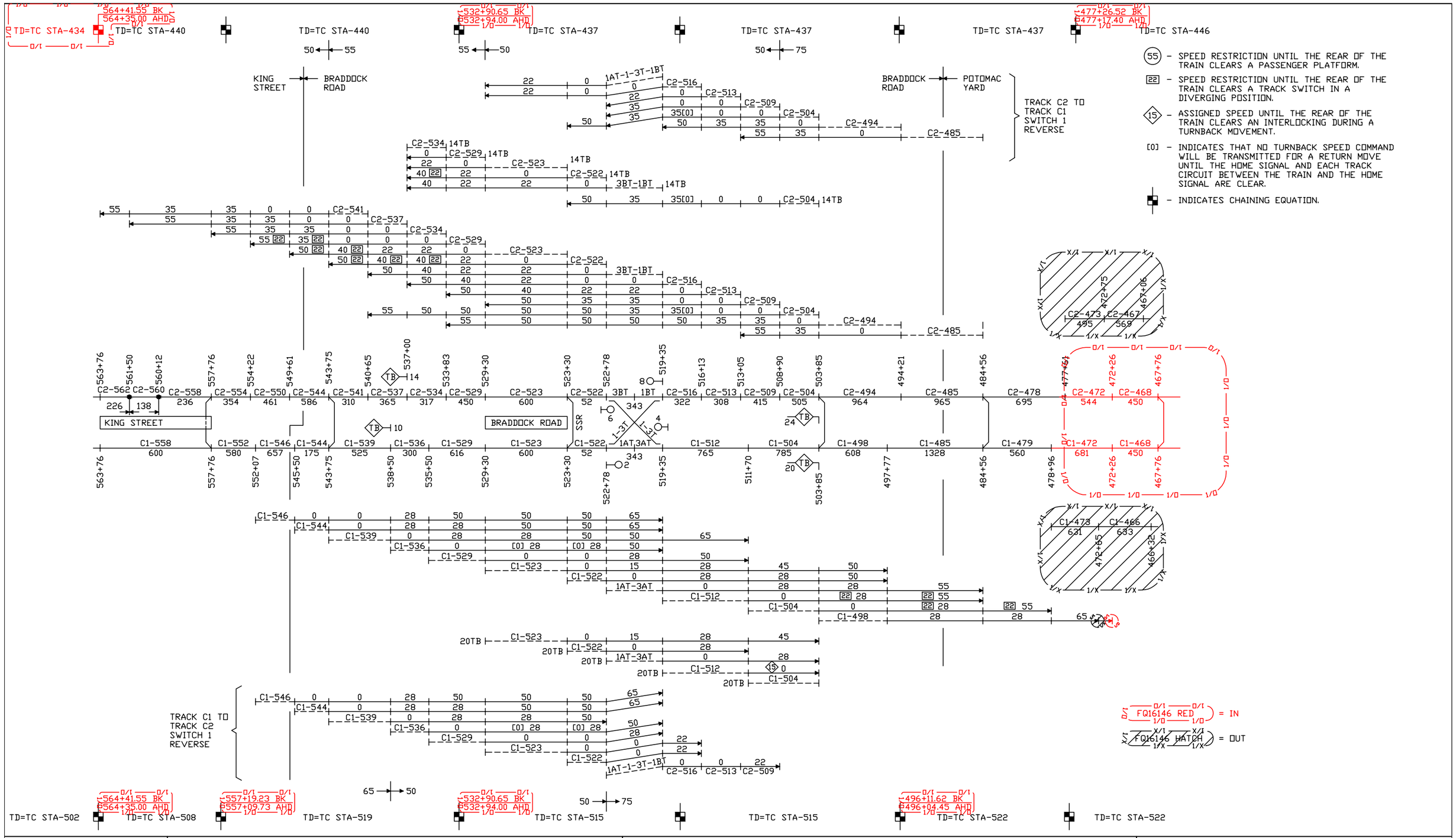

DESIGNED RF Kassmann C.L. Ohme	2-1-80	DATE
DRAWN B. ROMBAUT	2-6-80	DATE
CHECKED E.L. Bennett	3-7-80	DATE
APPROVED D. Manly	3-17-80	DATE
APPROVED GRS CO. H.S. Mallenburg	3-18-83	DATE

REVISIONS

REV. NO.	DATE	BY	DESCRIPTION	REV. NO.	DATE	BY	DESCRIPTION
A	3-18-83	KAD	AS BUILT DRAWING				
B	2-29-91	WWT	ECN 25				
C	12-14-12	MEP	REDRAWN, FQ10063-CENI-10				
D	04-27-17	MM	FQ16146 - POTOMAC YARD STATION				

WASHINGTON METROPOLITAN AREA TRANSIT AUTHORITY

GENERAL RAILWAY SIGNAL COMPANY
A UNIT OF GENERAL SIGNAL CORPORATION
ROCHESTER NEW YORK 14602

BY_____

ATP SPEED COMMANDS
CONTROL LINE DIAGRAM
ROUTE C NORMAL DIRECTION

91-80902

LOCATION: BRADDOCK ROAD
AUTOMATIC TRAIN CONTROL

DEC 5, 1983

1Z2016

SCALE	DRAWING NO.	PAGE NO.
NONE	C12-G-CL1	ATC-D57-51

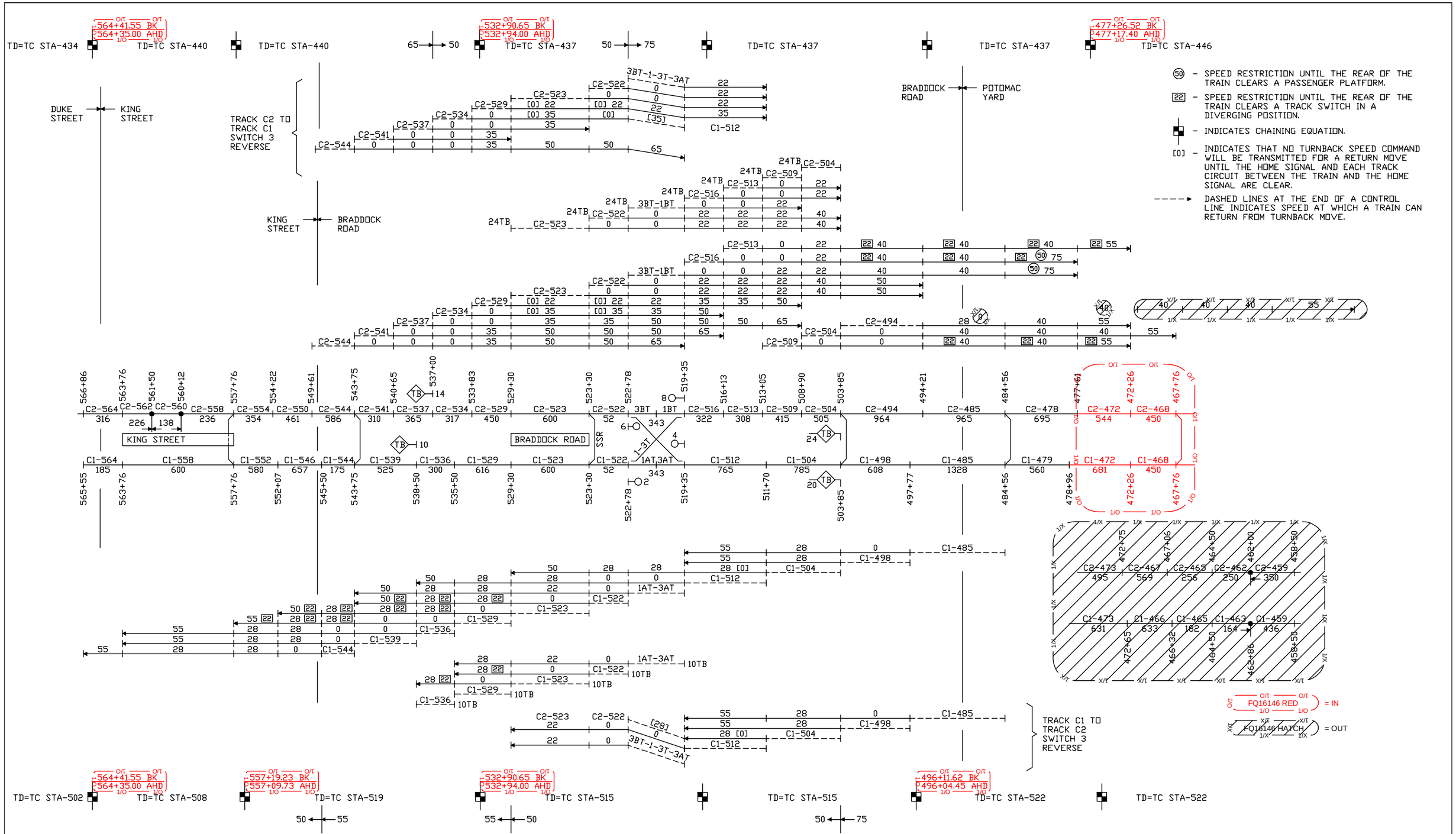

DESIGNED R.T. Kassmann, C.L. Chase 2-1-80
DRAWN B. ROMBAUT DATE 2-7-80
CHECKED F.L. Bennett DATE 3-7-80
APPROVED D.J. Manly DATE 3-17-80
APPROVED GRS CO. H.G. Smallenburg DATE 3-18-83

REVISIONS

REV. NO.	DATE	BY	DESCRIPTION	REV. NO.	DATE	BY	DESCRIPTION
A	3-18-83	KAD	AS BUILT DRAWING				
B	2-29-91	UMF	ECN 26				
C	12-14-12	MEP	REDRAWN, FQ10063-CENI-10				
D	04-27-17	MM	FQ16146 - POTOMAC YARD STATION				

WASHINGTON METROPOLITAN AREA TRANSIT AUTHORITY

GENERAL RAILWAY SIGNAL COMPANY
A UNIT OF GENERAL SIGNAL CORPORATION
ROCHESTER NEW YORK 14602

BY_____

ATP SPEED COMMANDS
CONTROL LINE DIAGRAM
ROUTE C REVERSE DIRECTION

LOCATION: BRADDOCK ROAD
AUTOMATIC TRAIN CONTROL DEC 5, 1983

91-80902

1Z2016

SCALE	DRAWING NO.	PAGE NO.
NONE	C12-G-CL2	ATC-D57-51

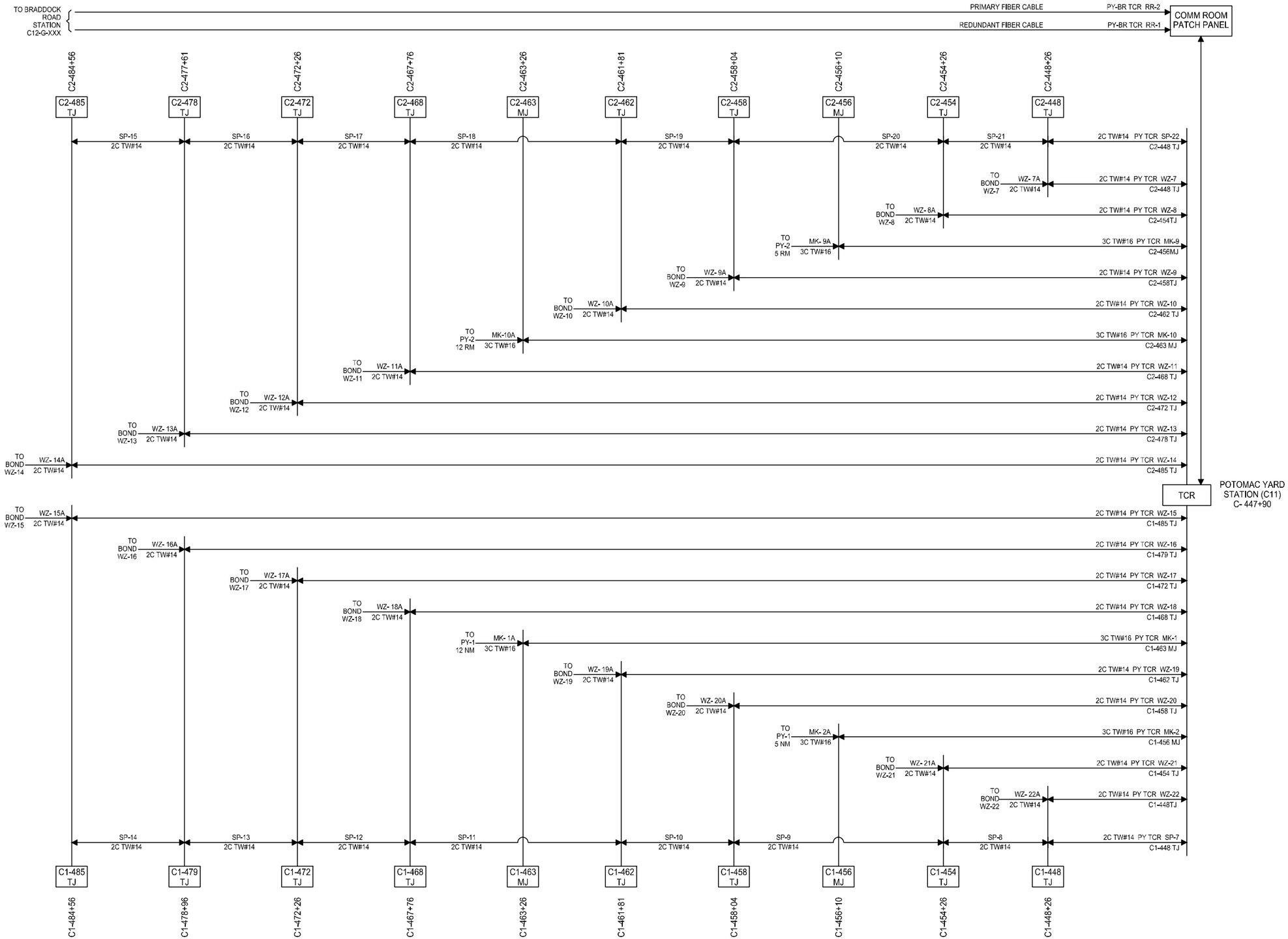

LEGEND

- TJ — TRACK JUCTION BOX
- DJ — DISTRIBUTION JUNCTION BOX
- WJ — SWITCH JUNCTION BOX
- IJ — INTERLOCKING JUNCTION BOX
- LNJ — LINE JUNCTION BOX
- GJ — SIGNAL JUNCTION BOX
- MJ — MARKER COIL JUNCTION BOX
- IFJ — INTERFACE JUNCTION BOX
- SMC — SNOWMELTER CASE
- LJ — LOOP JUNCTION BOX

NOTES

1. ALL SPARE CABLES (MARKED SP) ARE 2C TW#14 (AF CABLE).
2. ALL LOCAL CABLES FROM BOXES TO IMPEDANCE BONDS ARE 2C TW#14 (AF CABLE).

CONTRACT NO. FQ16146

DESIGNED		DATE
DRAWN	ACC	09/26/16 DATE
CHECKED		DATE
APPROVED	...	... DATE

REFERENCE DRAWINGS

NUMBER	DESCRIPTION

REVISIONS

DATE	BY	DESCRIPTION
04/27/17	MM	POTOMAC YARD STATION FQ16146

WASHINGTON METROPOLITAN AREA TRANSIT AUTHORITY

DEPARTMENT OF TRANSIT INFRASTRUCTURE AND ENGINEERING SERVICES
OFFICE OF THE CHIEF ENGINEER, INFRASTRUCTURE

SUBMITTED — DATE

APPROVED — CHIEF ENGINEER — DATE

TRAIN CONTROL CABLE PLAN
TRACK C1 AND C2 OUTBOUND

LOCATION: POTOMAC YARD STATION
AUTOMATIC TRAIN CONTROL

SCALE	DRAWING NO.	SHEET NO.
NONE	C11-CBLN-001	

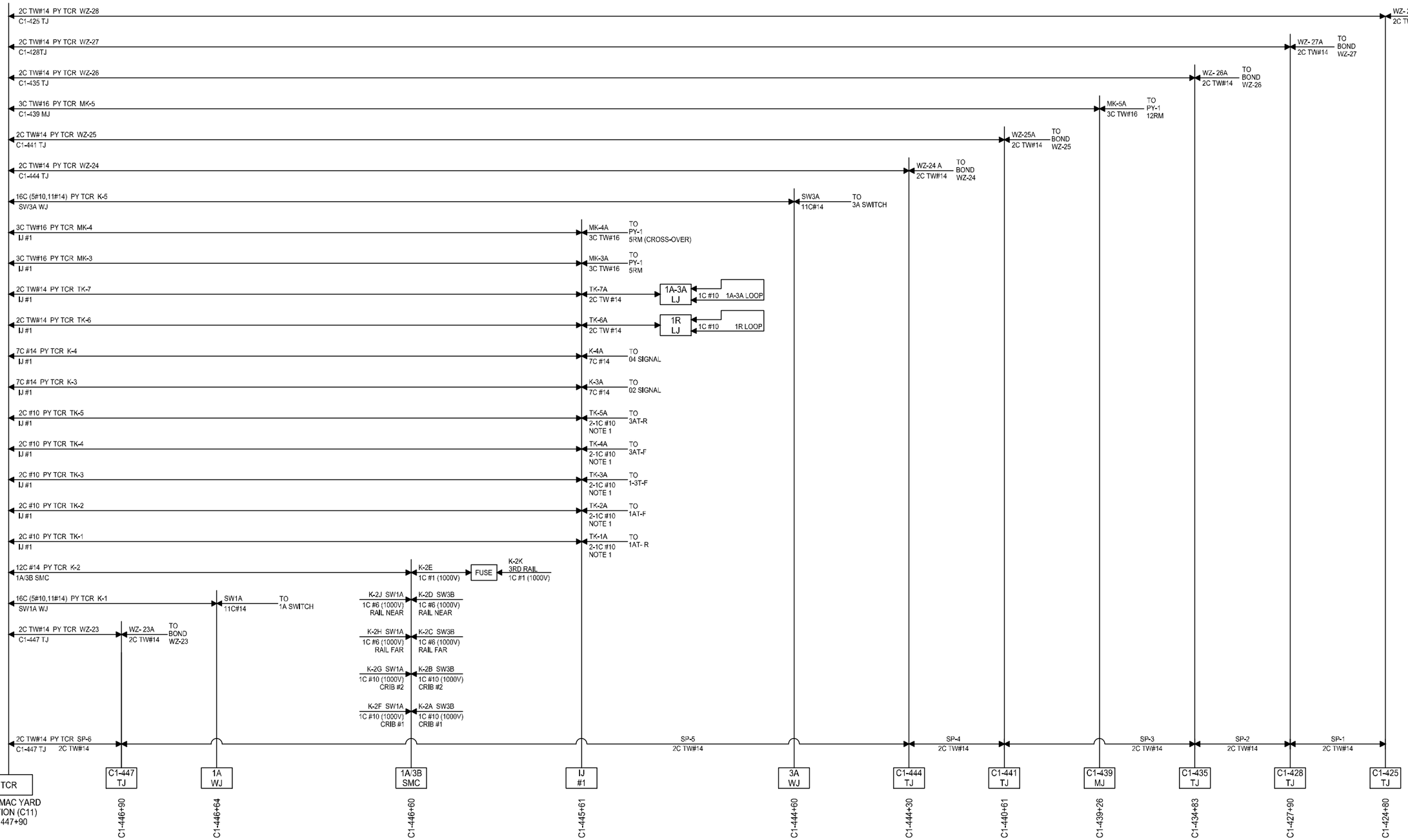

LEGEND

- TJ TRACK JUCTION BOX
- DJ DISTRIBUTION JUNCTION BOX
- WJ SWITCH JUNCTION BOX
- IJ INTERLOCKING JUNCTION BOX
- LNJ LINE JUNCTION BOX
- GJ SIGNAL JUNCTION BOX
- MJ MARKER COIL JUNCTION BOX
- IFJ INTERFACE JUNCTION BOX
- SMC SNOWMELTER CASE
- LJ LOOP JUNCTION BOX

NOTES

1. CABLE BETWEEN JUNCTION BOXES AND RAILS TO BE 2-1C #10 (1000V), HAND TWISTED 12 TWISTS PER FOOT.
2. ALL LOCAL CABLES FROM JUNCTION BOXES TO IMPEDANCE BONDS ARE 2C TW#14 (AF CABLE).

CONTRACT NO. FQ16146

DESIGNED		DATE
DRAWN	ACC	09/26/16 DATE
CHECKED		DATE
APPROVED	...	... DATE

REFERENCE DRAWINGS

NUMBER	DESCRIPTION

REVISIONS

DATE	BY	DESCRIPTION
04/27/17	MM	POTOMAC YARD STATION FQ16146

WASHINGTON METROPOLITAN AREA TRANSIT AUTHORITY

DEPARTMENT OF TRANSIT INFRASTRUCTURE AND ENGINEERING SERVICES
OFFICE OF THE CHIEF ENGINEER, INFRASTRUCTURE

SUBMITTED DATE

APPROVED CHIEF ENGINEER DATE

TRAIN CONTROL CABLE PLAN
TRACK C1 INBOUND

LOCATION: POTOMAC YARD STATION
AUTOMATIC TRAIN CONTROL

SCALE	DRAWING NO.	SHEET NO.
NONE	C11-CBLN-002	

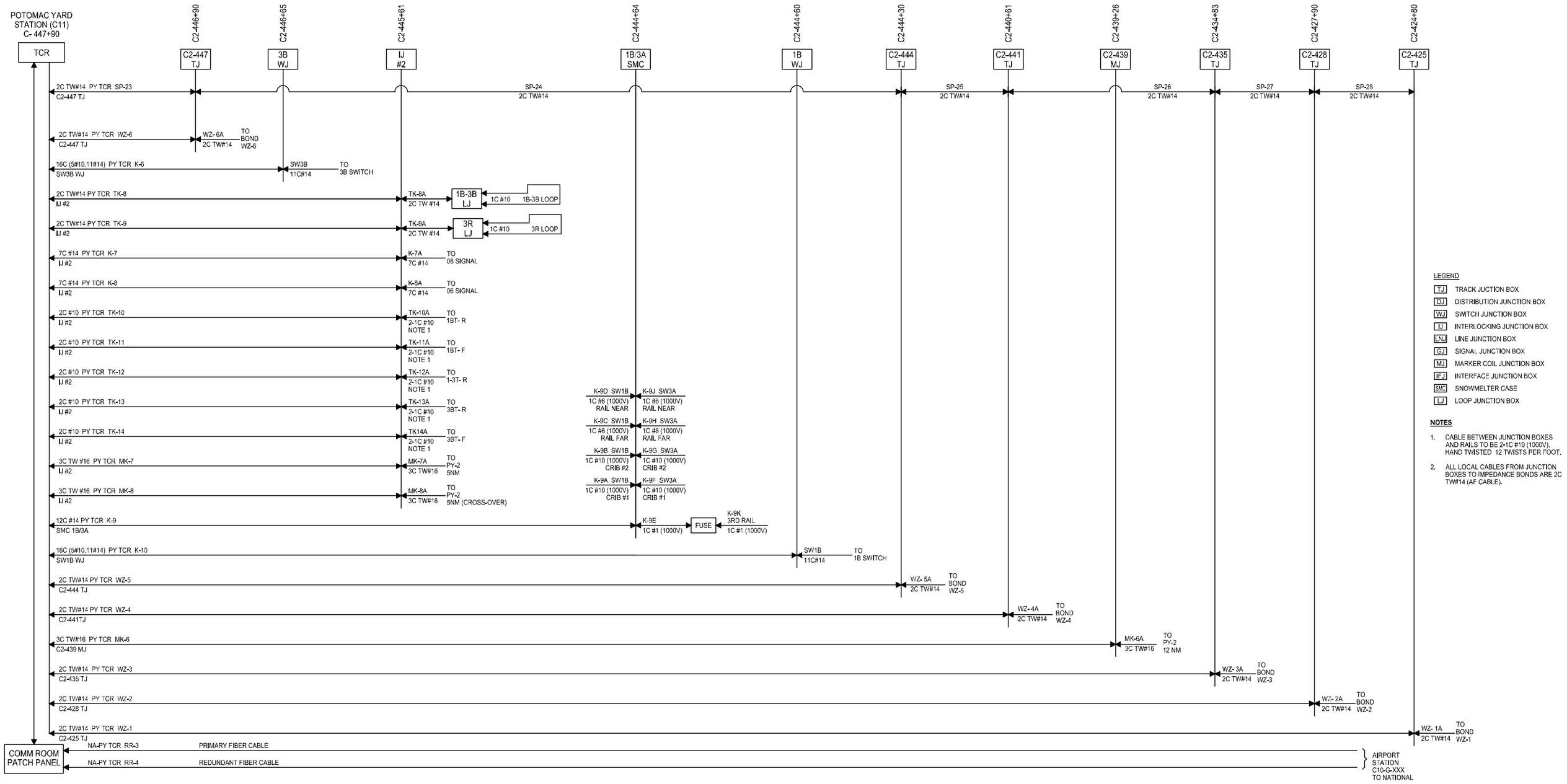

CONTRACT NO. FQ16146

DESIGNED		DATE
DRAWN	ACC	09/26/16 DATE
CHECKED		DATE
APPROVED	...	... DATE

REFERENCE DRAWINGS

NUMBER	DESCRIPTION

REVISIONS

DATE	BY	DESCRIPTION
04/27/17	MM	POTOMAC YARD STATION FQ16146

WASHINGTON METROPOLITAN AREA TRANSIT AUTHORITY

DEPARTMENT OF TRANSIT INFRASTRUCTURE AND ENGINEERING SERVICES
OFFICE OF THE CHIEF ENGINEER, INFRASTRUCTURE

SUBMITTED _____ DATE

APPROVED CHIEF ENGINEER _____ DATE

TRAIN CONTROL CABLE PLAN TRACK C2 INBOUND

LOCATION: POTOMAC YARD STATION
AUTOMATIC TRAIN CONTROL

SCALE	DRAWING NO.	SHEET NO.
NONE	C11-CBLN-003	

LEGEND

Y = YES
BLANK OR N = NO
P = PARTIAL

↑ = ENERGIZED
↓ = DE-ENERGIZED

NA = RONALD REAGAN NATION AIRPORT STATION
PY = POTOMAC YARD STATION
BR = BRADDOCK ROAD STATION
★ = TRACK OCCUPANCY INDICATOR ON LCP

LINE	ENTRANCE	EXIT	CENTRAL OR LOCAL PANEL: PUSHBUTTON (PB)	CENTRAL OR LOCAL PANEL: FLEETING	CENTRAL OR LOCAL PANEL: LOCKOUT OF WSPB OR AUTO ROUTE INITIATION	WAYSIDE PUSHBUTTON ROUTE (WSPB): TO (TRK. & DIR. OR PLAT. NO.)	WAYSIDE PUSHBUTTON ROUTE (WSPB): LOCKOUT OF CENTRAL OR LOCAL PB INITIATION	WAYSIDE PUSHBUTTON ROUTE (WSPB): NOTES	AUTOMATIC ROUTING (AUTO) OR TERMINAL MODE SELECTION: TO (TRK. & DIR. OR PLAT. NO.)	AUTOMATIC ROUTING (AUTO) OR TERMINAL MODE SELECTION: INHIBIT CONTROL	AUTOMATIC ROUTING (AUTO) OR TERMINAL MODE SELECTION: ID INITIATED	AUTOMATIC ROUTING (AUTO) OR TERMINAL MODE SELECTION: DETECTOR TRACK INITIATED	AUTOMATIC ROUTING (AUTO) OR TERMINAL MODE SELECTION: TRAIN READY INITIATED	AUTOMATIC ROUTING (AUTO) OR TERMINAL MODE SELECTION: LOCKOUT OF CENTRAL OR LOCAL INITIATION	AUTOMATIC ROUTING (AUTO) OR TERMINAL MODE SELECTION: MAY BE AUTO. INITIATED BY TERMINAL MODE	THROUGH ROUTING: INTERL. CONT. PAN. PUSHBUTTON	THROUGH ROUTING: WAYSIDE PUSHBUTTON	THROUGH ROUTING: AUTOMATIC	CASCADE ROUTING: WAYSIDE PUSHBUTTON	CASCADE ROUTING: AUTOMATIC	FLEETING: RESTORABLE	FLEETING: CANCEL	FLEETING: WAYSIDE PUSHBUTTON ROUTE THAT CANCELS FLEETED ROUTE	WHEN FLEETED INHIBITS AUTOMATIC TERMINAL MODE CONTROL OF SIGNALS	WHEN IN AUTOMATIC TERMINAL MODE CONTROL, INHIBITS FLEET CONTROL OF SIGNALS	TRAFFIC CALLED AND LOCKED OR DIRECTIONAL STICK CALLED	SWITCHES LOCKED	APPROACH LOCKING: RELEASED BY THESE TWO TRKS. OCCUPIED	APPROACH LOCKING: TIME SETTING (SEC.)	OVERLAP LOCKING: TRACK CIRCUITS THAT START INITIATION OF OVERLAP LOCKING	OVERLAP LOCKING: SWITCHES LOCKED)	OVERLAP LOCKING: RELEASED BY	PREVENTS: LOCAL SIGNAL CLEARING	PREVENTS: TRAFFIC OR DIRECTIONAL STICK CALL	PREVENTS: ADJACENT LOCATION SIGNAL CLEARING	REMARKS
2a	2	4	Y	Y																				NA-1N	1N, 3N	1TYPR C1-441 ↓↑	50				4	PY-NA1R	NATIONAL AIRPORT 28 / 34 with 5 Reverse	
2b	2	8	Y	Y																				NA-2R	1R, 3N	1TYPR C2-441 ↓↑					4, 6, 8	NA-PY2N	NATIONAL AIRPORT 32 / 34 with 5 Normal	
4a	4	2	Y	Y																				BR-1R	1N, 3N	1TYPR C1-447 ↓↑	43				2	BR-PY1N	BRADDOCK ROAD 02 with 1 Normal / 06 with 3 Reverse	
4b	4	6	Y	Y																				BR-2N	1N, 3R	1TYPR C2-447 ↓↑					2, 6, 8	PY-BR2R	BRADDOCK ROAD 02 with 1 Reverse / 06 with 3 Normal	
6a	6	8	Y	Y																				NA-2R	1N, 3N	2TYPR C2-441 ↓↑	50				8	NA-PY2N	NATIONAL AIRPORT 32 / 34 with 5 Normal	
6b	6	4	Y	Y																				NA-1N	1N, 3R	2TYPR C1-441 ↓↑					2, 4, 8	PY-NA-1R	NATIONAL AIRPORT 28 / 34 with 5 Reverse	
8a	8	6	Y	Y																				BR-2N	1N, 3N	2TYPR C2-447 ↓↑	43				6	PY-BR2R	BRADDOCK ROAD 02 with 1 Reverse / 06 with 3 Normal	
8b	8	2	Y	Y																				BR-1R	1R, 3N	2TYPR C1-447 ↓↑					2, 4, 6	BR-PY1N	BRADDOCK ROAD 02 with 1 Reverse / 06 with 3 Reverse	
10	10	–	Y	Y																																CHECKS BR-PY1R ↑
14	14	–	Y	Y																																CHECKS PY-BR2N ↑
20	20	–	Y	Y																																CHECKS PY-NA1N ↑
24	24	–	Y	Y																																CHECKS NA-PY2R ↑

TRACK COMBINATION REPEATER LIMITS

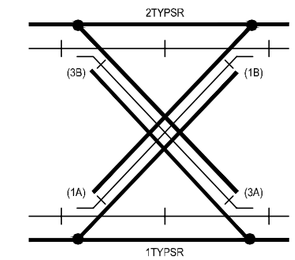

TRAFFIC DESIGNATION

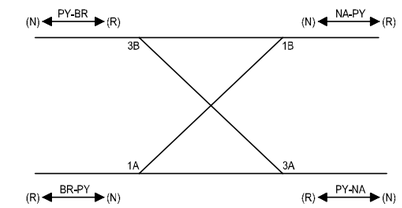

ROUTE LOCKING

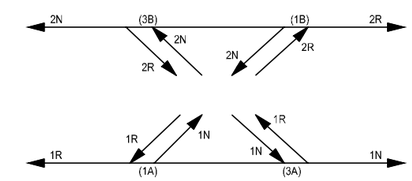

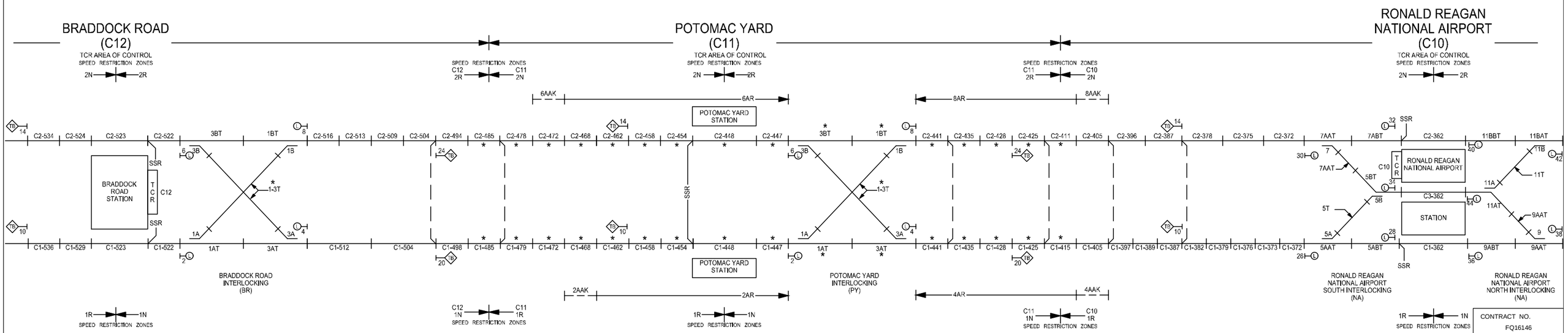

CONTRACT NO. FQ16146

DESIGNED		DATE
DRAWN	ACC	09/21/16 DATE
CHECKED		DATE
APPROVED		DATE

REFERENCE DRAWINGS

NUMBER	DESCRIPTION

REVISIONS

DATE	BY	DESCRIPTION
04/27/17	MM	POTOMAC YARD STATION - FQ16146

WASHINGTON METROPOLITAN AREA TRANSIT AUTHORITY

DEPARTMENT OF TRANSIT INFRASTRUCTURE AND ENGINEERING SERVICES
OFFICE OF THE CHIEF ENGINEER, INFRASTRUCTURE

SUBMITTED _____ DATE

APPROVED CHIEF ENGINEER _____ DATE

ROUTE CHART

LOCATION: POTOMAC YARD STATION
AUTOMATIC TRAIN CONTROL

SCALE

DRAWING NO. C11-G-(RC)

SHEET NO.

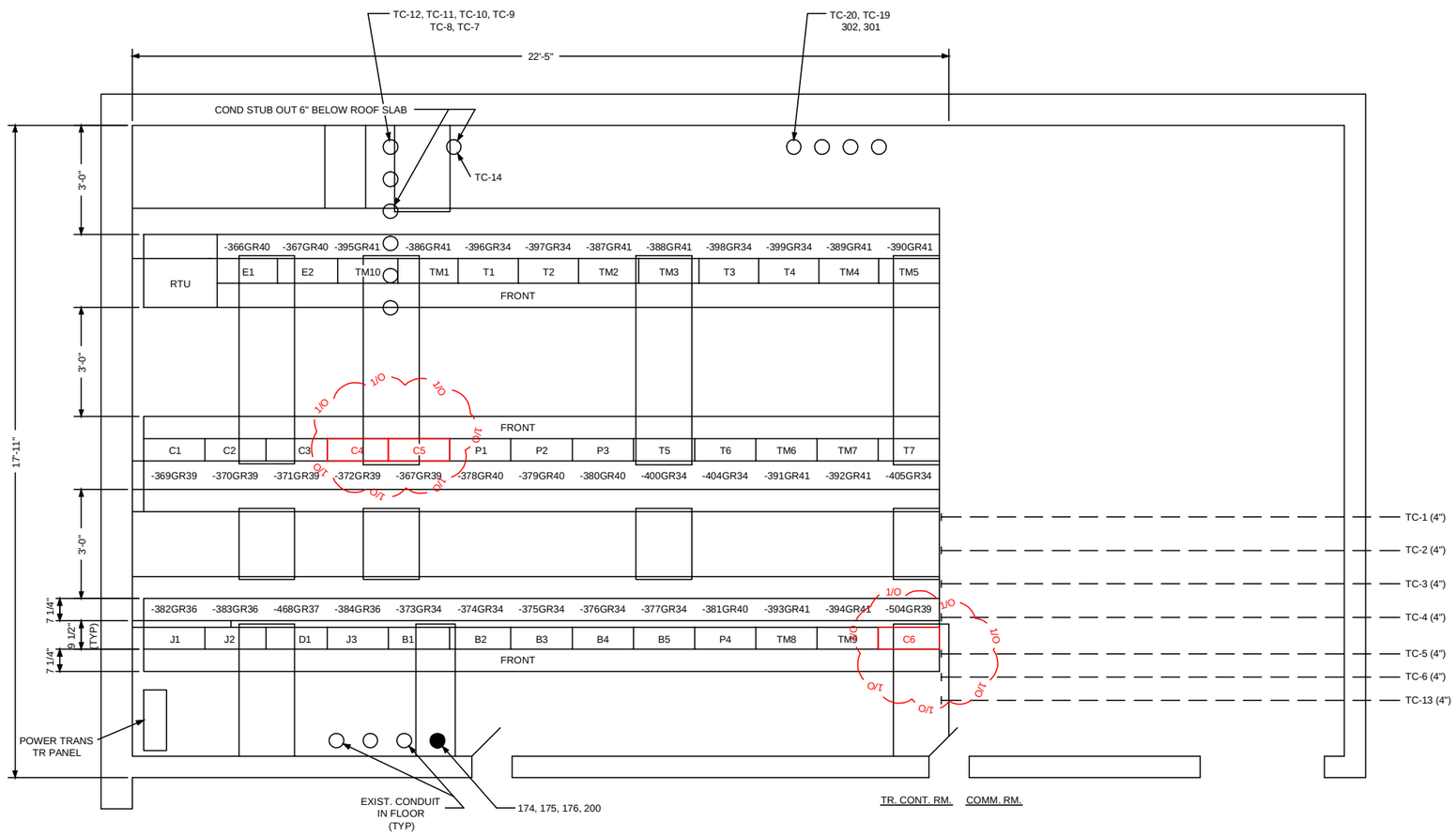

PLAN
1/2" = 1'-0" APPROX.

INDICATES CABLE TRAYS

NOTES:
1. RACK C4 HAS HAD ALL EQUIPMENT AND WIRING REMOVED. EMPTY RACK IS STILL IN PLACE AND CAN BE REMOVED.
2. RACK C5 HAS ALSTOM VPI REST MODULE AND ASSOCIATED EQUIPMENT. THIS IS NOT IN OPERATION AT THIS TIME.
3. RACK C6 HAS DAILY SAFETY TEST (DST) EQUIPMENT AND A DISPATCHER UNIT FOR TRACKS. THIS EQUIPMENT IS OBSOLETE AND NOT IN SERVICE AT THIS TIME.

O/T — O/T
1/O FQ16146 RED 1/O = IN
1/O — 1/O

FOR SURVEY REFERENCE ONLY

DESIGNED	JJB/RWL	11/8/74 DATE
DRAWN	P.D.	12/18/74 DATE
CHECKED	J.D.E.	5/7/75 DATE
APPROVED	L.J.K.	5/8/75 DATE
APPROVED GRS CO	V. KOVALCEK	2/22/78 DATE

REVISIONS

REV NO.	DATE	BY	DESCRIPTION	REV NO.	DATE	BY	DESCRIPTION
A	2/22/78	LRK	AS BUILT DRAWING	E	9/15/14	MEP	REVISED, FQ10063-CENI-34
B	9/21/84	RH	AS BUILT DRAWING (1Z2016)				
C	04/01/08	DAW	UPDATED FOR CONTRACT FO6026				
D	7/18/13	KDI	REDRAWN PER CONTRACT FQ11118				

WASHINGTON METROPOLITAN AREA TRANSIT AUTHORITY

THIS CONTENTS OF THIS DOCUMENT WERE DESIGNED AND PROVIDED BY OTHERS AND ARE NOT THE RESPONSIBILITY OF ANSALDO STS USA, INC.
—— WARNING ——
PRIOR TO PLACING THE CIRCUIT SET FORTH ON THIS DRAWING INTO REVENUE SERVICE, THE CIRCUIT AND THE COMPLETE SYSTEM OF WHICH THIS CIRCUIT IS A PART MUST BE TESTED AS FOLLOWS:
(A) CIRCUIT SELECTION (BREAKDOWN) TEST (B) SERVICE (OPERATION) TEST

GENERAL RAILWAY SIGNAL COMPANY
A UNIT OF GENERAL SIGNAL CORPORATION
ROCHESTER NEW YORK 14902

BY_____

INSTALLATION SKETCH:
TRAIN CONTROL ROOM SPACE REQUIREMENTS

LOCATION: NATIONAL AIRPORT 1Z2016
AUTOMATIC TRAIN CONTROL 1Z2011

SCALE	DRAWING NO.	PAGE NO.
NONE	C10-G-17	

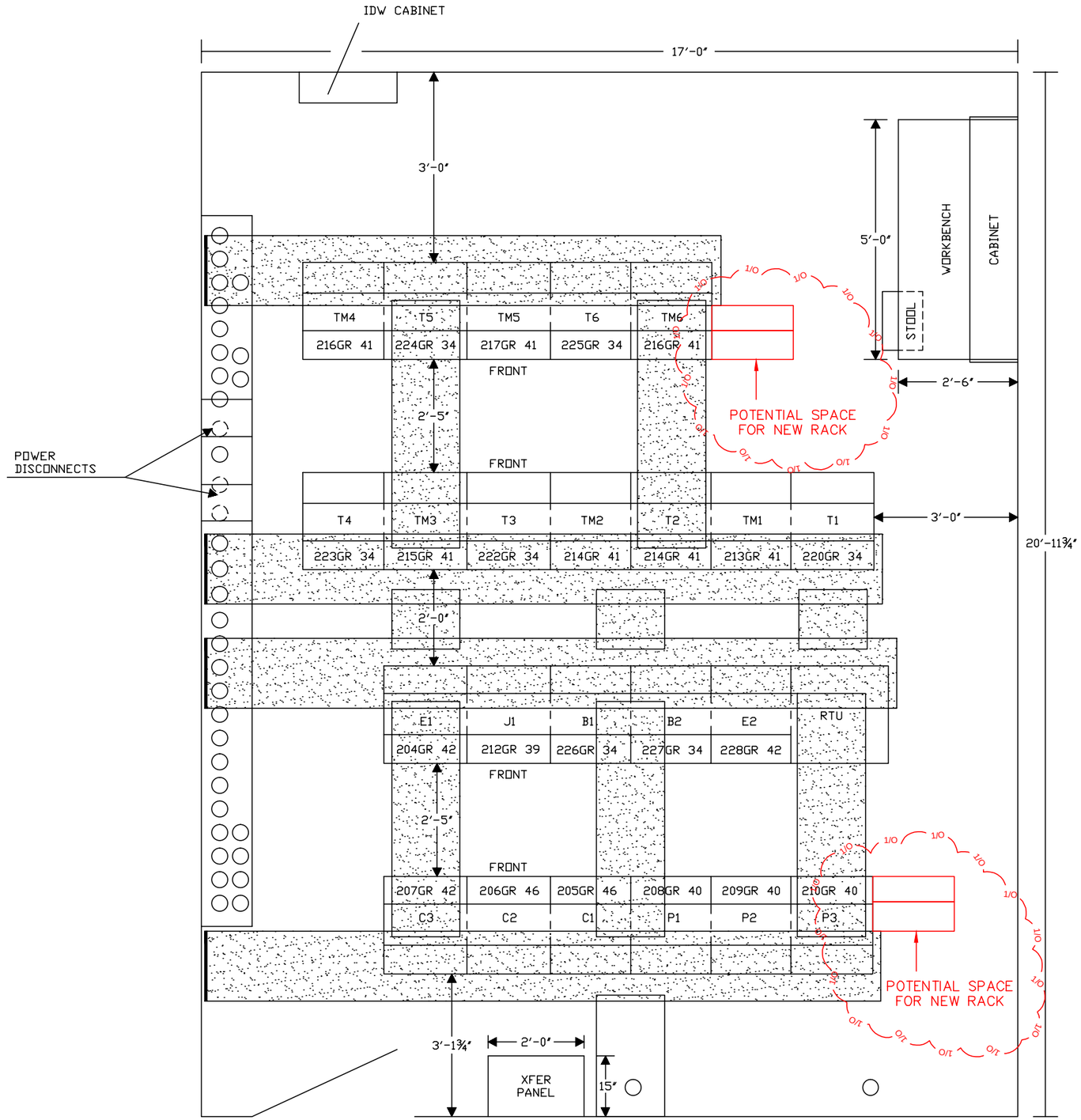

FOR SURVEY REFERENCE ONLY

DESIGNED	Ray Perrone	5-15-80 DATE
DRAWN	K G Singal	5-15-80 DATE
CHECKED	F.C. Oldfield	7-18-80 DATE
APPROVED	D.J. Mondy	7-25-80 DATE
APPROVED GRS CO.	H.O. Smallenburg	3-18-83 DATE

REVISIONS

REV. NO.	DATE	BY	DESCRIPTION	REV. NO.	DATE	BY	DESCRIPTION
A	3-18-83	KAD	AS BUILT DRAWING				
B	12-14-12	MEP	REDRAWN, FQ10063-CENI-10				

WASHINGTON METROPOLITAN AREA TRANSIT AUTHORITY

GENERAL RAILWAY SIGNAL COMPANY
A UNIT OF GENERAL SIGNAL CORPORATION
ROCHESTER NEW YORK 14602

BY_____

INSTALLATION SKETCH
TRAIN CONTROL ROOM
SPACE REQUIREMENTS

91-80902

LOCATION: BRADDOCK ROAD
AUTOMATIC TRAIN CONTROL

DEC 5, 1983

1Z2016

SCALE	DRAWING NO.	PAGE NO.
	C12-G-10	ATC-D57-51

ATC STANDARD DRAWINGS

DESIGNED	ACC	03-02-2017 DATE
DRAWN	DMR	03-02-2017 DATE
CHECKED		DATE
APPROVED		DATE

REFERENCE DRAWINGS

NUMBER	DESCRIPTION

REVISIONS

DATE	BY	DESCRIPTION
03/02/2017	MM	CREATED FOR CONTRACT FQ15192

WASHINGTON METROPOLITAN TRANSIT AUTHORITY

DEPARTMENT OF TRANSIT INFRASTRUCTURE AND ENGINEERING SERVICES
OFFICE OF THE CHIEF ENGINEER, INFRASTRUCTURE

SUBMITTED _____ DATE

APPROVED _____ DIRECTOR MAY 3, 2001 DATE

COVER PAGE
ATC STANDARD DRAWINGS

SCALE

DRAWING NO. ST-ATC-IDX-000

SHEET NO.

ADDENDUM #4 DRAWING NUMBER	ORIGINAL RFP DRAWING NUMBER	REV	TITLE
ST-ATC-IDX-000	NEW PAGE	A	COVER PAGE – ATC STANDARD DRAWINGS
ST-ATC-IDX-001	ST-TC-IX-002	B	*INDEX OF DRAWINGS (SHEET 1 OF 4)*
ST-ATC-IDX-002	ST-TC-IX-003	B	*INDEX OF DRAWINGS (SHEET 2 OF 4)*
ST-ATC-IDX-003	ST-TC-IX-004	B	*INDEX OF DRAWINGS (SHEET 3 OF 4)*
ST-ATC-IDX-004	ST-TC-IX-005	B	*INDEX OF DRAWINGS (SHEET 4 OF 4)*
ST-ATC-GEN-000	ST-TC-INF-000	A	COVER PAGE – INFORMATION DRAWINGS
ST-ATC-GEN-001	ST-TC-G-021	A	TYPICAL TRACK PLAN ABBREVIATIONS, SYMBOLS AND INSTALLATION DATA
ST-ATC-GEN-002	ST-TC-G-022	A	TYPICAL ELECTRICAL SYMBOLS
ST-ATC-GEN-003	ST-TC-G-025	A	TYPICAL RELAY/CONTACT LOCATION CHART FORMAT
ST-ATC-GEN-004	ST-TC-G-026	A	DATA SHEET FORMAT – SAFE BRAKING TESTS
ST-ATC-GEN-005	ST-TC-G-031	A	TYPICAL ATC WAYSIDE CABLE PLAN
ST-ATC-GEN-006	ST-TC-G-035	A	TYPICAL IMPEDANCE BOND LAYOUT FOR DIRECT FIXATION TO CONCRETE
~~ST-ATC-GEN-007~~	ST-TC-014	~~A~~	~~TYPICAL IMPEDANCE BOND INSTALLATION, AERIAL STRUCTURES~~
ST-ATC-GEN-008	ST-TC-G-036	D	*TYPICAL IMPEDANCE BOND "T" CONNECTOR AND TWO HOLE TUBE CRIMP LUG CONNECTION TO RAIL*
ST-ATC-GEN-009	ST-TC-G-037	B	*TYPICAL HIGH CURRENT IMPEDANCE BOND, NEGATIVE RETURN BONDING DIAGRAM*
ST-ATC-GEN-010	ST-TC-G-038	A	TYPICAL INTERLOCKING WRAP BONDING
ST-ATC-GEN-011	ST-TC-G-039	A	TYPICAL MARKER COIL LAYOUTS – DIRECT FIXATION AND BALLASTED TRACK
ST-ATC-GEN-012	ST-TC-G-041	B	*TYPICAL LARGE JUNCTION BOX PLAN*
ST-ATC-GEN-013	ST-TC-G-042	B	*TYPICAL SMALL JUNCTION BOX PLAN*
~~ST-ATC-GEN-014~~	ST-TC-G-045	~~A~~	~~TYPICAL START ATC – END ATC SIGN LAYOUTS~~
ST-ATC-GEN-015	ST-TC-G-046	A	TYPICAL STATION STOP AND TURNBACK SIGN LAYOUTS
ST-ATC-GEN-016	ST-TC-G-047	A	TYPICAL BERTHING MARKER LAYOUTS
ST-ATC-GEN-017	ST-TC-G-049	A	TYPICAL FOUNDATIONS FOR SIGNAL, SIGN AND PUSHBUTTON LAYOUTS

ADDENDUM #4 DRAWING NUMBER	ORIGINAL RFP DRAWING NUMBER	REV	TITLE
ST-ATC-GEN-018	ST-TC-G-051	A	TYPICAL PLATFORM EDGELIGHT AND PROGRAM STOP TRAIN PLACEMENT DIAGRAM
~~ST-ATC-GEN-019~~	ST-TC-G-056	~~A~~	~~TYPICAL ALARM AND/OR TRACK INDICATION PANEL~~
ST-ATC-GEN-020	ST-TC-G-061	A	TYPICAL ATP TRACK MODULE BLOCK DIAGRAM
~~ST-ATC-GEN-021~~	ST-TC-G-062	~~A~~	~~TYPICAL ATP SLAVE TRANSMITTER BLOCK DIAGRAM~~
ST-ATC-GEN-022	ST-TC-G-064	A	TYPICAL TWC TRANSMITTER BLOCK DIAGRAM
ST-ATC-GEN-023	ST-TC-G-065	A	TYPICAL TWC RECEIVER BLOCK DIAGRAM
~~ST-ATC-GEN-024~~	ST-TC-G-066	~~A~~	~~TYPICAL TWC FLYBY TRANSMITTER BLOCK DIAGRAM~~
~~ST-ATC-GEN-025~~	ST-TC-G-070	~~A~~	~~TYPICAL EXISTING RTU BLOCK DIAGRAM~~
ST-ATC-GEN-026	ST-TC-CE-030	A	ATC CLEARANCE ENVELOPE
ST-ATC-GEN-027	ST-TC-HDO-031	A	HORIZONTAL LIMITS OF DYNAMIC OUTLINE OF DESIGN VEHICLE THROUGH TURNOUTS
ST-ATC-CKT-000	ST-TC-C-001	A	COVER PAGE – TYPICAL CIRCUITS – GENERAL
ST-ATC-CKT-001	ST-TC-C-002	A	TYPICAL PLATFORM EDGELIGHT CONTROL CIRCUIT (SHEET 1 OF 2)
ST-ATC-CKT-002	ST-TC-C-003	A	TYPICAL PLATFORM EDGELIGHT CONTROL CIRCUITS (SHEET 2 OF 2)
ST-ATC-CKT-003	ST-TC-C-004	B	*TYPICAL PROGRAM STOP CONTROL CIRCUITS*
ST-ATC-CKT-004	ST-TC-C-005	B	*TYPICAL PROGRAM STOP MARKER CONTROL CIRCUITS*
ST-ATC-CKT-005	ST-TC-C-006	B	*TYPICAL DOOR AND DWELL CONTROL CIRCUITS*
~~ST-ATC-CKT-006~~	ST-TC-C-008	~~A~~	~~TYPICAL DOOR AND DWELL CONTROL CIRCUITS – TRACK 1 (TAIL-TRACK TERMINALS)~~
~~ST-ATC-CKT-007~~	ST-TC-C-009	~~A~~	~~TYPICAL DOOR AND DWELL CONTROL CIRCUITS – TRACK 2 (TAIL-TRACK TERMINALS)~~
~~ST-ATC-CKT-008~~	ST-TC-C-011	~~A~~	~~TYPICAL NEXT SIGN CONTROL CIRCUITS (TERMINALS)~~
ST-ATC-CKT-009	ST-TC-C-016	A	TYPICAL TWC FLYBY TRANSMITTER CIRCUITS
ST-ATC-CKT-010	ST-TC-C-018	A	TYPICAL TWC XMTR – RCVR INTERFACE CIRCUITS
ST-ATC-CKT-011	ST-TC-C-020	A	TYPICAL TWC SELECTION CIRCUITS
~~ST-ATC-CKT-012~~	ST-TC-C-022	~~A~~	~~TYPICAL EXISTING RTU BLOCK DIAGRAM~~

~~STRIKE THROUGH~~ = DRAWINGS NOT NEEDED FOR FQ16146 POTOMAC YARD PASSENGER STATION PROJECT

ASTERISK = DRAWING CONTENT REVISED FOR ADDENDUM #4

DESIGNED GAH 2-00 DATE
DRAWN JMR 2-00 DATE
CHECKED DATE
APPROVED DATE

REFERENCE DRAWINGS

NUMBER	DESCRIPTION

REVISIONS

DATE	BY	DESCRIPTION
08/2001	SYSP	Revised and issued by the Authority
04/20/2017	MM	REVISED FOR CONTRACT FQ16146

WASHINGTON METROPOLITAN TRANSIT AUTHORITY

DEPARTMENT OF TRANSIT INFRASTRUCTURE AND ENGINEERING SERVICES
OFFICE OF THE CHIEF ENGINEER, INFRASTRUCTURE

SUBMITTED DATE

APPROVED DIRECTOR MAY 3, 2001 DATE

INDEX OF DRAWINGS
(SHEET 1 OF 4)

SCALE

DRAWING NO. ST-ATC-IDX-001

SHEET NO.

ADDENDUM #4 DRAWING NUMBER	ORIGINAL RFP DRAWING NUMBER	REV	TITLE
ST-ATC-CKT-013	ST-TC-C-023	B	*TYPICAL TEMPORARY SPEED RESTRICTION ALARM CIRCUITS*
ST-ATC-CKT-014	ST-TC-C-024	A	TYPICAL REPEATER RELAY WIRING AND NOMENCLATURE
ST-ATC-CKT-015	ST-TC-C-036	A	TYPICAL OUTBOUND TRAIN APPROACH WARNING CIRCUITS/LOGIC
ST-ATC-CKT-016	ST-TC-A5-G-001	A	COVER SHEET (WMATA CLEVELAND PARK A05 EXAMPLE LOCATION)
~~ST-ATC-CKT-017~~	ST-TC-A5-C-001	~~A~~	~~PLATFORM TRACK REPEATER CIRCUITS~~
~~ST-ATC-CKT-018~~	ST-TC-A5-C-003	~~A~~	~~SPEED COMMAND HD LINE CIRCUITS – TRACK 1~~
~~ST-ATC-CKT-019~~	ST-TC-A5-C-004	~~A~~	~~SPEED COMMAND HD LINE CIRCUITS – TRACK 2~~
~~ST-ATC-CKT-020~~	ST-TC-A5-C-005	~~A~~	~~LINE TRACK REPEATER DECODE CIRCUITS– TRACK 1~~
~~ST-ATC-CKT-021~~	ST-TC-A5-C-006	~~A~~	~~LINE TRACK REPEATER DECODE CIRCUITS– TRACK 2~~
~~ST-ATC-CKT-022~~	ST-TC-A5-C-007	~~A~~	~~TRAFFIC INITIATION & CONTROL LINE CIRCUITS – TRACK 1 & 2~~
~~ST-ATC-CKT-023~~	ST-TC-A5-C-009	~~A~~	~~LINE REPEATER CIRCUITS~~
ST-ATC-CKT-024	ST-TC-A5-S-005	A	SPEED LIMIT COMMAND CIRCUIT A1-161-163 QR
~~ST-ATC-CKT-025~~	ST-TC-A5-S-024	~~A~~	~~BRIDGING RECEIVER TRACK CIRCUITS A1-165, A1-168R & A1-170R~~
~~ST-ATC-CKT-026~~	ST-TC-A6-G-001	~~A~~	~~COVER SHEET (WMATA VAN NESS – UDC A06 EXAMPLE LOCATOIN)~~
~~ST-ATC-CKT-027~~	ST-TC-A6-G-007	~~A~~	~~ATP SPEED COMMANDS CONTROL LINE DIAGRAM A – ROUTE~~
~~ST-ATC-CKT-028~~	ST-TC-A6-G-008	~~A~~	~~ATP SPEED COMMANDS CONTROL LINE DIAGRAMS A – ROUTE~~
~~ST-ATC-CKT-029~~	ST-TC-A6-S-002	~~A~~	~~SPEED LIMIT COMMAND CIRCUIT A1-179-184 QR~~
~~ST-ATC-CKT-030~~	ST-TC-A6-S-004	~~A~~	~~SPEED LIMIT COMMAND CIRCUIT A1-187-190 QR~~
~~ST-ATC-CKT-031~~	ST-TC-A6-S-005	~~A~~	~~SPEED LIMIT COMMAND CIRCUIT A1-190R-3NA QRX~~
~~ST-ATC-CKT-032~~	ST-TC-A6-S-006	~~A~~	~~SPEED LIMIT COMMAND CIRCUIT A1-3RA-1NA QR~~
~~ST-ATC-CKT-033~~	ST-TC-A6-S-007	~~A~~	~~SPEED LIMIT COMMAND CIRCUIT A1-1RA-197 QR~~
ST-ATC-IC-000	ST-TC-I-000	A	COVER PAGE – TYPICAL INTERLOCKING CIRCUITS
ST-ATC-IC-001	ST-TC-I-001	A	TYPICAL PUSHBUTTON AND FLEETING CIRCUITS SIGNALS 2, 4, 6 & 8

ADDENDUM #4 DRAWING NUMBER	ORIGINAL RFP DRAWING NUMBER	REV	TITLE
ST-ATC-IC-002	ST-TC-I-002	A	TYPICAL TURNBACK PUSHBUTTON AND FLEETING CIRCUITS SIGNALS 10, 14, 20, & 24
~~ST-ATC-IC-003~~	ST-TC-I-007	~~A~~	~~TYPICAL WAYSIDE PUSHBUTTON STORAGE CIRCUITS – SIGNAL 2~~
~~ST-ATC-IC-004~~	ST-TC-I-008	~~A~~	~~TYPICAL WAYSIDE PUSHBUTTON STORAGE CIRCUITS – SIGNAL 4~~
~~ST-ATC-IC-005~~	ST-TC-I-009	~~A~~	~~TYPICAL WAYSIDE PUSHBUTTON STORAGE CIRCUITS – SIGNAL 6~~
~~ST-ATC-IC-006~~	ST-TC-I-010	~~A~~	~~TYPICAL WAYSIDE PUSHBUTTON STORAGE CIRCUITS – SIGNAL 8~~
~~ST-ATC-IC-007~~	ST-TC-I-011	~~A~~	~~TYPICAL TIMER CANCEL CIRCUITS FOR SIGNALS HAVING WAYSIDE PUSHBUTTON CONTROL~~
ST-ATC-IC-008	ST-TC-I-013	A	TYPICAL ROUTE STORAGE CIRCUITS
ST-ATC-IC-009	ST-TC-I-016	A	TYPICAL ROUTE STORAGE CIRCUITS (SHEET 1 OF 2)
ST-ATC-IC-010	ST-TC-I-017	A	TYPICAL ROUTE STORAGE CIRCUITS (SHEET 2 OF 2)
ST-ATC-IC-011	ST-TC-I-021	A	TYPICAL ROUTE INITIATION CIRCUITS (EMERGENCY CROSS-OVER)
ST-ATC-IC-012	ST-TC-I-023	A	TYPICAL ROUTE INITIATION CIRCUITS (TERMINAL CROSS-OVER)
ST-ATC-IC-013	ST-TC-I-024	A	TYPICAL ROUTE INITIATION & RESET STICK CANCEL CIRCUITS
ST-ATC-IC-014	ST-TC-I-025	A	TYPICAL ROUTE INITIATION & RESET STICK CANCEL CIRCUITS
~~ST-ATC-IC-015~~	ST-TC-I-027	~~A~~	~~TYPICAL AUTOMATIC ROUTE INITIATION STICK CIRCUITS – SIGNALS 2, 6 & 8~~
ST-ATC-IC-016	ST-TC-I-029	A	TYPICAL ROUTE COMPLETION CIRCUITS
ST-ATC-IC-017	ST-TC-I-031	A	TYPICAL ROUTE CHECK CIRCUITS
ST-ATC-IC-018	ST-TC-I-035	A	TYPICAL APPROACH STICK CIRCUITS
ST-ATC-IC-019	ST-TC-I-036	A	TYPICAL ROUTE STICK & APPROACH CIRCUITS
~~ST-ATC-IC-020~~	ST-TC-I-037	~~A~~	~~TYPICAL ROUTE STICK & APPROACH CIRCUITS~~
~~ST-ATC-IC-021~~	ST-TC-I-039	~~A~~	~~TYPICAL AUTOMATIC SIGNAL OPERATION SELECTION CIRCUITS – SIGNALS 2, 6 & 8~~
ST-ATC-IC-022	ST-TC-I-041	A	TYPICAL SWITCH CONTROL & CORRESPONDENCE CIRCUITS – 1 SWITCH (CROSS-OVER)
ST-ATC-IC-023	ST-TC-I-042	A	TYPICAL SWITCH CONTROL & CORRESPONDENCE CIRCUITS – 3 SWITCH (CROSS-OVER)
ST-ATC-IC-024	ST-TC-I-043	B	*TYPICAL SWITCH OPERATING & REPEATER CIRCUITS*
ST-ATC-IC-025	ST-TC-I-045	A	TYPICAL REPEATER CIRCUITS

~~STRIKE THROUGH~~ = DRAWINGS NOT NEEDED FOR FQ16146 POTOMAC YARD PASSENGER STATION PROJECT

ASTERISK = DRAWING CONTENT REVISED FOR ADDENDUM #4

DESIGNED	GAH	2-00 DATE
DRAWN	JMR	2-00 DATE
CHECKED		DATE
APPROVED		DATE

REFERENCE DRAWINGS

NUMBER	DESCRIPTION

REVISIONS

DATE	BY	DESCRIPTION
08/2001	SYSP	Revised and issued by the Authority
04/21/2017	MM	REVISED FOR CONTRACT FQ16146

WASHINGTON METROPOLITAN TRANSIT AUTHORITY

DEPARTMENT OF TRANSIT INFRASTRUCTURE AND ENGINEERING SERVICES
OFFICE OF THE CHIEF ENGINEER, INFRASTRUCTURE

SUBMITTED _____ DATE

APPROVED DIRECTOR _____ MAY 3, 2001 DATE

INDEX OF DRAWINGS
(SHEET 2 OF 4)

SCALE

DRAWING NO. ST-ATC-IDX-002

SHEET NO.

ADDENDUM #4 DRAWING NUMBER	ORIGINAL RFP DRAWING NUMBER	REV	TITLE
ST-ATC-IC-026	ST-TC-I-046	B	*TYPICAL SPEED COMMAND LOOP CONTROL STICK CIRCUITS (AUDIO FREQUENCY)*
ST-ATC-IC-027	NEW PAGE	A	TYPICAL SPEED COMMAND LOOP CONTROL STICK CIRCUITS (POWER FREQUENCY)
~~ST-ATC-IC-028~~	ST-TC-I-047	~~B~~	~~TYPICAL SPEED COMMAND LOOP SEL. CIRCUITS, 4 FT. LOOPS & CROSS-OVER LOOPS (AUDIO FREQUENCY)~~
ST-ATC-IC-029	NEW PAGE	A	TYPICAL SPEED COMMAND LOOP CIRCUITS, LONG WIRE LOOPS (POWER FREQUENCY)
~~ST-ATC-IC-030~~	ST-TC-I-048	~~A~~	~~TYPICAL TRACK AND SPEED COMMAND LOOP CIRCUITS – 2 FOOT LOOPS~~
ST-ATC-IC-031	ST-TC-I-061	A	TYPICAL SIGNAL CONTROL CIRCUITS (CROSS-OVER INTERLOCKINGS)
ST-ATC-IC-032	ST-TC-I-062	A	TYPICAL SIGNAL REPEATER CIRCUITS (EMERGENCY CROSS-OVER)
ST-ATC-IC-033	ST-TC-I-064	A	TYPICAL SIGNAL REPEATER CIRCUITS (TERMINAL CROSS-OVER)
ST-ATC-IC-034	ST-TC-I-065	A	TYPICAL VITAL AC TRACK RELAY CIRCUIT CONFIGURATIONS
ST-ATC-IC-035	ST-TC-I-066	B	*TYPICAL SIGNAL LIGHTING CIRCUITS*
~~ST-ATC-IC-036~~	ST-TC-I-067	~~A~~	~~TYPICAL MARKER SIGNAL LIGHTING CIRCUITS~~
~~ST-ATC-IC-037~~	ST-TC-I-069	~~B~~	~~TYPICAL DETECTOR TRACK REPEATER CIRCUITS (AUDIO FREQUENCY)~~
ST-ATC-IC-038	NEW PAGE	A	TYPICAL DETECTOR TRACK REPEATER CIRCUITS (POWER FREQUENCY)
~~ST-ATC-IC-039~~	ST-TC-I-071	~~A~~	~~TYPICAL LOCAL/REMOTE SELECTION CIRCUITS – (NON-TERMINAL INTERLOCKINGS)~~
~~ST-ATC-IC-040~~	ST-TC-I-072	~~A~~	~~TYPICAL LOCAL/REMOTE SELECTION CIRCUITS (TERMINALS)~~
~~ST-ATC-IC-041~~	ST-TC-I-074	~~A~~	~~TYPICAL TERMINAL MODE SELECTION CIRCUITS~~
~~ST-ATC-IC-042~~	ST-TC-I-077	~~A~~	~~TYPICAL LOCAL/REMOTE LOCKOUT CIRCUITS~~
ST-ATC-IC-043	ST-TC-I-079	A	TYPICAL LOCAL, REMOTE, PANEL & FLASHING B28G ENERGY DISTRIBUTION
ST-ATC-IC-044	ST-TC-I-081	A	TYPICAL AUXILIARY SWITCH PUSHBUTTON AND SWITCH POSITION INDICATION CIRCUITS
ST-ATC-IC-045	ST-TC-I-082	A	TYPICAL AUXILIARY SWITCH PUSHBUTTON AND SWITCH POSITION INDICATION CIRCUITS (SWITCH 3)
ST-ATC-IC-046	ST-TC-I-085	A	TYPICAL INTERLOCKING CONTROL PANEL INDICATION CIRCUITS, TRACK OCCUPANCY AND TRAFFIC
ST-ATC-IC-047	ST-TC-I-086	A	TYPICAL INTERLOCKING CONTROL PANEL INDICATION CIRCUITS, SIGNAL FLEETING AND ROUTE
ST-ATC-IC-048	ST-TC-P-008	A	TYPICAL SNOWMELTER CONTROL CASE CIRCUITS
~~ST-ATC-IC-049~~	ST-TC-P-009	~~A~~	~~TYPICAL ALARM AND/OR TRACK INDICATION PANEL – INTERNAL CIRCUITS~~

ADDENDUM #4 DRAWING NUMBER	ORIGINAL RFP DRAWING NUMBER	REV	TITLE
ST-ATC-IEQ-000	ST-TC-I-100	A	COVER PAGE – TYPICAL EQUIPMENT LAYOUTS
~~ST-ATC-IEQ-001~~	ST-TC-019	~~A~~	~~SWITCH AND LOCK MOVEMENT DIRECT FIXATION FOR NUMBERS 8, 10 AND 15 TURNOUTS~~
~~ST-ATC-IEQ-002~~	ST-TC-I-101	~~C~~	~~TYPICAL INTERLOCKING CONFIGURATION (AUDIO FREQUENCY)~~
ST-ATC-IEQ-003	NEW PAGE	A	TYPICAL INTERLOCKING CONFIGURATION (POWER FREQUENCY)
~~ST-ATC-IEQ-004~~	ST-TC-I-103	~~A~~	~~TYPICAL INDUCTIVE TRACK LOOP LAYOUT – 4 FT LOOPS WITH IMPEDANCE BOND~~
~~ST-ATC-IEQ-005~~	ST-TC-I-104	~~A~~	~~TYPICAL INDUCTIVE TRACK LOOP LAYOUT – 2 FT LOOPS WITH SHUNT BAR~~
~~ST-ATC-IEQ-006~~	ST-TC-I-105	~~B~~	~~TYPICAL SPEED COMMAND CROSSOVER LOOP LAYOUT (AUDIO FREQUENCY)~~
ST-ATC-IEQ-007	NEW PAGE	A	TYPICAL SPEED COMMAND CROSSOVER LOOP LAYOUT (POWER FREQUENCY)
ST-ATC-IEQ-008	ST-TC-I-107	A	TYPICAL AC TRACK CIRCUIT CONNECTIONS
~~ST-ATC-IEQ-009~~	ST-TC-I-108	~~B~~	~~TYPICAL MAINLINE SIGNAL RAIL BONDING (AUDIO FREQUENCY TRACK CIRCUITS)~~
ST-ATC-IEQ-010	NEW PAGE	A	TYPICAL MAINLINE SIGNAL RAIL BONDING (POWER FREQUENCY TRACK CIRCUITS)
~~ST-ATC-IEQ-011~~	ST-TC-I-109	~~B~~	~~TYPICAL MAINLINE NEGATIVE RETURN BONDING (AUDIO FREQUENCY TRACK CIRCUITS)~~
ST-ATC-IEQ-012	NEW PAGE	A	TYPICAL MAINLINE NEGATIVE RETURN BONDING (POWER FREQUENCY TRACK CIRCUITS)
ST-ATC-IEQ-013	ST-TC-I-111	A	TYPICAL SWITCH-AND-LOCK MOVEMENT LAYOUT ON BALLASTED TRACK
~~ST-ATC-IEQ-014~~	ST-TC-I-112	~~A~~	~~TYPICAL SWITCH-AND-LOCK MOVEMENT LAYOUT – DIRECT FIXATION~~
ST-ATC-IEQ-015	ST-TC-I-114	B	*TYPICAL SNOWMELTER LAYOUT*
ST-ATC-IEQ-016	ST-TC-I-115	A	TYPICAL SNOWMELTERS CONTROL CASE
ST-ATC-IEQ-017	ST-TC-I-116	B	*TYPICAL SNOWMELTER HEATING ELEMENT MOUNTING DETAILS*
ST-ATC-IEQ-018	ST-TC-I-117	B	*TYPICAL SWITCH ROD HEATER LAYOUT ON BALLAST*
ST-ATC-IEQ-019	ST-TC-I-121	A	TYPICAL SIGNAL LAYOUTS
~~ST-ATC-IEQ-020~~	ST-TC-I-123	~~A~~	~~TYPICAL WAYSIDE PUSHBUTTON LAYOUT~~
ST-ATC-IEQ-021	ST-TC-I-131	B	*INTERLOCKING VITAL PROCESSOR SYSTEM FUNCTIONAL BLOCK DIAGRAM*

~~STRIKE THROUGH~~ = DRAWINGS NOT NEEDED FOR FQ16146 POTOMAC YARD PASSENGER STATION PROJECT

ASTERISK = DRAWING CONTENT REVISED FOR ADDENDUM #4

DESIGNED	GAH	2-00 DATE
DRAWN	JMR	2-00 DATE
CHECKED		DATE
APPROVED		DATE

REFERENCE DRAWINGS

NUMBER	DESCRIPTION

REVISIONS

DATE	BY	DESCRIPTION
08/2001	SYSP	Revised and issued by the Authority
04/21/2017	MM	REVISED FOR CONTRACT FQ15192

WASHINGTON METROPOLITAN TRANSIT AUTHORITY

DEPARTMENT OF TRANSIT INFRASTRUCTURE AND ENGINEERING SERVICES
OFFICE OF THE CHIEF ENGINEER, INFRASTRUCTURE

SUBMITTED _____ DATE

APPROVED DIRECTOR _____ MAY 3, 2001 DATE

INDEX OF DRAWINGS
(SHEET 3 OF 4)

SCALE

DRAWING NO. ST-ATC-IDX-003

SHEET NO.

ADDENDUM #4 DRAWING NUMBER	ORIGINAL RFP DRAWING NUMBER	REV	TITLE
~~ST-ATC-NVP-000~~	NEW PAGE	~~A~~	~~COVER PAGE – TYPICAL NON-VITAL PROCESSORS~~
~~ST-ATC-NVP-001~~	ST-TC-NVP-001	~~A~~	~~REMOTE TERMINAL UNIT TO TYPICAL NON-VITAL PROCESSOR OUTPUTS~~
~~ST-ATC-NVP-002~~	ST-TC-NVP-002	~~A~~	~~REMOTE TERMINAL UNIT TYPICAL NON-VITAL PROCESSOR INPUTS~~
ST-ATC-PWR-000	ST-TC-P-000	A	COVER PAGE – TYPICAL POWER DRAWINGS
ST-ATC-PWR-001	ST-TC-P-001	A	TYPICAL POWER DISTRIBUTION SCHEMATIC FOR TCRS
ST-ATC-PWR-002	ST-TC-P-002	A	TYPICAL DC POWER DISTRIBUTION
ST-ATC-PWR-003	ST-TC-P-003	A	TYPICAL UNINTERRUPTIBLE AC POWER DISTRIBUTION
~~ST-ATC-PWR-004~~	ST-TC-P-004	~~A~~	~~TYPICAL POWER FAILURE & BLOWN FUSE CIRCUITS (STATIONS WITHOUT INTERLOCKING)~~
ST-ATC-PWR-005	ST-TC-P-005	A	TYPICAL POWER FAILURE & BLOWN FUSE CIRCUITS (STATIONS WITH INTERLOCKING)
ST-ATC-PWR-006	ST-TC-P-006	A	TYPICAL GROUND DETECTOR CIRCUITS
ST-ATC-PWR-007	ST-TC-P-007	A	TYPICAL SNOWMELTER CONTROL & INDICATION CIRCUITS
~~ST-ATC-RTU-000~~	NEW PAGE	~~A~~	~~COVER PAGE – TYPICAL RTU CIRCUITS~~
~~ST-ATC-RTU-001~~	ST-TC-RTU-011	~~A~~	~~TYPICAL RTU WIRING COMM. ROOM, MAIN DISTRIBUTION FRAME~~
~~ST-ATC-RTU-002~~	ST-TC-RTU-012	~~A~~	~~TYPICAL RTU WIRING TC/COM INTERFACE CABINETS~~
~~ST-ATC-RTU-003~~	ST-TC-RTU-013	~~A~~	~~TYPICAL RTU WIRING TIE BREAKER STATIONS (SH. 1 OF 3)~~
~~ST-ATC-RTU-004~~	ST-TC-RTU-014	~~A~~	~~REMOTE TERMINAL UNIT TO TYPICAL TIE BREAKER STATIONS (SH. 2 OF 3)~~
~~ST-ATC-RTU-005~~	ST-TC-RTU-015	~~A~~	~~REMOTE TERMINAL UNIT TO TYPICAL TIE BREAKER STATIONS (SH. 3 OF 3)~~
~~ST-ATC-DTS-000~~	NEW PAGE	~~A~~	~~COVER PAGE – TYPICAL DTS CIRCUITS~~
~~ST-ATC-DTS-001~~	ST-TC-DTS-001	~~A~~	~~DATA TRANS. SYS. (DTS) INTERFACE CABINETS-CABINET DETAILS AND TERM. BLOCK ARRANGEMENT~~
~~ST-ATC-DTS-002~~	ST-TC-DTS-002	~~A~~	~~DATA TRANS. SYS. (DTS) INTERFACE CABINET VENT SHAFT & DRAINAGE PUMPING STATION~~
~~ST-ATC-DTS-003~~	ST-TC-DTS-003	~~A~~	~~DATA TRANS. SYS. (DTS) INTERFACE CABINET A.C. SERVICE/SWITCHBOARD ROOM (COMBINED)~~

ADDENDUM #4 DRAWING NUMBER	ORIGINAL RFP DRAWING NUMBER	REV	TITLE
~~ST-ATC-DTS-004~~	ST-TC-DTS-004	~~A~~	~~DATA TRANS. SYS. (DTS) INTERFACE CABINET A.C. SERVICE/SWITCHBOARD ROOM (NEAR)~~
~~ST-ATC-DTS-005~~	ST-TC-DTS-005	~~A~~	~~DATA TRANS. SYS. (DTS) INTERFACE CABINET A.C. SERVICE/SWITCHBOARD ROOM (FAR)~~
~~ST-ATC-DTS-006~~	ST-TC-DTS-006	~~A~~	~~DATA TRANS. SYS. (DTS) INTERFACE CABINET FAN SHAFT & JET FAN CONTROL ROOM~~
~~ST-ATC-DTS-007~~	ST-TC-DTS-007	~~A~~	~~DATA TRANS. SYS. (DTS) INTERFACE CABINET TRACTION POWER TIE BREAKER STATION~~
~~ST-ATC-DTS-008~~	ST-TC-DTS-008	~~A~~	~~DATA TRANS. SYS. (DTS) INTERFACE CABINET TRACTION POWER SUBSTATION (SHT. 1 OF 2)~~
~~ST-ATC-DTS-009~~	ST-TC-DTS-009	~~A~~	~~DATA TRANS. SYS. (DTS) INTERFACE CABINET TRACTION POWER SUBSTATION (SHT. 2 OF 2)~~
~~ST-ATC-TEL-000~~	NEW PAGE	~~A~~	~~COVER PAGE – TYPICAL MAINTENANCE TELEPHONE CIRCUITS~~
~~ST-ATC-TEL-001~~	ST-TC-TEL-001	~~A~~	~~TYPICAL TC MAINTENANCE TELEPHONE CIRCUITS – FOR WAYSIDE ATC EQUIPMENT~~
~~ST-ATC-TEL-002~~	ST-TC-TEL-002	~~A~~	~~TYPICAL TC MAINTENANCE TELEPHONE CIRCUITS – FOR TRAIN CONTROL ROOMS~~
~~ST-ATC-TEL-003~~	ST-TC-TEL-003	~~A~~	~~TYP. TC MAINT. TEL CKTS-FOR DTS INTERFACE JUNCTION BOXES & TC/COMM INTERFACE CABINET~~
DD-ATC-CND-000	NEW PAGE	A	COVER PAGE – DESIGN DRAWINGS
~~DD-ATC-CND-001~~	ST-TC-033	~~A~~	~~TYPICAL TRAIN CONTROL CONDUIT RISER DIAGRAM FOR PASSENGER STATION~~
~~DD-ATC-CND-002~~	ST-TC-037	~~A~~	~~TRAIN CONTROL CONDUIT RISER DIAGRAM AND REMOTE FACILITIES~~
DD-ATC-CND-003	ST-TC-040	B	*SWITCH MACHINE CLEARANCE & TUNNEL CONDUIT REQUIREMENTS*
DD-ATC-CND-004	ST-TC-041	B	*TRAIN CONTROL CONDUITS-AT GRADE*
DD-ATC-CND-005	ST-TC-042	B	*CONDUIT REQUIREMENTS FOR TURNOUTS AT GRADE*

~~STRIKE THROUGH~~ = DRAWINGS NOT NEEDED FOR FQ16146 POTOMAC YARD PASSENGER STATION PROJECT

ASTERISK = DRAWING CONTENT REVISED FOR ADDENDUM #4

DESIGNED	GAH	2-00 DATE
DRAWN	JMR	2-00 DATE
CHECKED		DATE
APPROVED		DATE

REFERENCE DRAWINGS

NUMBER	DESCRIPTION

REVISIONS

DATE	BY	DESCRIPTION
08/2001	SYSP	Revised and issued by the Authority
04/21/2017	MM	REVISED FOR CONTRACT FQ16146

WASHINGTON METROPOLITAN TRANSIT AUTHORITY

DEPARTMENT OF TRANSIT INFRASTRUCTURE AND ENGINEERING SERVICES
OFFICE OF THE CHIEF ENGINEER, INFRASTRUCTURE

SUBMITTED _____ DATE

APPROVED _____ DIRECTOR — MAY 3, 2001 DATE

INDEX OF DRAWINGS
(SHEET 4 OF 4)

SCALE

DRAWING NO. ST-ATC-IDX-004

SHEET NO.

WMATA

INFORMATION ONLY DRAWINGS

This Drawing Reflects a WMATA standard design approach. Project specific drawings must be developed by the Contractor which reflect this Design Philosophy

DESIGNED	GAH	6-00 DATE
DRAWN	JMR	6-00 DATE
CHECKED		DATE
APPROVED		DATE
UPDATED		DATE

REFERENCE DRAWINGS

NUMBER	DESCRIPTION

REVISIONS

DATE	BY	DESCRIPTION
08/2001	SYSP	Revised and issued by the Authority

WASHINGTON METROPOLITAN AREA TRANSIT AUTHORITY

DEPARTMENT OF TRANSIT SYSTEM DEVELOPMENT
OFFICE OF SYSTEMS

SUBMITTED _____ DATE

APPROVED _____ DIRECTOR May 3, 2001 DATE

INFORMATION DRAWINGS

SCALE NONE

DRAWING NO. ST-ATC-GEN-000

ABBREVIATIONS & SYMBOLS

AHD	AHEAD
AWS	ADVANCE WARNING SIGN
BK	BACK
CB	CROSS BOND
CB–CL	CROSS BOND CONDUIT LOCATION
C.C.	CURVE TO CURVE
COM	COMMUNICATIONS
D.G.R.	DUAL GUARD RAIL
C.S.	CURVE TO SPIRAL
EOP	END OF PLATFORM
EOT	END OF TRACK
G	SIGNAL
I.B.	INBOUND
ID	TRAIN IDENTITY
IJ	INSULATED JOINT
MAS	MAXIMUM ALLOWABLE SPEED
NIC	NOT INCLUDED IN CONTRACT
NTS	NOT TO SCALE
O.B.	OUTBOUND
PB	PUSHBUTTON
P.I.T.O.	POINT OF INTERSECTION OF TURNOUT
PS	POINT OF SWITCH
P.V.C.	POINT OF VERTICAL CURVE
P.V.I.	POINT OF VERTICAL INTERSECTION
P.V.T.	POINT OF VERTICAL TANGENT
RTU	REMOTE TERMINAL UNIT
S	SIGN
S.C.	SPIRAL TO CURVE
SSR–CL	SUBSTATION RETURN CONDUIT LOCATION
SSR	SUBSTATION RETURN
S.T.	SPIRAL TO TANGENT
STA	SURVEYOR'S STATIONING
TCER	TRAIN CONTROL EQUIPMENT ROOM
TCR	TRAIN CONTROL ROOM
TD	TRUE DISTANCE
T.S.	TANGENT TO SPIRAL
ZB	IMPEDANCE BOND
	STATIONING EQUATION
SS	SUBSTATION (SS)
TBS	TIE BREAKER STATION (TBS)
	FAN SHAFT (FS)
	VENT SHAFT (VS)
	SEWAGE EJECTOR (SEJ)
	DRAINAGE PUMPING STATION (DPS)
SP	SUMP PUMP
	CHILLED WATER PLANT (CHP)
	EMERGENCY EXIT (EE)
TCR	TRAIN CONTROL ROOM (TCR)
TCER	TRAIN CONTROL EQUIPMENT ROOM (SATELLITE TCR – NO RTU) (TCER)
COM	COMMUNICATIONS ROOM (COM)
AC	AC SERVICE ROOM (AC)
DTS	DATA TRANSMISSION SYSTEM JUNCTION BOX (CABINET)

IF C	INTERFACE CASE
SM C	SNOWMELTER CONTROL CASE
TC C	TRAIN CONTROL EQUIPMENT CASE
BJ	TERMINATING RECEIVER JUNCTION BOX
CJ	LOOP COUPLING UNIT JUNCTION BOX
DJ	DISTRIBUTION JUNCTION BOX
GJ	SIGNAL JUNCTION BOX
IFJ	INTERFACE JUNCTION BOX
IJ	INTERLOCKING JUNCTION BOX
LNJ	LINE JUNCTION BOX
LJ	LOOP JUNCTION BOX
MJ	PROGRAM STOP MARKER JUNCTION BOX
SZJ	IDW SUB–ZONE JUNCTION BOX
TJ	TRACK JUNCTION BOX
WJ	SWITCH JUNCTION BOX

SIGNS, SIGNALS, AND PUSHBUTTONS

R 4 N — TRAIN BERTHING SIGN (MOUNTED UNDER PLATFORM)
(NUMBER IN BOX INDICATES NO. OF CARS IN TRAINS TO BE STOPPED AT THAT POINT)
(N = SIGN FOR NORMAL DIRECTION)
(R = SIGN FOR REVERSE DIRECTION)

MAST MOUNTED		WALL MOUNTED
S	WAYSIDE SIGN MARKING THE OUTERMOST STATION STOPPING MARKER	S
TB	TURNBACK SIGN	TB
ATC S	START ATC SIGN	ATC S
ATC E	END ATC SIGN	ATC E
	CONTROLLED SIGNAL	
	MARKER SIGNAL	
	PUSHBUTTON BOX (ROUTE SELECTION)	

	PLATFORM ROUTE–CANCEL PUSHBUTTON (NO LONGER USED)
	MANHOLE IN DUCT BANK (BY OTHERS)
	SWITCH MACHINE (SWITCH–AND–LOCK MOVEMENT)
P.V.I.	POINT OF VERTICAL INTERSECTION
	WAYSIDE IMPEDANCE BOND (ZB)
FR	FLY–BY RECEIVER
FT	FLY–BY TRANSMITTER
DR	DISPATCH RECEIVER
	CROSSBOND LOCATION (CONDUIT RUN ON LEFT – STUBS UP TO RIGHT) (CB–CL)

	TRACK WITH DUAL GUARD RAIL
	TRACK WITH SINGLE GUARD RAIL OR RESTRAINING RAIL
SSR	SUBSTATION RETURN LOCATION – CONDUITS STUBBED UP TO LEFT
	MARKER COIL PAIR (FIXED FREQUENCY)
V	MARKER COIL PAIR (VARIABLE FREQUENCY)
	LOOP, INDUCTIVE TRACK
B R	TERMINATING RECEIVER
A2–137	TRACK CIRCUIT NAME – DERIVED FROM TRACK NUMBER AND STATIONING AT INBOUND END OF TRACK CIRCUIT.
	TUNNEL PORTAL (TUNNEL TO RIGHT)
	INSULATED JOINTS (TRACK CIRCUITS BOTH DIRECTIONS)
	INSULATED JOINTS (TRACK CIRCUITS TO RIGHT ONLY)
	BUMPING POST
	COMPRESSION–BOLTED NEGATIVE–RETURN RAIL WEB BONDING AROUND INSULATED JOINTS
	TEMPORARY 1000 KCMIL BASE–OF–RAIL CLAMPED NEGATIVE RETURN BONDING AROUND IJs
	WAYSIDE IMPEDANCE BOND WITH SHUNT BAR TO RIGHT OF IJs
	SINGLE TURNOUT, SWITCH–AND–LOCK MOVEMENT NORMALLY SET FOR STRAIGHT TRACK – WITH BASE–OF–RAIL CLAMPED 1000 KCMIL BONDING BETWEEN STOCK RAILS
	SINGLE TURNOUT, SWITCH–AND–LOCK MOVEMENT NORMALLY SET FOR DIVERGING TRACK

R=800' 40/45 MPH

HORIZONTAL CURVE IN CLOCKWISE DIRECTION FOR TRAFFIC FROM LEFT TO RIGHT; CURVE RADIUS = 800 FT; CIVIL SPEED LIMIT (Vc)/SAFETY SPEED LIMIT (Vs). THE SAFETY SPEED LIMIT SHALL NOT EXCEED 75 MPH.

$$Vs = Vc\sqrt{1 + \frac{2}{Ea + Eu}}$$

WHERE: Ea = ACTUAL SUPERELEVATION
Eu = UNCOMPENSATED SUPERELEVATION

0.350% — DENOTES SLOPE AND PERCENT GRADE

MARKERS

MARKER LAYOUTS ARE USED TO INDICATE DISTANCE TO CENTERLINE OF STATION AND TYPE OF STATION STOP. ALL MARKER UNITS CONSIST OF A PAIR OF MARKER COILS, EXCEPT FOR THE SINGLE–COIL PLATFORM MARKERS.

(2) THIS SYMBOL INDICATES A MARKER COIL. THE NUMBER WITHIN THE CIRCLE IS THE FREQUENCY NUMBER. THIS IS A FIXED FREQUENCY COIL TUNED TO FREQUENCY 2.

(V) THIS INDICATES A VARIABLE FREQUENCY MARKER COIL. THIS MARKER COIL IS USED FOR STATION STOPPING INSTRUCTIONS.

THE COILS ARE MOUNTED ON THE CENTERLINE OF THE TRACK, EXCEPT ON CURVES WITH A RADIUS LESS THAN 8500 FT. THE COILS ARE THEN OFFSET IN THE DIRECTION AND DISTANCE SHOWN ON THE TRACK PLAN.

THE MOUNTING CENTERS OF A MARKER PAIR SHALL BE LOCATED NOT LESS THAN 4 FT. APART AND NOT MORE THAN 8 FT. APART. BETWEEN SETS OF ADJACENT MARKER PAIRS, THE CENTERS OF THE CLOSEST COILS SHALL BE NO CLOSER THAN 12 FT. A MINIMUM OF 1 1/2 FT. MUST BE MAINTAINED BETWEEN THE CENTER OF A MARKER COIL AND ANY HEAVY METALLIC OBJECT.

STATION STOPPING

ALL TWO–COIL STATION STOPPING MARKER UNITS ARE POSITIONED FROM THE CENTERLINE OF THE STATION TO THE CENTERLINE OF THE OUTERMOST COIL OF THE PAIRS. THE ARROW INDICATES THE DIRECTION OF TRAVEL FOR WHICH THE MARKER APPLIES.

(1)(8)→ OUTER MARKER LOCATED AT 2700 (+20,–0) FT. FROM PSGR. STA. ℄

(2)(V)→ MIDDLE MARKER LOCATED AT 1200 (+20,–0) FT. FROM PSGR. STA. ℄

(3)(V)→ INNER MARKER LOCATED AT 484 (+0,–20) FT. FROM PSGR. STA. ℄

(4) PLATFORM MARKER LOCATED AT 160 ± 1/2 FT. FROM PSGR. STA. ℄

THE MARKERS SHALL BE LOCATED WHERE SHOWN ON THE TRACK PLAN

THE NO. 1 MARKER IS USED WHERE THE DISTANCE BETWEEN STATIONS IS GREATER THAN 3000 FT. THE FIRST COIL IS ALWAYS f1 AND THE SECOND COIL IS f8.

MARKER FREQUENCIES

THE FREQUENCY NUMBER IS INDICATED ON EACH MARKER COIL SYMBOL ON THE TRACK PLAN. THE FOLLOWING TABLE INDICATES THE FUNCTION.

FREQUENCY NO.	FUNCTION	FREQUENCY
FIRST COIL		
1	2700 FT. STATION STOPPING	110KHz
2	1200 FT. STATION STOPPING	100KHz
3	484 FT. STATION STOPPING	92KHz
4	160 FT. STATION STOPPING	170KHz

SECOND COIL	PRECEDED BY (FIRST COIL)	INDICATES	
6	(2 OR 3)	SKIP STOP	130KHz
7	(2 OR 3)	SHORT (TYPE A) STOP	140KHz
8	(1)	DIRECTION	160KHz
8	(2 OR 3)	LONG (TYPE B) STOP	
9	(2 OR 3)	CENTER (TYPE C) STOP	180KHz
V	(2 OR 3)	CONTROLLED VARIABLE (f6, f7, f8, OR f9) – USED TO INDICATE TYPE OF STATION STOP AS INDICATED ABOVE.	

This Drawing Reflects a WMATA standard design approach. Project specific drawings must be developed by the Contractor which reflect this Design Philosophy

DESIGNED	GAH	5–00 DATE
DRAWN	JMR	5–00 DATE
CHECKED		DATE
APPROVED		DATE
UPDATED		DATE

REFERENCE DRAWINGS

NUMBER	DESCRIPTION

REVISIONS

DATE	BY	DESCRIPTION
08/2001	SYSP	Revised and issued by the Authority

WASHINGTON METROPOLITAN AREA TRANSIT AUTHORITY

DEPARTMENT OF TRANSIT SYSTEM DEVELOPMENT
OFFICE OF SYSTEMS

SUBMITTED — DATE

APPROVED — DIRECTOR — May 3, 2001 DATE

TYPICAL TRACK PLAN ABBREVIATIONS, SYMBOLS AND INSTALLATION DATA

SCALE: NONE

DRAWING NO. ST–ATC–GEN–001

TWO COIL, VITAL BIASED NEUTRAL RELAY–
COILS WIRED SEPARATELY

TWO COIL, VITAL BIASED NEUTRAL RELAY–
COILS WIRED IN SERIES

FL — VITAL FLASHER RELAY

TE — VITAL TIMER RELAY

SLOW RELEASE RELAY (VITAL)

UBX120
UCX120 — TWO ELEMENT VANE TYPE AC TRACK RELAY

S
O — SWITCH OVERLOAD RELAY

NV — NON–VITAL RELAY – COILS IN SERIES

NV — NON–VITAL RELAY – COILS WIRED SEPARATELY

HD — NON–VITAL, HEAVY DUTY RELAY

RR — NON–VITAL REED RELAY

NORMALLY CLOSED FRONT CONTACT

NORMALLY OPEN FRONT CONTACT

NORMALLY CLOSED BACK CONTACT

NORMALLY OPEN BACK CONTACT

VITAL BACK CHECK CONTACT
(MOTOR TIMER RELAYS ONLY)

HEAVY DUTY CONTACT

HEAVY DUTY CONTACT
(MAGNETIC BLOWOUT)

MAKE–BEFORE–BREAK CONTACT

FRONT–BACK CONTACT – NORMALLY
DE–ENERGIZED RELAY

FRONT–BACK CONTACT – NORMALLY
ENERGIZED RELAY

VOLTAGE–TEST TERMINAL

CURRENT–TEST TERMINAL

TERMINAL

GATE STRAP TERMINAL (SLIDING LINK)

POSITIVE DC ENERGY

DC ENERGY RETURN

GROUND CONNECTION

T — WIRES TWISTED

INDUCTOR COIL

TRANSFORMER

TRANSFORMER WITH MULTIPLE
SECONDARY COILS

DIODE

LIGHT EMITTTING DIODE (LED)

ZENER DIODE

B C E — TRANSISTOR — B C E

CAPACITOR

FIXED RESISTOR OR HEATER UNIT

VARIABLE RESISTOR

VARISTOR

RESISTOR W/FIXED TAPS

INDUCTOR RESISTOR UNIT FOR
POWER FREQUENCY TRACK CIRCUITS

DOOR INTERLOCK SWITCH (OPENS WHEN DOOR OPENS)

CUT–OUT SWITCH

SINGLE–POLE, DOUBLE–THROW SWITCH;
(POSSIBLE FUTURE – N.I.C.)

SINGLE–POLE CIRCUIT BREAKER

TWO–POLE CIRCUIT BREAKER

THREE–POLE CIRCUIT BREAKER

PUSHBUTTON

PUSH–PULL–TWIST PUSHBUTTON

CONTACT MADE WHEN PUSHED

CONTACT MADE WHEN PULLED

CW — CONTACT MADE WHEN TURNED CLOCKWISE

CCW — CONTACT MADE WHEN TURNED COUNTERCLOCKWISE

INDICATING CIRCUIT BREAKER

FUSED DISCONNECT

INDICATING TIME DELAY FUSE

TIME DELAY FUSE

INDICATING FUSE

FUSE

R — INCANDESCENT LAMP
(LETTER INDICATES COLOR OF LAMP COVER)
(R=RED, W=WHITE, G=GREEN, LW=LUNAR WHITE, Y=YELLOW)

R — LIGHT EMITTING DIODE (LED) (PANEL INDICATOR)
(LETTER INDICATES COLOR OF LED)
(R=RED, A=AMBER, G=GREEN, W=WHITE)

SINGLE STROKE BELL

RING
TIP
GROUND — TELEPHONE JACK

AUDIBLE ALARM

This Drawing Reflects a WMATA standard design approach. Project specific drawings must be developed by the Contractor which reflect this Design Philosophy

DESIGNED	GAH	2–00 DATE
DRAWN	JMR	2–00 DATE
CHECKED		DATE
APPROVED		DATE
UPDATED		DATE

REFERENCE DRAWINGS

NUMBER	DESCRIPTION

REVISIONS

DATE	BY	DESCRIPTION
08/2001	SYSP	Revised and issued by the Authority

WASHINGTON METROPOLITAN AREA TRANSIT AUTHORITY

DEPARTMENT OF TRANSIT SYSTEM DEVELOPMENT
OFFICE OF SYSTEMS

SUBMITTED — DATE

APPROVED — DIRECTOR — May 3, 2001 DATE

TYPICAL ELECTRICAL SYMBOLS

SCALE: NONE

DRAWING NO. ST–ATC–GEN–002

TYPICAL RELAY IDENTIFICATION	NOMENCLATURE		COIL NUMBER		CONTACT NUMBER																																							REMARKS
	INSTALLED RELAY IDENTIFICATION	RACK AND LOCATION	1	2	11	12	13	14	15	16	17	21	22	23	24	25	26	27	31	32	33	34	35	36	37	41	42	43	44	45	46	51	52	53	54	55	56	61	62	63	64	65	66	

NOTES:

1. THE INTENT OF THESE CHARTS IS FOR THE CONTRACTOR TO PROVIDE THE AUTHORITY WITH A QUICK AND EASY METHOD FOR LOCATING CIRCUIT DRAWINGS SHOWING THE CONTROL CIRCUITRY FOR EACH RELAY COIL, AND THE CIRCUITRY AFFECTED BY EACH RELAY CONTACT USED.
2. THIS DRAWING PRESENTS A SUGGESTED FORMAT. THE CONTRACTOR SHALL USE THIS FORMAT, OR SOME OTHER FORMAT WHICH HAS THE PRIOR APPROVAL OF THE ENGINEER, TO MEET THE INTENT OF THESE CHARTS.
3. THE CONTRACTOR SHALL LIST RELAYS IN ALPHABETICAL ORDER BY BASIC TYPES FOR EACH BOOK OF PLANS PROVIDED.
4. THE CONTRACTOR SHALL PROVIDE A "LOCATION CHART" FOR EACH TCR IN WHICH ATC EQUIPMENT IS INSTALLED UNDER THIS CONTRACT.
5. THE CONTRACTOR SHALL INDICATE THE DWG. NO. FOR EACH RELAY COIL AND EACH RELAY HEEL CONTACT ONLY.
6. SEE SECTION 16991, ATC DRAWINGS AND TRACINGS.

This Drawing Reflects a WMATA standard design approach. Project specific drawings must be developed by the Contractor which reflect this Design Philosophy

DESIGNED	GAH	2-00 DATE
DRAWN	JMR	2-00 DATE
CHECKED		DATE
APPROVED		DATE
UPDATED		DATE

REFERENCE DRAWINGS

NUMBER	DESCRIPTION

REVISIONS

DATE	BY	DESCRIPTION
08/2001	SYSP	Revised and issued by the Authority

WASHINGTON METROPOLITAN AREA TRANSIT AUTHORITY

DEPARTMENT OF TRANSIT SYSTEM DEVELOPMENT
OFFICE OF SYSTEMS

SUBMITTED _____ DATE

APPROVED _____ May 3, 2001
DIRECTOR DATE

TYPICAL RELAY/CONTACT LOCATION CHART FORMAT

SCALE: NONE

DRAWING NO. ST-ATC-GEN-003

SAFE BRAKING TEST DATA SHEET

CONTRACT NUMBER _____ ROUTE SEGMENT _____ TRANSMITTAL NUMBER OF APPROVED BLOCK DESIGN DATA _____

	1	2	3	4	5	6	7	8	9	10	11	12	13	14	15	16	17	18	19	20	21	22	23	24	25	26	27	28	29	30
	A	B	C	D	E	F	G	H	I	J	K	L	M	N	O	P	Q	R	S	T	U	V	W	X	Y	Z	AA	AB	AC	AD
	BLOCK DESIGN DATA									TRAIN TEST DATA (FROM TEST FIXTURE)						CALCULATED ANALYSIS				TRAIN TEST DATA COMPENSATED				COMPENSATED ANALYSIS				EXTRAPOLATED ANALYSIS		
	TARGET BOND	OVERRUN BOND	TEST ZONE FEET, TRUE DISTANCE	EFFECTIVE BRAKE RATE MPHPS X % GRADE	C.L. ATP APPROACH SPEED	RUN – AWAY SPEED	REACTION DISTANCE	DESIGN STOPPING DISTANCE	8 CAR ALLOWANCE	DATE OF TEST	HEAD END CAR #	MAXIMUM SPEED	STOPPING TIME	STOPPING DISTANCE	DISTANCE TO 0 BOND	DISTANCE READINGS CHECK (CONSTANT)	OVERRUN CHECK °10 OK° 0 IF X 2 RUNS	SPEED CHECK °0=OK	BRAKE RATE CHECK –0.1 to +0.1=OK	REACTION DISTANCE	MAXIMUM SPEED	STOPPING DISTANCE	DISTANCE TO 0 BOND	DISTANCE READINGS CHECK (CONSTANT)	OVERRUN CHECK °10 OK; 0=OK IF 2X RUN	SPEED CHECK °0=OK	BRAKE RATE CHECK –0.1 to =0.1=OK	CORRECTED STOPPING DISTANCE	ADDED STOPPING DISTANCE	PROBABLE DISTANCE TO OVER–RUN °10
	T.C.STA.	T.C.STA.	FEET		M.P.H.	M.P.H.	FEET	FEET	FEET	MM/DD/YY		M.P.H.	SECONDS	FEET	FEET	FEET	FEET	M.P.H.	MPHPS	FEET	M.P.H.	FEET	FEET	FEET		M.P.H.	MPHPS	FEET	FEET	FEET

COLUMN IDENTIFICATION IN EITHER NUMERICAL OR ALPHABETIC FORM

BASIC TYPE OF DATA

SPECIFIC DATA

TEST INFORMATION ENTRY LINES

WORKSHEET FORMULAS FOR DATA

ROW	COLUMN		NUMERIC FORMULA	ALPHABETIC FORMULA
19	16	P	[(19c3–r19c7–r19c14–r19c15)/(r19c3/1000)]	[C–G–N–O]/[C/1000]
	17	Q	(r19c3–r19c7–r19c14–r19c9–18)	C–G–N–I–18
	18	R	(r19c12–r19c6)	L–F
	19	S	((r19c12/r19c13)–r19c4)	[L/M]–D
	20	T	[r19c7+(r19c16*r19c7/1000)]	[G+(P*G/1000)]
	21	U	[(r19c12+(r19c16*r19c12/1000)]	[L+(P*L/1000)]
	22	V	[(r19c14+(r19c16*r19c14/1000)]	[N+(P*N/1000)]
	23	W	[(r19c15+(r19c16*r19c15/1000)]	[O+(P*O/1000)]
	24	X	(r19c3–r19c20–r19c22–r19c23)/(r19c3/1000)	[(C–T–V–W)/(C/1000)]
	25	Y	(r19c3–r19c20–r19c22–r19c9–18)	C–T–V–I–18
	26	Z	(r19c21–r19c6)	U–F
	27	AA	[(r19c21/r19c13)–r19c4)]	[U/M]–D
	28	AB	[(r19c22*0.73*r19c6~2)/(0.73*r19c21~2)]	[V*.73F~2]/[.73U~2]
	29	AC	(r19c28–r19c22)	AB–V
	30	AD	(r19c23–r19c29–r19c9–18)	W–AC–I–18
20	16	P	AS ABOVE	
	30	AD		

ETC.

This Drawing Reflects a WMATA standard design approach. Project specific drawings must be developed by the Contractor which reflect this Design Philosophy

DESIGNED GAH 7–00 DATE
DRAWN JMR 7–00 DATE
CHECKED _____ DATE
APPROVED _____ DATE
UPDATED _____ DATE

REFERENCE DRAWINGS

NUMBER	DESCRIPTION

REVISIONS

DATE	BY	DESCRIPTION
08/2001	SYSP	Revised and issued by the Authority

WASHINGTON METROPOLITAN AREA TRANSIT AUTHORITY

DEPARTMENT OF TRANSIT SYSTEM DEVELOPMENT
OFFICE OF SYSTEMS

SUBMITTED _____ DATE

APPROVED _____ DIRECTOR May 3, 2001 DATE

DATA SHEET FORMAT – SAFE BRAKING TESTS

SCALE NONE

DRAWING NO. ST–ATC–GEN–004

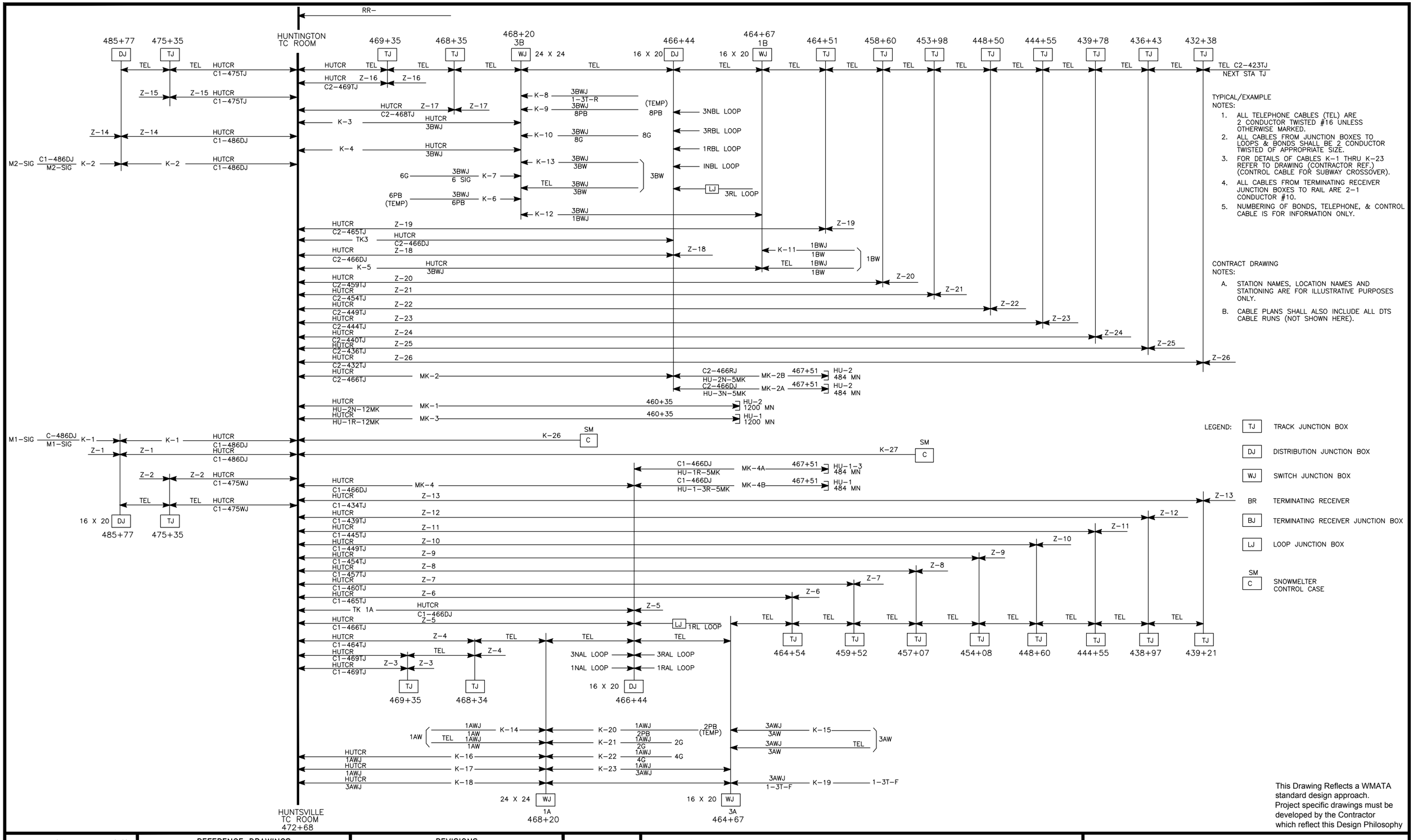

DESIGNED	GAH	2–00 DATE
DRAWN	JMR	2–00 DATE
CHECKED		DATE
APPROVED		DATE
UPDATED		DATE

REFERENCE DRAWINGS

NUMBER	DESCRIPTION

REVISIONS

DATE	BY	DESCRIPTION
08/2001	SYSP	Revised and issued by the Authority

WASHINGTON METROPOLITAN AREA TRANSIT AUTHORITY

DEPARTMENT OF TRANSIT SYSTEM DEVELOPMENT
OFFICE OF SYSTEMS

SUBMITTED _____ DATE

APPROVED _____ DIRECTOR May 3, 2001 DATE

TYPICAL ATC WAYSIDE CABLE PLAN

SCALE NONE

DRAWING NO. ST–ATC–GEN–005

NOTES:

1. ACTUAL ROUTING OF 1000 KCMIL CROSSBONDING AND SUBSTATION RETURN CABLES MAY REQUIRE CONSIDERABLY MORE CABLE THAN IS INDICATED BY THIS SCHEMATIC. CONTRACTOR SHALL CONDUCT HIS OWN FIELD INSPECTION TO DETERMINE LENGTHS OF CABLE ACTUALLY REQUIRED.
2. FOR CLAMPED CONNECTION OF 1000 KCMIL CABLE TO RUNNING RAILS, SEE DWG. G–036 AND DETAIL "A" ON DWG. G–037.
3. EQUIVALENT LAYOUT REQUIRED FOR BALLASTED TRACK.
4. AS AN ALTERNATIVE TO EACH 1000 KCMIL CLAMPED IMPEDANCE–BOND–TO–RUNNING–RAIL CABLE, THE CONTRACTOR MAY PROVIDE A DUAL 500 KCMIL CABLE, COMPRESSION BOLTED TO THE RUNNING RAIL. SEE SECTION 16968.

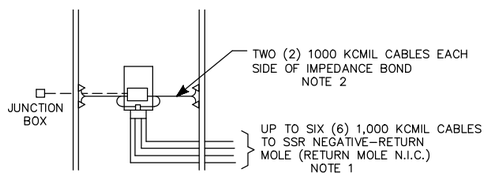

SCHEMATIC OF NEGATIVE RETURN AT SUBSTATION (OTHERWISE SAME AS FIG. 1)

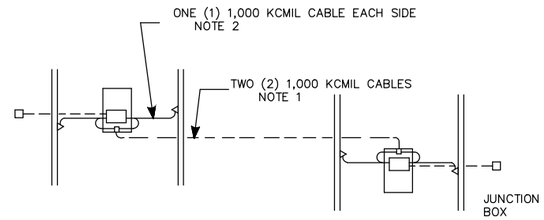

SCHEMATIC OF 2–BOND LOCATION WITH CROSSBONDING (OTHERWISE SAME AS FIG. 1)

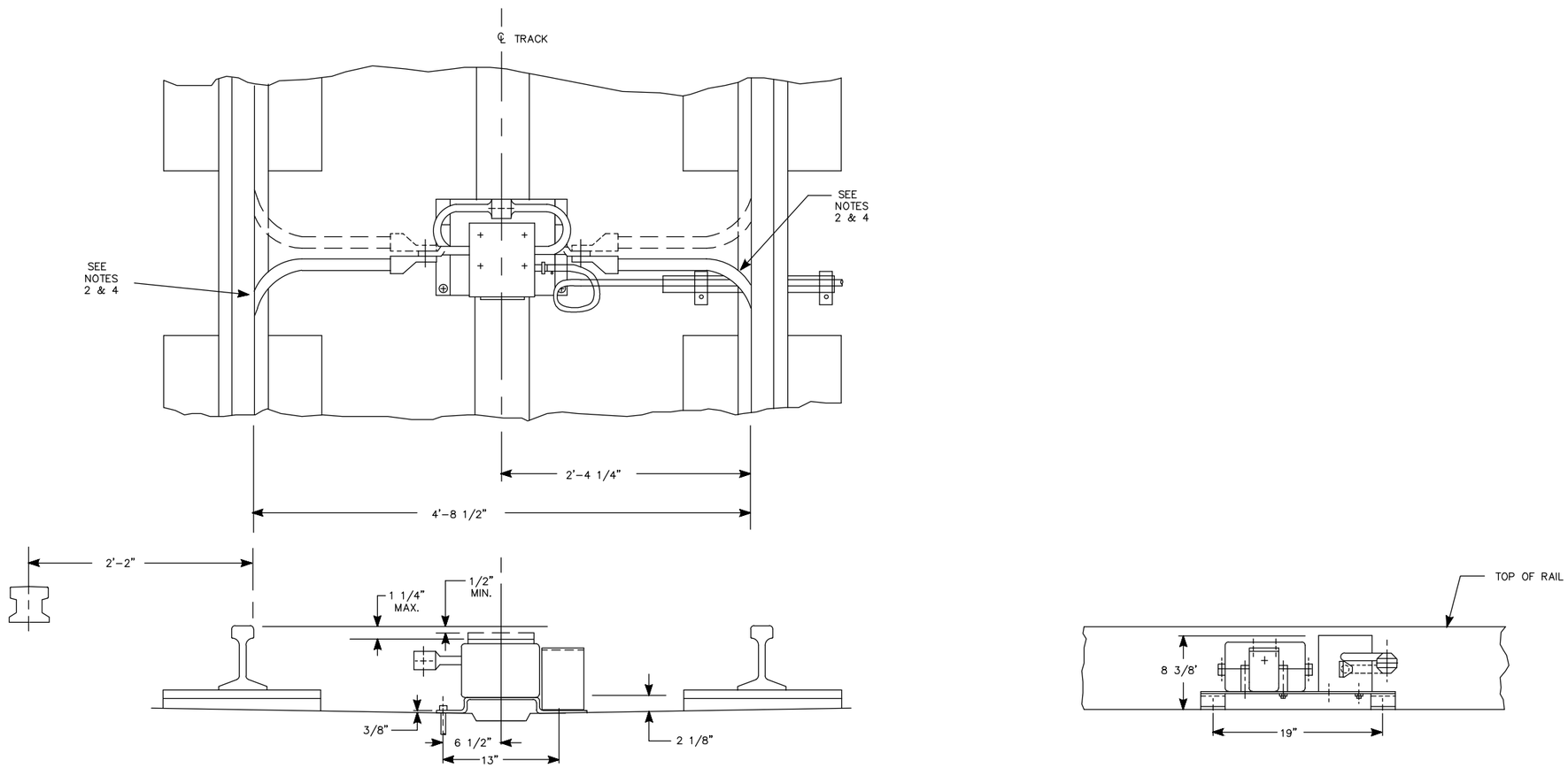

FIG. 1

This Drawing Reflects a WMATA standard design approach. Project specific drawings must be developed by the Contractor which reflect this Design Philosophy

DESIGNED	GAH	2–00 DATE
DRAWN	JMR	2–00 DATE
CHECKED		DATE
APPROVED		DATE
UPDATED		DATE

REFERENCE DRAWINGS

NUMBER	DESCRIPTION

REVISIONS

DATE	BY	DESCRIPTION
08/2001	SYSP	Revised and issued by the Authority

WASHINGTON METROPOLITAN AREA TRANSIT AUTHORITY

DEPARTMENT OF TRANSIT SYSTEM DEVELOPMENT
OFFICE OF SYSTEMS

SUBMITTED _____ DATE

APPROVED _____ DIRECTOR May 3, 2001 DATE

TYPICAL IMPEDANCE BOND LAYOUT FOR DIRECT FIXATION TO CONCRETE

SCALE NONE

DRAWING NO. ST–ATC–GEN–006

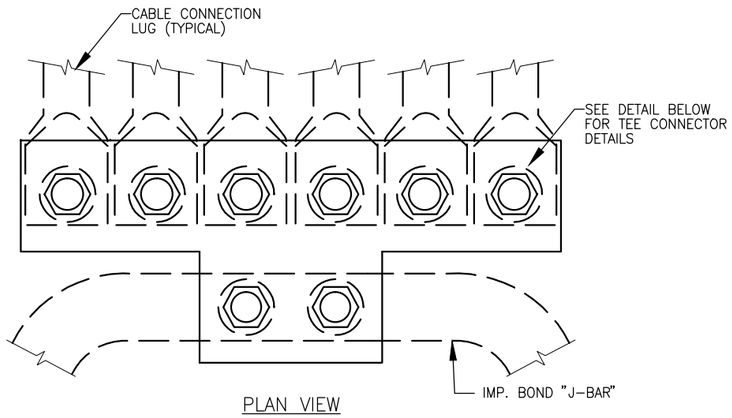

PLAN VIEW

TYPICAL TEE CONNECTOR ASSEMBLY
FOR HIGH-CURRENT AF IMPEDANCE BOND

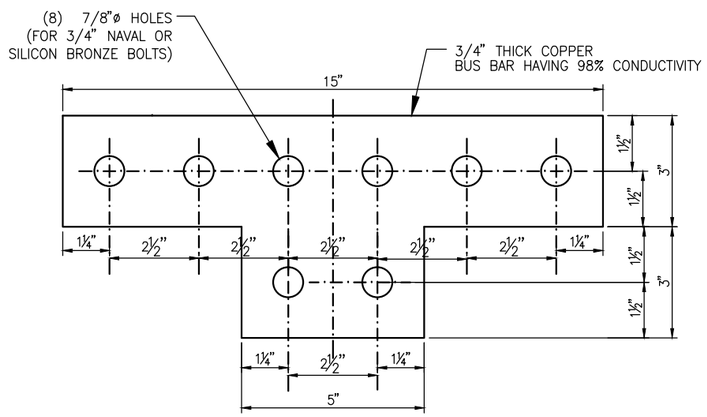

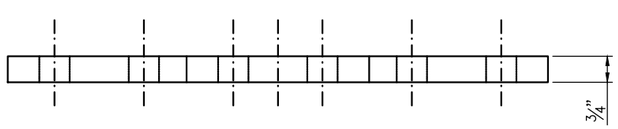

TEE CONNECTOR DETAILS

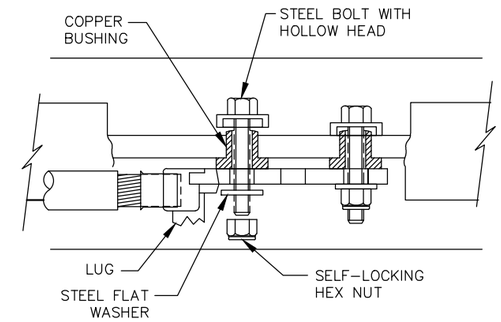

TOP (RAIL CUT-OUT) VIEW

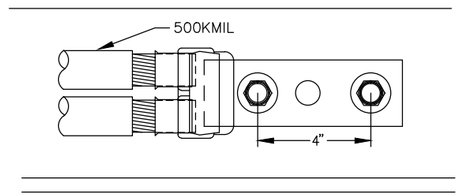

FRONT (RAIL GAUGE SIDE) VIEW

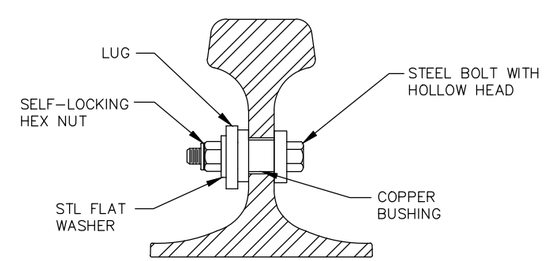

FRONT (RAIL PROFILE) VIEW

This Drawing Reflects a WMATA standard design approach. Project specific drawings must be developed by the Contractor which reflect this Design Philosophy

DESIGNED	GAH	02-00 DATE
DRAWN	JMR	02-00 DATE
CHECKED		DATE
APPROVED		DATE

REFERENCE DRAWINGS

NUMBER	DESCRIPTION

REVISIONS

DATE	BY	DESCRIPTION
08/2001	SYSP	REVISED AND ISSUED BY THE AUTHORITY
07/2007	ENSS	REVISED AND ISSUED BY THE AUTHORITY
05/2008	ENSS	ADDED CEMBRE LUG CONNECTION TO RAIL
02/10/2017	MM	REVISED FOR FQ15192 (MODIFIED " T" CONNECTOR)

WASHINGTON METROPOLITAN TRANSIT AUTHORITY

DEPARTMENT OF TRANSIT INFRASTRUCTURE AND ENGINEERING SERVICES
OFFICE OF THE CHIEF ENGINEER, INFRASTRUCTURE

SUBMITTED _____ DATE

APPROVED _____ CHIEF ENGINEER DATE

TYPICAL IMPEDANCE BOND "T" CONNECTOR AND TWO HOLE TUBE CRIMP LUG CONNECTION TO RAIL

SCALE	DRAWING NO.	SHEET NO.
	ST-ATC-GEN-008	

NOTES:

1. ACTUAL ROUTING OF 1000 KCMIL CROSSBONDING AND SUBSTATION RETURN CABLES MAY REQUIRE CONSIDERABLY MORE CABLE THAN IS INDICATED BY THIS SCHEMATIC. CONTRACTOR SHALL CONDUCT HIS OWN FIELD INSPECTION TO DETERMINE LENGTHS OF CABLE ACTUALLY REQUIRED.
2. EQUIVALENT CONFIGURATION REQUIRED FOR "DIRECT FIXATION".
3. THE TOTAL LENGTH FOR INSTALLING THE RAIL CONECTIONS CANNOT EXCEED 36 INCHES (SEE DETAILS "C", "D" & "E"). ALL SIDE LEAD CABLES SHALL BE THE SAME LENGTH.

EQUIPMENT:

1. SIDE LEAD CABLES.
2. 4" FRE CONDUIT IN CONCRETE ENCASED DUCTBANK.
3. SEALING COMPOUND (PER SPECIFICATIONS).
4. "T"CONNECTOR–FABRICATED PER SPECIFICATIONS. SEE DWG. ST–ATC–GEN–008.
5. 1000 KCMIL CABLE WITH ONE COMPRESSION TYPE EYE FITTING (PER SPECIFICATIONS). 8 TO 12 CABLES.
6. 1000 KCMIL CABLE WITH TWO COMPRESSION TYPE EYE FITTINGS (PER SPECIFICATIONS).
7. HIGH CURRENT WAYSIDE AF IMPEDANCE BOND

FRONT (RAIL GAUGE SIDE) VIEW

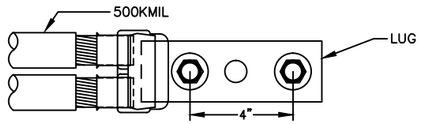

DETAIL 'A'

FRONT (RAIL GAUGE SIDE) VIEW

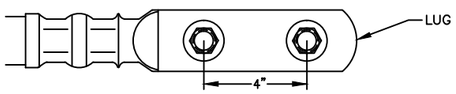

DETAIL 'B'

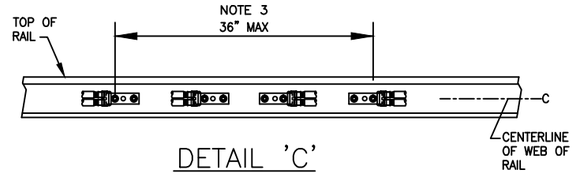

DETAIL 'C'

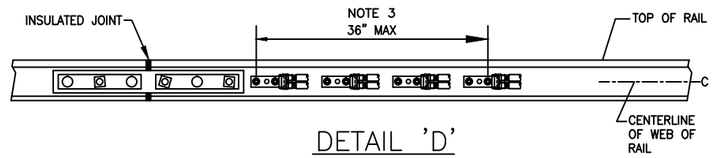

DETAIL 'D'

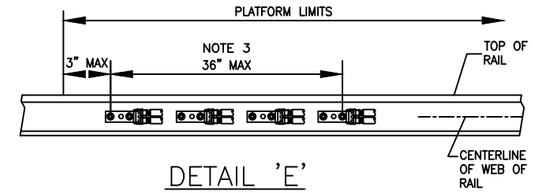

DETAIL 'E'

LEGEND

- NEGATIVE RETURN CABLE
- RUNNING RAIL
- INSULATED JOINT, BY OTHERS

This Drawing Reflects a WMATA standard design approach. Project specific drawings must be developed by the Contractor which reflect this Design Philosophy

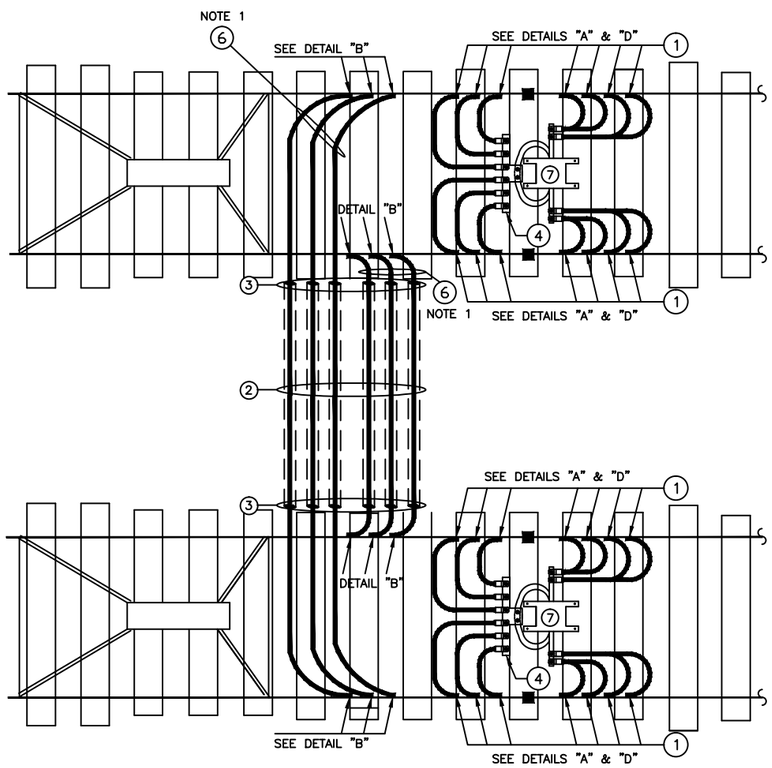

BUMPING POST CROSS–BOND

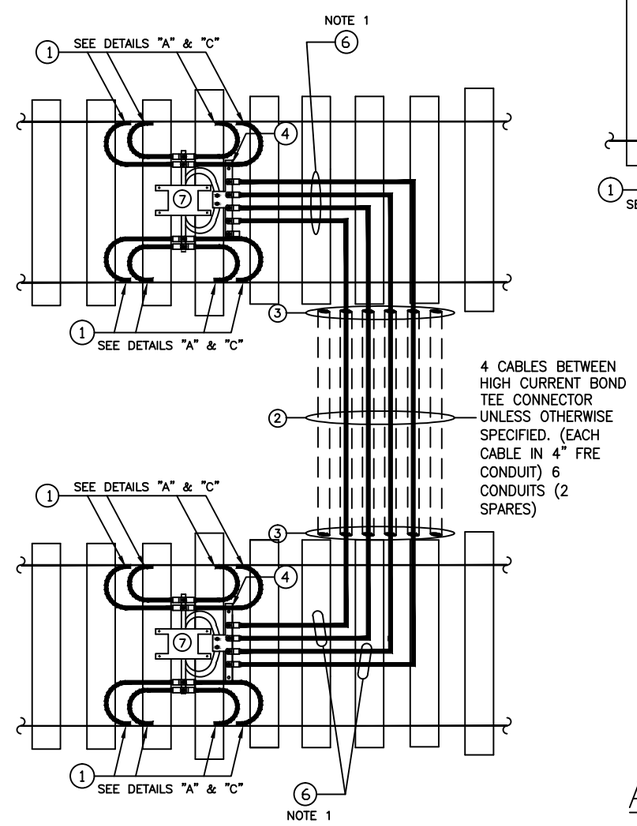

MAINLINE CROSS–BOND

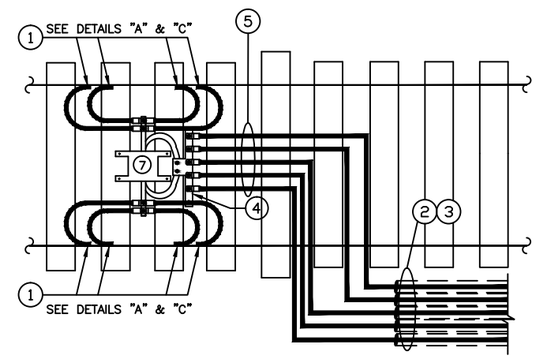

SUBSTATION RETURN

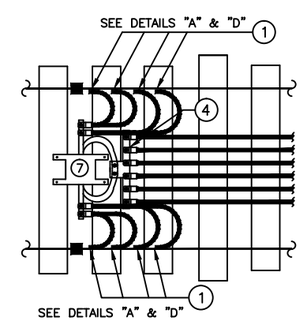

HIGH CURRENT BOND AGAINST AN INSULATED JOINT

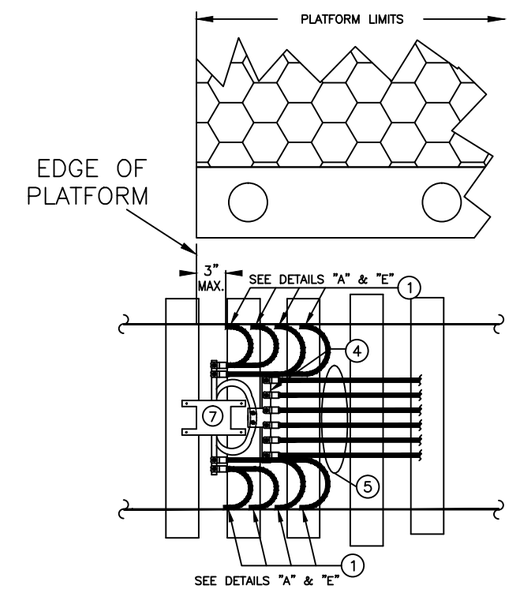

HIGH CURRENT BOND AT THE END OF PLATFORM

DESIGNED	GAH	02-00 DATE
DRAWN	JMR	02-00 DATE
CHECKED		DATE
APPROVED		DATE

REFERENCE DRAWINGS

NUMBER	DESCRIPTION

REVISIONS

DATE	BY	DESCRIPTION
08/2001	SYSP	REVISED AND ISSUED BY THE AUTHORITY
03/30/17	MM	REVISED FOR FQ15192

WASHINGTON METROPOLITAN TRANSIT AUTHORITY

DEPARTMENT OF TRANSIT INFRASTRUCTURE AND ENGINEERING SERVICES
OFFICE OF THE CHIEF ENGINEER, INFRASTRUCTURE

SUBMITTED _____ DATE

APPROVED CHIEF ENGINEER _____ DATE

TYPICAL HIGH CURRENT IMPEDANCE BOND NEGATIVE RETURN BONDING DIAGRAM

SCALE	DRAWING NO.	SHEET NO.
	ST-ATC-GEN-009	

NOTES:

1. ACTUAL ROUTING OF 1000 KCMIL CROSSBONDING CABLES MAY REQUIRE CONSIDERABLY MORE CABLE THAN IS INDICATED BY THIS SCHEMATIC. CONTRACTOR SHALL CONDUCT HIS OWN FIELD INSPECTION TO DETERMINE LENGTHS OF CABLE ACTUALLY REQUIRED.
2. EQUIVALENT CONFIGURATION REQUIRED FOR "DIRECT FIXATION".
3. THE TOTAL LENGTH FOR INSTALLING THE RAIL CONECTIONS CANNOT EXCEED 36 INCHES (SEE DETAIL "B").
4. ALL SIDE LEAD CABLES SHALL BE THE SAME LENGTH.

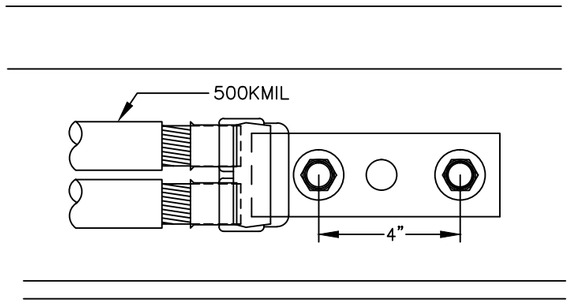

FRONT (RAIL GAUGE SIDE) VIEW
DETAIL 'A'

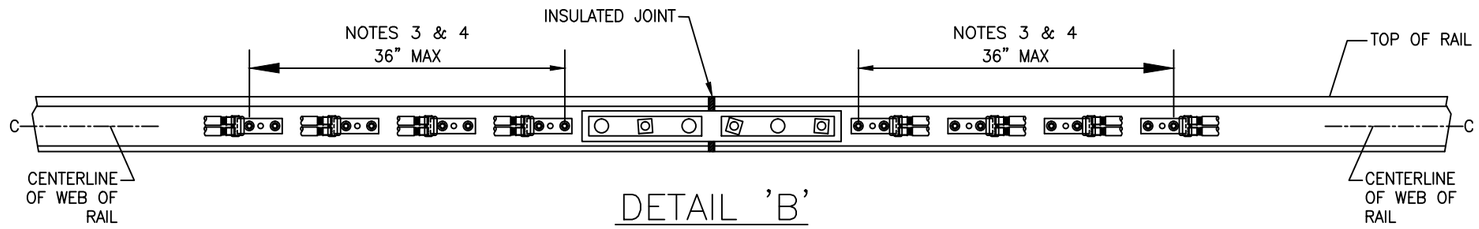

DETAIL 'B'

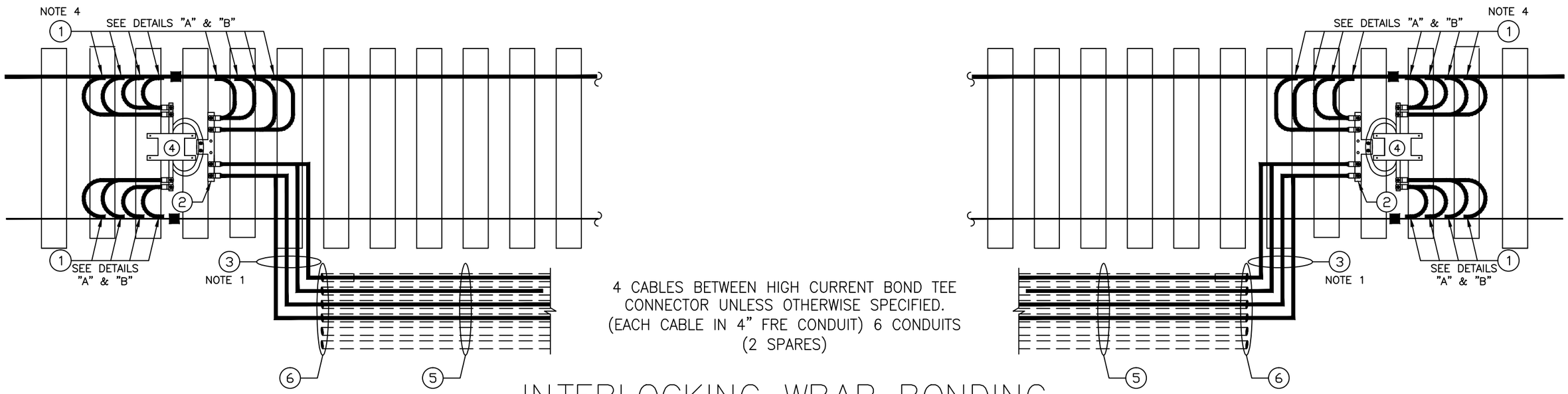

4 CABLES BETWEEN HIGH CURRENT BOND TEE CONNECTOR UNLESS OTHERWISE SPECIFIED. (EACH CABLE IN 4" FRE CONDUIT) 6 CONDUITS (2 SPARES)

INTERLOCKING WRAP BONDING

NEGATIVE RETURN CABLE

RUNNING RAIL

INSULATED JOINT, BY OTHERS

EQUIPMENT:

1. SIDE LEAD CABLES.
2. "T"CONNECTOR–FABRICATED PER SPECIFICATIONS. SEE DWG. ST–ATC–GEN–008.
3. 1000 KCMIL CABLE WITH TWO COMPRESSION TYPE EYE FITTING (PER SPECIFICATIONS)
4. HIGH CURRENT WAYSIDE AF IMPEDANCE BOND
5. 4" FRE CONDUIT IN CONCRETE ENCASED DUCTBANK
6. SEALING COMPUND (PER SPECIFICATIONS).

This Drawing Reflects a WMATA standard design approach. Project specific drawings must be developed by the Contractor which reflect this Design Philosophy

DESIGNED	ACC	11/2016 DATE
DRAWN	ACC	11/2016 DATE
CHECKED		DATE
APPROVED		DATE

REFERENCE DRAWINGS

NUMBER	DESCRIPTION

REVISIONS

DATE	BY	DESCRIPTION
03/30/2017	MM	CREATED FOR FQ15192

WASHINGTON METROPOLITAN TRANSIT AUTHORITY

DEPARTMENT OF TRANSIT INFRASTRUCTURE AND ENGINEERING SERVICES
OFFICE OF THE CHIEF ENGINEER, INFRASTRUCTURE

SUBMITTED _____ DATE

APPROVED _____ CHIEF ENGINEER DATE

TYPICAL INTERLOCKING WRAP BONDING

SCALE	DRAWING NO.	SHEET NO.
NONE	ST-ATC-GEN-010	

NOTES:

1. MARKER COILS SHALL NOT BE INSTALLED WITHIN 60 FT. OF SWITCH POINTS.
2. MARKER COILS SHALL NOT BE INSTALLED OVER DRAINS OR CABLE STUB-UPS.
3. A STATION OVERSPEED MARKER SIGN (AS SPECIFIED IN SECTION 16976) SHALL BE AFFIXED TO ONE OF THE SLOPING FACES OF EACH 160-FOOT PLATFORM MARKER HOUSING AS SPECIFIED IN SECTION 16967.

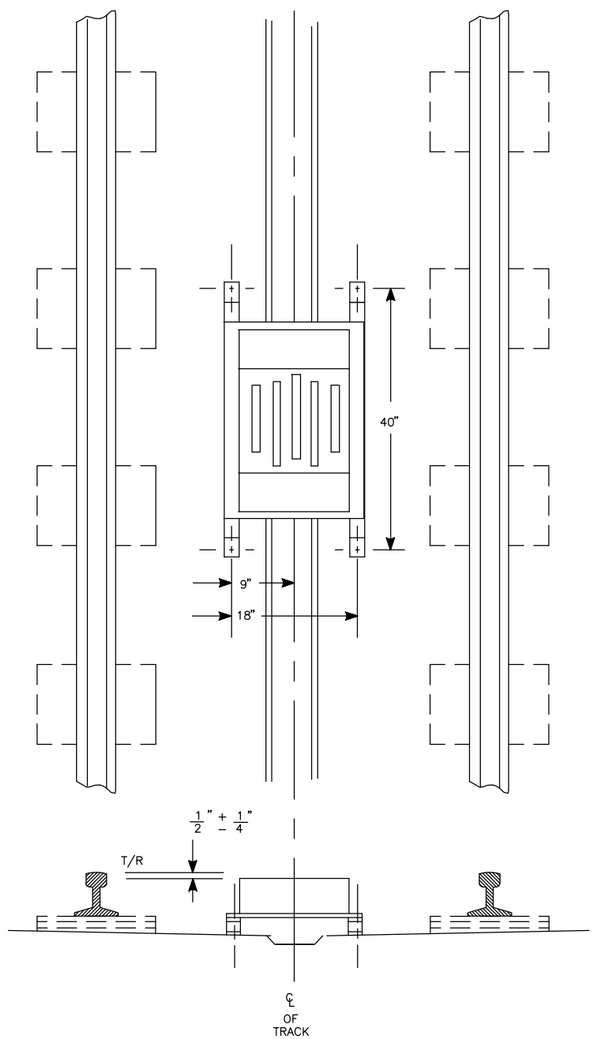

DIRECT FIXATION

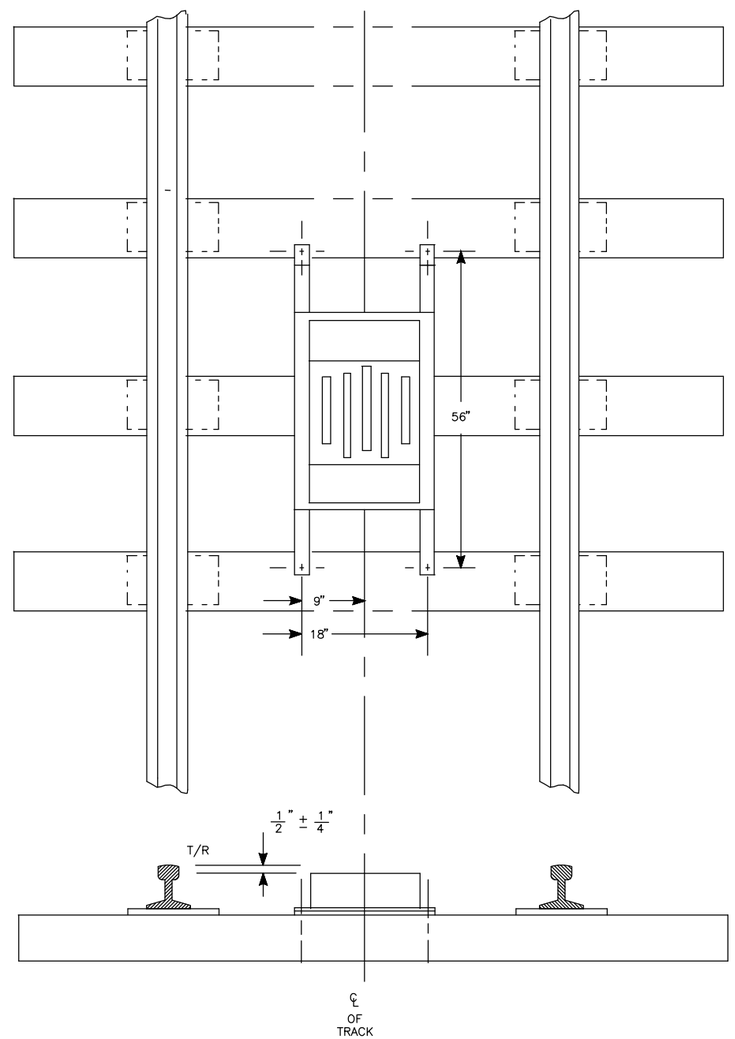

BALLASTED TRACK

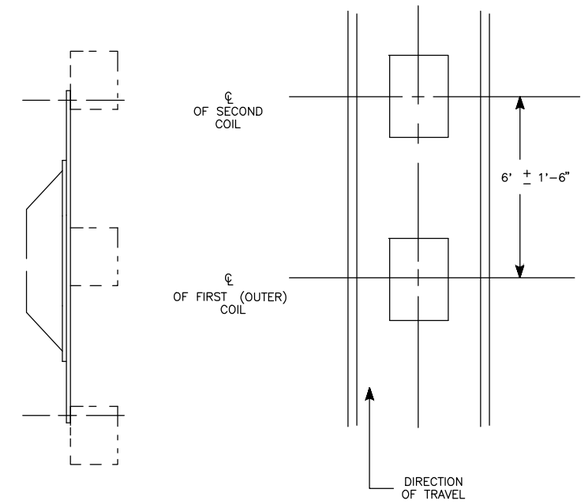

MARKER COIL OFFSET VS CURVE RADIUS

RADII OF CURVE	OFFSET FROM ℄
8500'–2900'	1"
2900'–1750'	2"
1750'–1250'	3"
1250'–975'	4"
975'–800'	5"
800'–700'	6"
LESS THAN 700'	7"

SEE SECTION 16967.

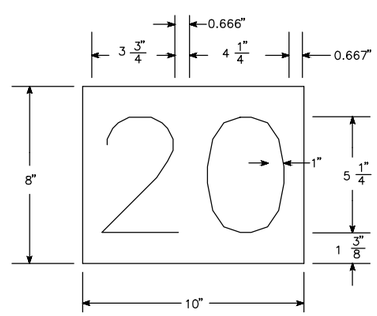

STATION OVERSPEED MARKER SIGN

(SILVER NUMBERS ON GREEN BACKGROUND)
(SEE SECTIONS 16967 & 16976 AND NOTE 3.)

This Drawing Reflects a WMATA standard design approach. Project specific drawings must be developed by the Contractor which reflect this Design Philosophy

DESIGNED	GAH	2-00 DATE
DRAWN	JMR	2-00 DATE
CHECKED		DATE
APPROVED		DATE
UPDATED		DATE

REFERENCE DRAWINGS

NUMBER	DESCRIPTION

REVISIONS

DATE	BY	DESCRIPTION
08/2001	SYSP	Revised and issued by the Authority

WASHINGTON METROPOLITAN AREA TRANSIT AUTHORITY

DEPARTMENT OF TRANSIT SYSTEM DEVELOPMENT
OFFICE OF SYSTEMS

SUBMITTED _____ DATE

APPROVED DIRECTOR May 3, 2001 DATE

TYPICAL MARKER COIL LAYOUTS – DIRECT FIXATION AND BALLASTED TRACK

SCALE NONE

DRAWING NO. ST-ATC-GEN-011

NOTES:

1. THIS JUNCTION BOX IS A REPRESENTATION OF JUNCTION BOXES OTHER THAN THE TRACK (TJ), LOOP (LJ), AND MARKER (MJ) JUNCTION BOXES.
2. ALL WIRES WITHIN A JUNCTION BOX SHALL BE LONG ENOUGH TO REACH ANY TERMINAL WITHIN THE JUNCTION BOX AFTER THE TERMINATING DEVICE HAS BEEN APPLIED.
3. ALL SPARE TERMINALS SHALL HAVE A FULL COMPLEMENT OF HARDWARE. THIS SHALL INCLUDE SLIDE STRAPS.
4. JUNCTION BOXES SHALL BE MOUNTED AT LEAST 6 FEET FROM THE CENTERLINE OF THE NEAREST TRACK AND IN SUCH A MANNER THAT THE OPEN BOX COVER CANNOT INTRUDE INTO THE CLEARANCE ENVELOPE OF THE TRANSIT VEHICLES.

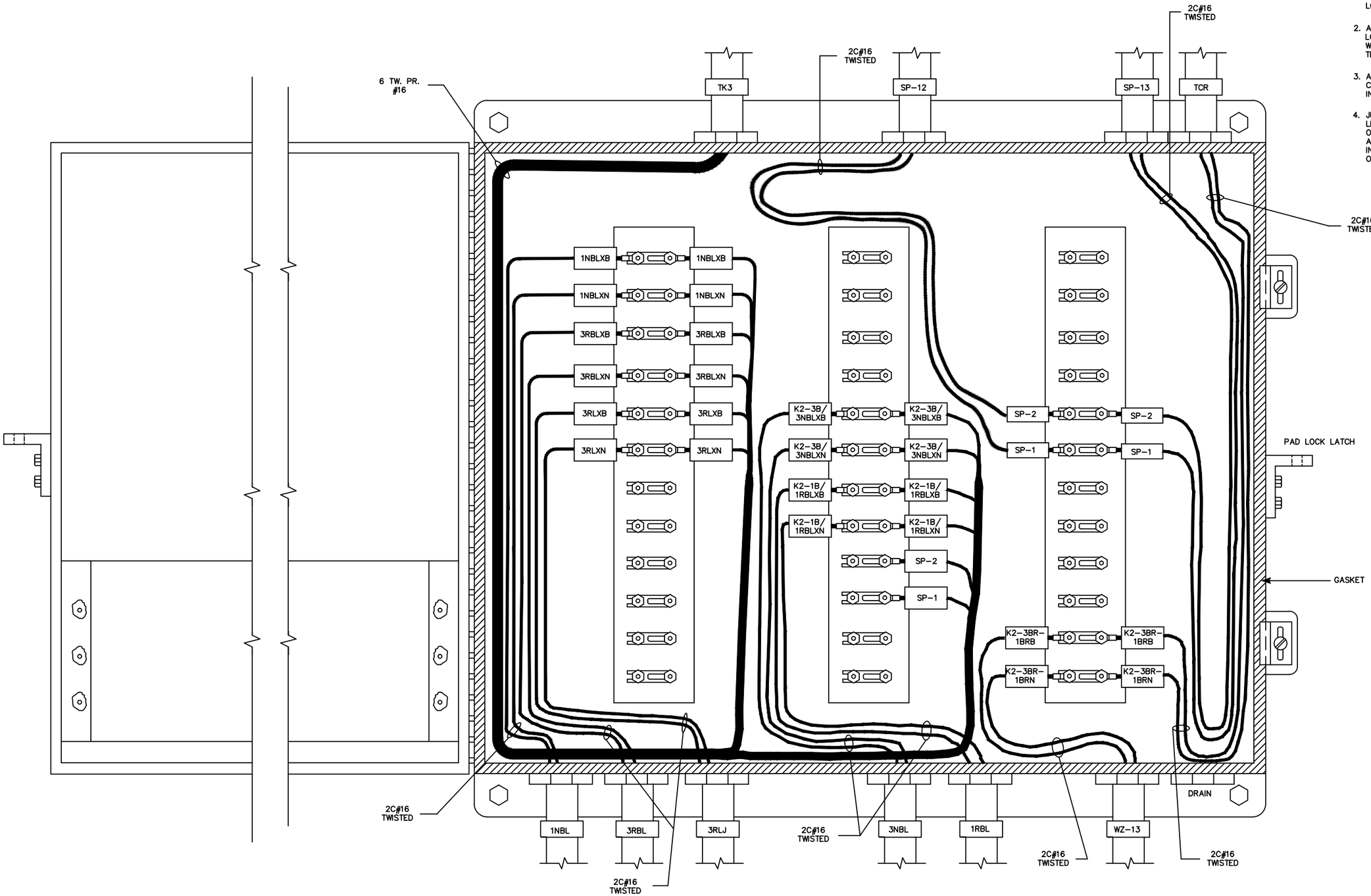

This Drawing Reflects a WMATA standard design approach. Project specific drawings must be developed by the Contractor which reflect this Design Philosophy

DESIGNED	GAH	02/00 DATE
DRAWN	JMR	02/00 DATE
CHECKED		DATE
APPROVED		DATE

REFERENCE DRAWINGS

NUMBER	DESCRIPTION

REVISIONS

DATE	BY	DESCRIPTION
08/2001	SYSP	REVISED AND ISSUED BY THE AUTHORITY
02/13/17	MM	REVISED FOR FQ15192 (REMOVED TEL WIRES)

WASHINGTON METROPOLITAN TRANSIT AUTHORITY

DEPARTMENT OF TRANSIT INFRASTRUCTURE AND ENGINEERING SERVICES
OFFICE OF THE CHIEF ENGINEER, INFRASTRUCTURE

SUBMITTED _____ DATE

APPROVED _____ CHIEF ENGINEER DATE

TYPICAL LARGE JUNCTION BOX PLAN

SCALE	DRAWING NO.	SHEET NO.
NONE	ST-ATC-GEN-012	

NOTES:

1. THIS DRAWING IS A REPRESENTATION OF A SMALL JUNCTION BOX USED FOR TRACK (TJ), LOOP (LJ) AND MARKER (MJ) JUNCTION BOXES.
2. ALL WIRES WITHIN A JUNCTION BOX SHALL BE LONG ENOUGH TO REACH ANY TERMINAL WITHIN THE JUNCTION BOX AFTER THE TERMINATING DEVICE HAS BEEN APPLIED.
3. ALL SPARE TERMINALS SHALL HAVE A FULL COMPLEMENT OF HARDWARE. THIS SHALL INCLUDE SLIDE STRAPS.
4. JUNCTION BOXES SHALL BE MOUNTED AT LEAST 6 FEET FROM THE CENTERLINE OF THE NEAREST TRACK AND IN SUCH A MANNER THAT THE OPEN BOX COVER CANNOT INTRUDE INTO THE CLEARANCE ENVELOPE OF THE TRANSIT VEHICLES.

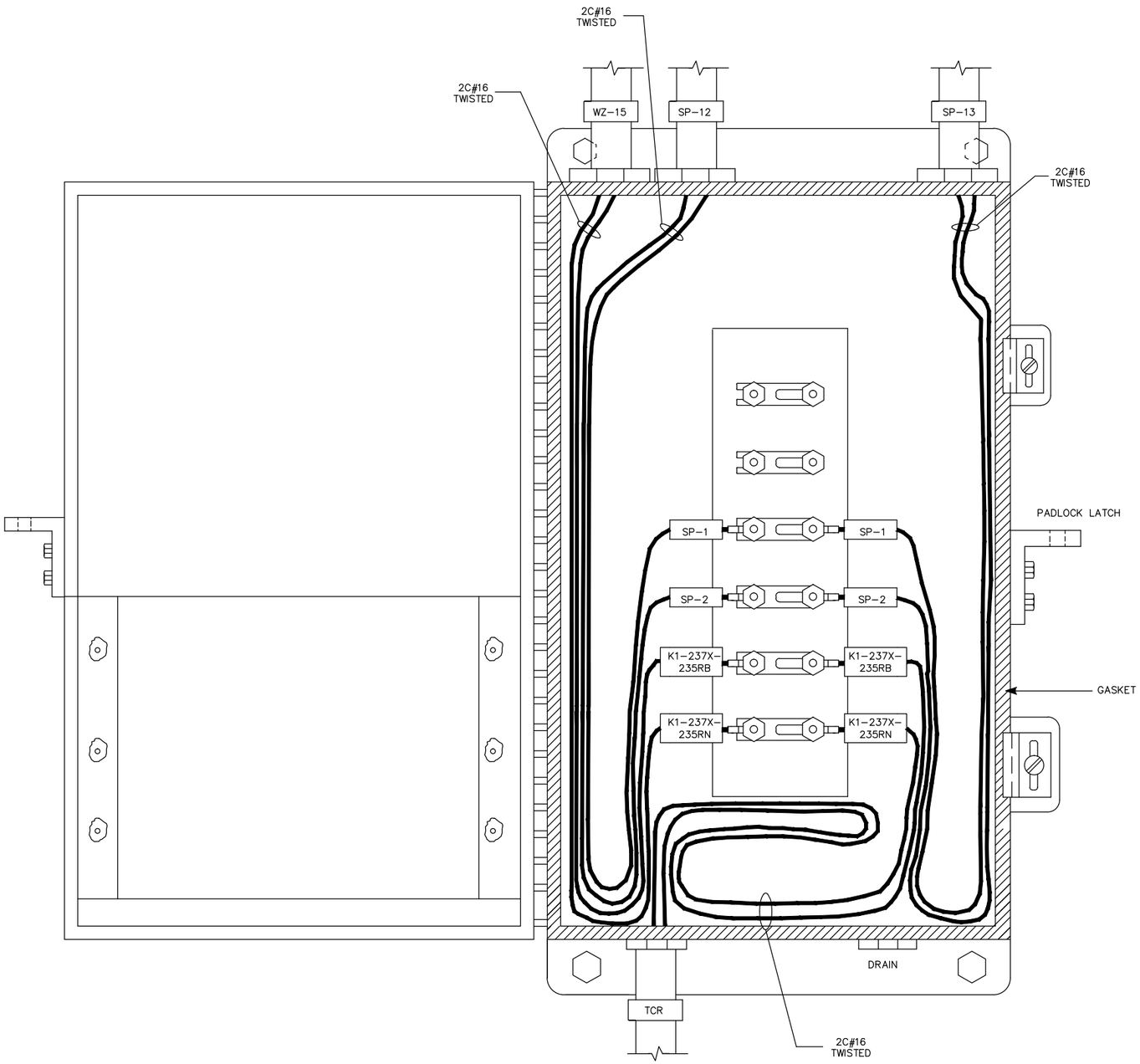

This Drawing Reflects a WMATA standard design approach. Project specific drawings must be developed by the Contractor which reflect this Design Philosophy

DESIGNED	GAH	02/00 DATE
DRAWN	JMR	02/00 DATE
CHECKED		DATE
APPROVED		DATE

REFERENCE DRAWINGS

NUMBER	DESCRIPTION

REVISIONS

DATE	BY	DESCRIPTION
08/2001	SYSP	REVISED AND ISSUED BY THE AUTHORITY
02/13/17	MM	REVISED FOR FQ15192 (REMOVED TEL WIRES)

WASHINGTON METROPOLITAN TRANSIT AUTHORITY

DEPARTMENT OF TRANSIT INFRASTRUCTURE AND ENGINEERING SERVICES
OFFICE OF THE CHIEF ENGINEER, INFRASTRUCTURE

SUBMITTED _____ DATE

APPROVED _____ CHIEF ENGINEER DATE

TYPICAL SMALL JUNCTION BOX PLAN

SCALE	DRAWING NO.	SHEET NO.
NONE	ST-ATC-GEN-013	

NOTES:

1. NOMINAL CLEARANCE TOLERANCES SHOWN FOR TANGENT TRACK. CLEARANCE DISTANCE SHALL BE INCREASED AS NECESSARY TO COMPENSATE FOR TRANSIT VEHICLE OVERHANG ON NON–TANGENT TRACK AND IN OR ADJACENT TO TURNOUTS, AND TRANSIT VEHICLE TILTING ON SUPERELEVATED TRACK.
2. NOMINAL DISTANCE SHOWN. CONTRACTOR SHALL MODIFY AS APPROVED BY THE ENGINEER TO PROVIDE REQUIRED SAFETY CLEARANCES.
3. SEE DWG. ST–ATC–GEN–26.
4. SIGNS SHALL BE LOCATED SO THAT THEY WILL NOT INTERFERE WITH TRAIN OPERATOR'S VIEW OF SIGNAL ASPECTS.

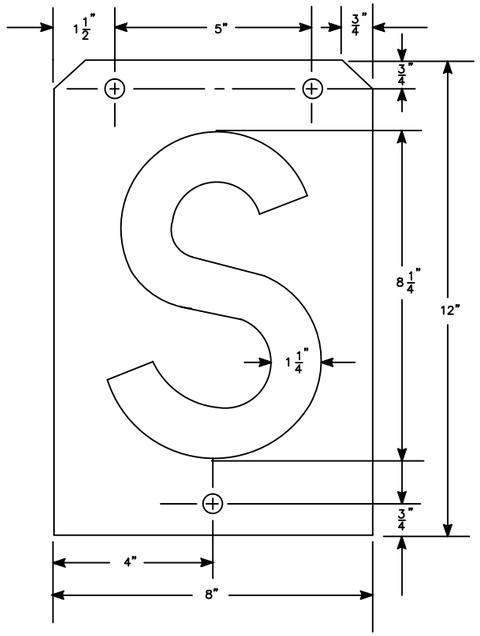

STATION STOP SIGN

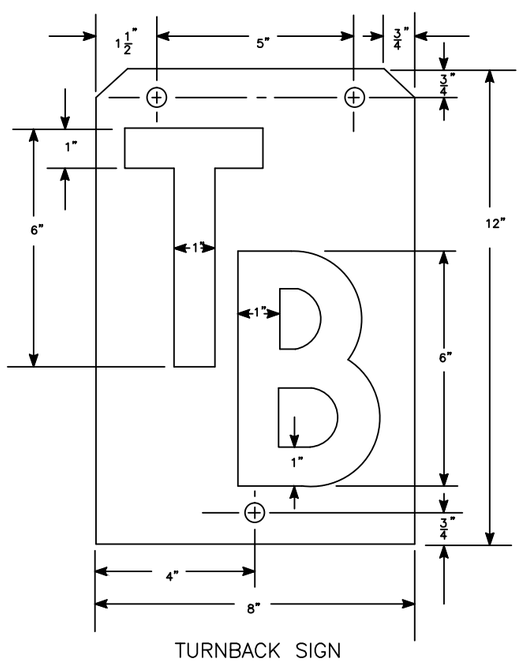

TURNBACK SIGN

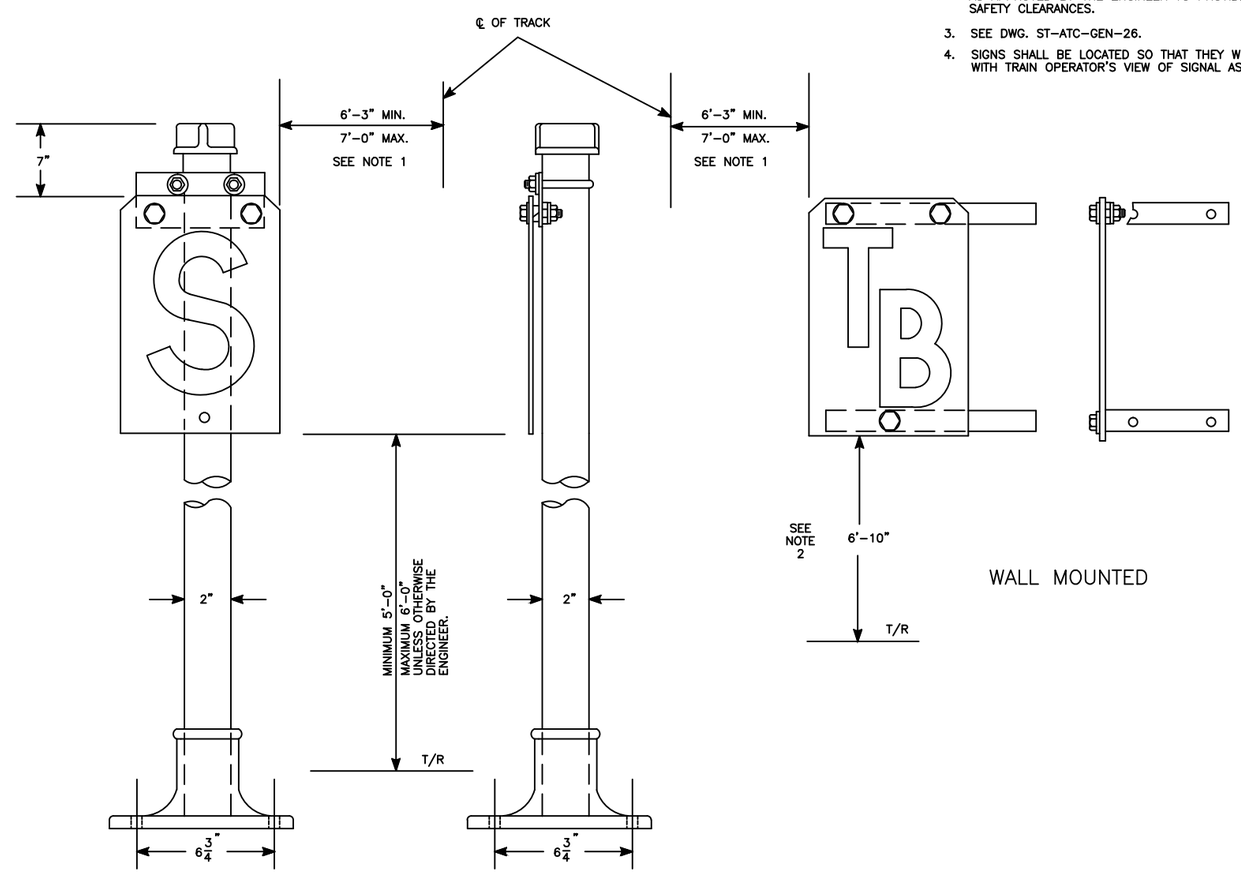

WALL MOUNTED

MAST MOUNTED

This Drawing Reflects a WMATA standard design approach. Project specific drawings must be developed by the Contractor which reflect this Design Philosophy

DESIGNED	GAH	2–00 DATE
DRAWN	JMR	2–00 DATE
CHECKED		DATE
APPROVED		DATE
UPDATED		DATE

REFERENCE DRAWINGS

NUMBER	DESCRIPTION

REVISIONS

DATE	BY	DESCRIPTION
08/2001	SYSP	Revised and issued by the Authority

WASHINGTON METROPOLITAN AREA TRANSIT AUTHORITY

DEPARTMENT OF TRANSIT SYSTEM DEVELOPMENT
OFFICE OF SYSTEMS

SUBMITTED _____ DATE

APPROVED DIRECTOR May 3, 2001 DATE

TYPICAL STATION STOP AND TURNBACK SIGN LAYOUTS

SCALE NONE

DRAWING NO. ST–ATC–GEN–015

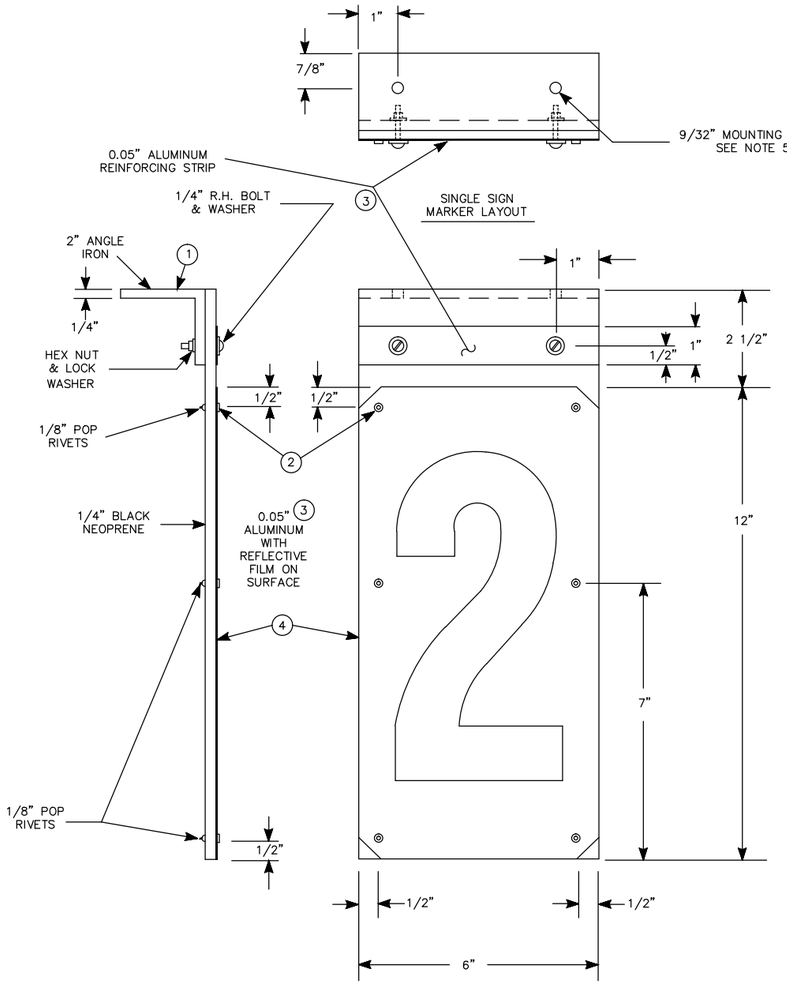

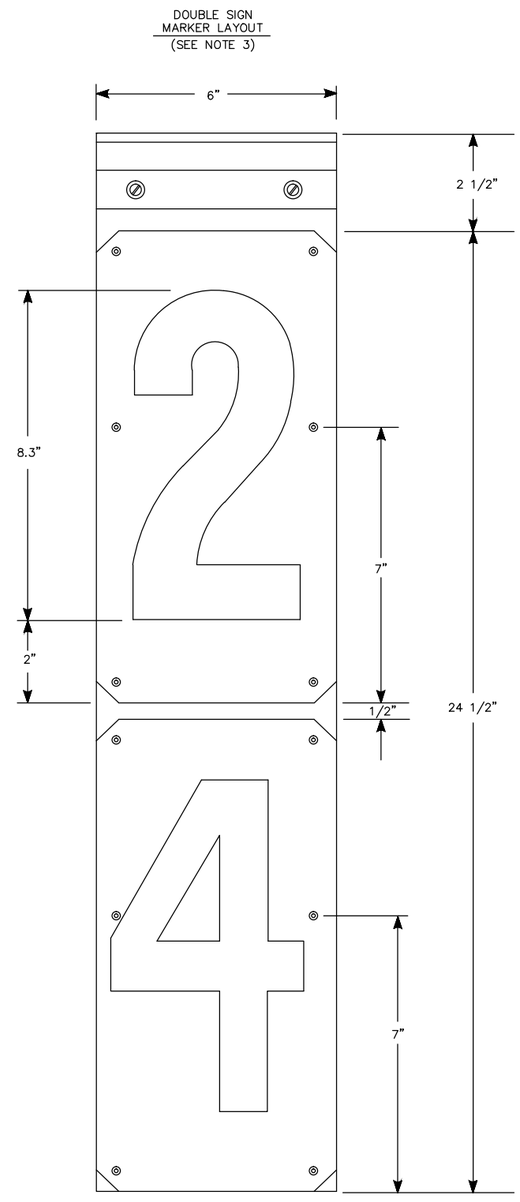

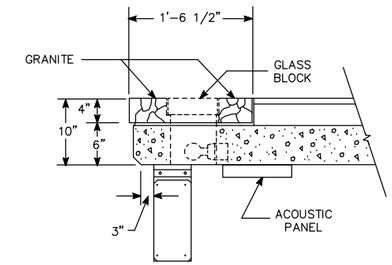

ELEVATION THROUGH PLATFORM–NTS

SEE NOTE 4

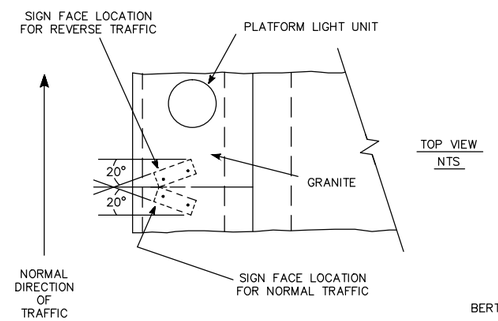

TOP VIEW

NTS

BERTHING MARKER LOCATION DIAGRAM

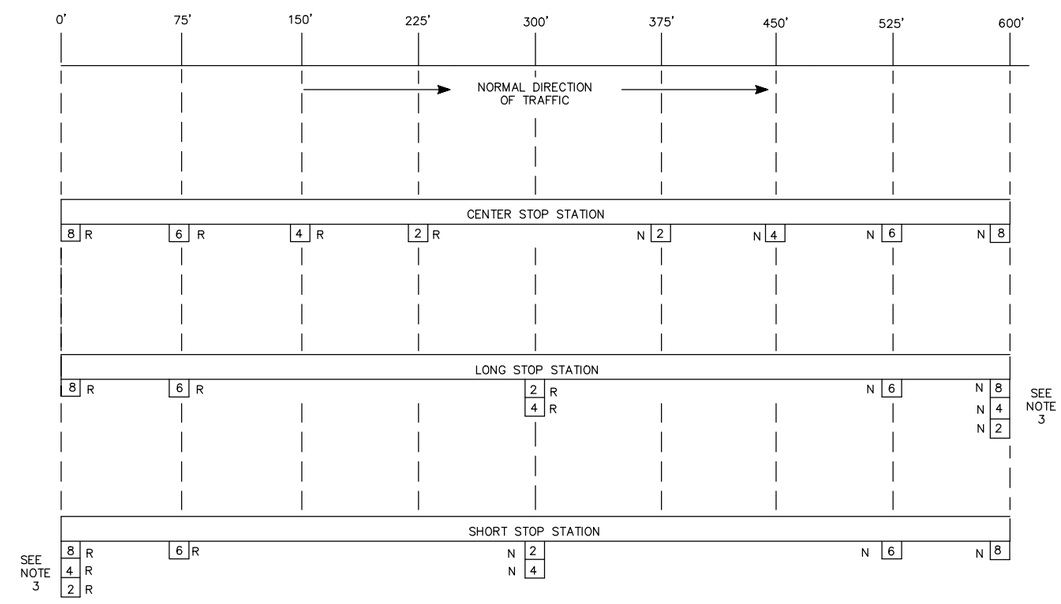

LEGEND:
N=MARKER FOR NORMAL TRAFFIC.
R=MARKER FOR REVERSE TRAFFIC.

NOTES:

1. THE CONTRACTOR SHALL PROVIDE EIGHT BERTHING MARKER SIGNS (FOUR FOR EACH DIRECTION OF TRAFFIC) UNDER EACH STATION PLATFORM FOR EACH TRACK SERVING THE STATION. (A TOTAL OF 16 SIGNS FOR EACH 2–TRACK STATION).
2. THE CONTRACTOR SHALL LOCATE AND POSITION THE APPROPRIATE BERTHING MARKER LAYOUTS IN COMPLIANCE WITH THE RESPECTIVE TYPES OF STATIONS AS SHOWN ON THE "BERTHING MARKER LOCATION DIAGRAM" AND AS INDICATED IN THE DETAILED VIEWS OF THE PLATFORM EDGE. THE "STATION TYPES" WILL BE DESIGNATED BY THE DESIGNATED RESIDENT ENGINEER.
3. AT INDIVIDUAL LOCATIONS WHERE THREE BERTHING MARKER SIGNS ARE REQUIRED, THE CONTRACTOR SHALL PROVIDE TWO BERTHING LAYOUTS SIDE–BY–SIDE (ONE "SINGLE" AND ONE "DOUBLE"). THE "SINGLE" MARKER LAYOUT SHALL BE LOCATED ADJACENT TO THE PLATFORM EDGE.
4. MOUNTING POSITION DETAIL VIEWS ARE FOR "SIDE PLATFORM" STATIONS. COMPARABLE "MIRROR IMAGE" VIEWS SHALL APPLY FOR "CENTER PLATFORM" STATIONS, I.E., WHERE THE STATION PLATFORM IS ON LEFT AS VIEWED FROM A TRAIN APPROACHING THE STATION IN THE NORMAL DIRECTION OF TRAFFIC.
5. METHOD OF MOUNTING BERTHING MARKER LAYOUT TO THE UNDERSIDE OF THE PLATFORM EDGE SHALL HAVE THE PRIOR APPROVAL OF THE DESIGNATED RESIDENT ENGINEER.

MATERIALS

1. 1/4" X 2" ANGLE IRON SHALL BE HOT–DIP GALVANIZED.
2. USE SIX 1/8–INCH POP–RIVETS PER SIGN, LOCATED AS SHOWN. USE REINFORCING WASHERS UNDER POP–RIVETS.
3. ALL EDGES OF SIGNS AND REINFORCING STRIPS SHALL BE SMOOTHED AND DE–BURRED TO LEAVE NO SHARP EDGES OR CORNERS.
4. REFLECTIVE FILM SHALL BE 3M SCOTCHLITE HIGH INTENSITY PRESSURE SENSITIVE SHEETING OR APPROVED EQUAL. BACKGROUND SHALL BE GREEN, NUMERALS SILVER. LETTERING STYLE, HELVETICA MEDIUM (ELONGATED).

This Drawing Reflects a WMATA standard design approach. Project specific drawings must be developed by the Contractor which reflect this Design Philosophy

DESIGNED	GAH	2–00 DATE
DRAWN	JMR	2–00 DATE
CHECKED		DATE
APPROVED		DATE
UPDATED		DATE

REFERENCE DRAWINGS

NUMBER	DESCRIPTION

REVISIONS

DATE	BY	DESCRIPTION
08/2001	SYSP	Revised and issued by the Authority

WASHINGTON METROPOLITAN AREA TRANSIT AUTHORITY

DEPARTMENT OF TRANSIT SYSTEM DEVELOPMENT
OFFICE OF SYSTEMS

SUBMITTED _____ DATE

APPROVED _____ DIRECTOR May 3, 2001 DATE

TYPICAL BERTHING MARKER LAYOUTS

SCALE NONE

DRAWING NO. ST–ATC–GEN–016

NOTES: 1. ALTERNATE SECTIONAL CONCRETE FOUNDATIONS FOR SIGNALS SHALL BE AS RECOMMENDED IN PART 14.4.1 OF THE AREMA SIGNAL MANUAL.

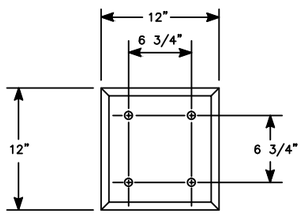

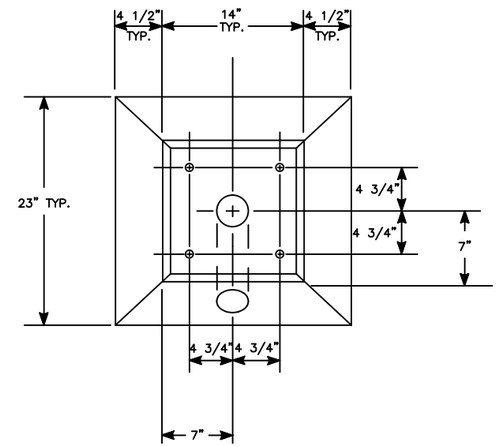

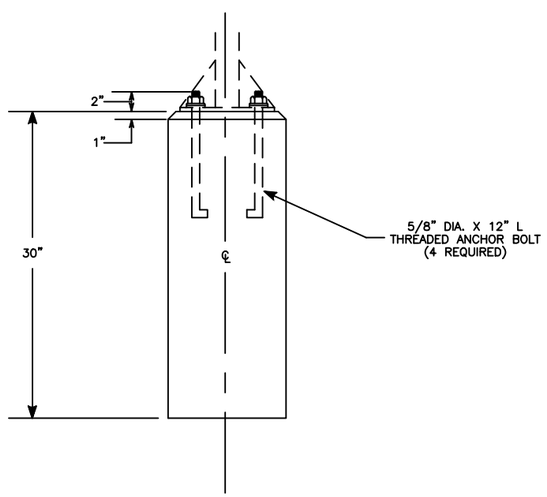

SIGN AND JUNCTION BOX FOUNDATION

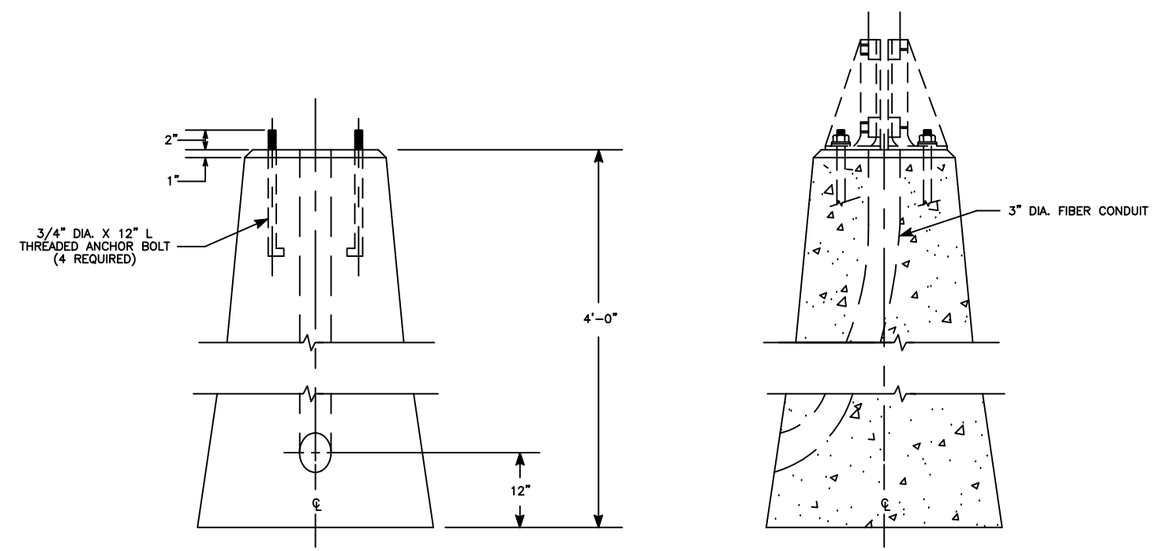

SIGNAL AND PUSHBUTTON FOUNDATION

This Drawing Reflects a WMATA standard design approach. Project specific drawings must be developed by the Contractor which reflect this Design Philosophy

DESIGNED	GAH	2-00 DATE
DRAWN	JMR	2-00 DATE
CHECKED		DATE
APPROVED		DATE
UPDATED		DATE

REFERENCE DRAWINGS

NUMBER	DESCRIPTION

REVISIONS

DATE	BY	DESCRIPTION
08/2001	SYSP	Revised and issued by the Authority

WASHINGTON METROPOLITAN AREA TRANSIT AUTHORITY

DEPARTMENT OF TRANSIT SYSTEM DEVELOPMENT
OFFICE OF SYSTEMS

SUBMITTED _____ DATE

APPROVED _____ DIRECTOR May 3, 2001 DATE

TYPICAL FOUNDATIONS FOR SIGNAL, SIGN AND PUSHBUTTON LAYOUTS

BALLASTED TRACK

SCALE NONE

DRAWING NO. ST-ATC-GEN-017

This Drawing Reflects a WMATA standard design approach. Project specific drawings must be developed by the Contractor which reflect this Design Philosophy

NOTES:
1. 1 SECTION = 75', 8 SECTIONS = 600'.
2. SAME AS CENTER STOP.

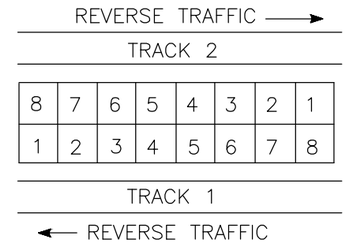

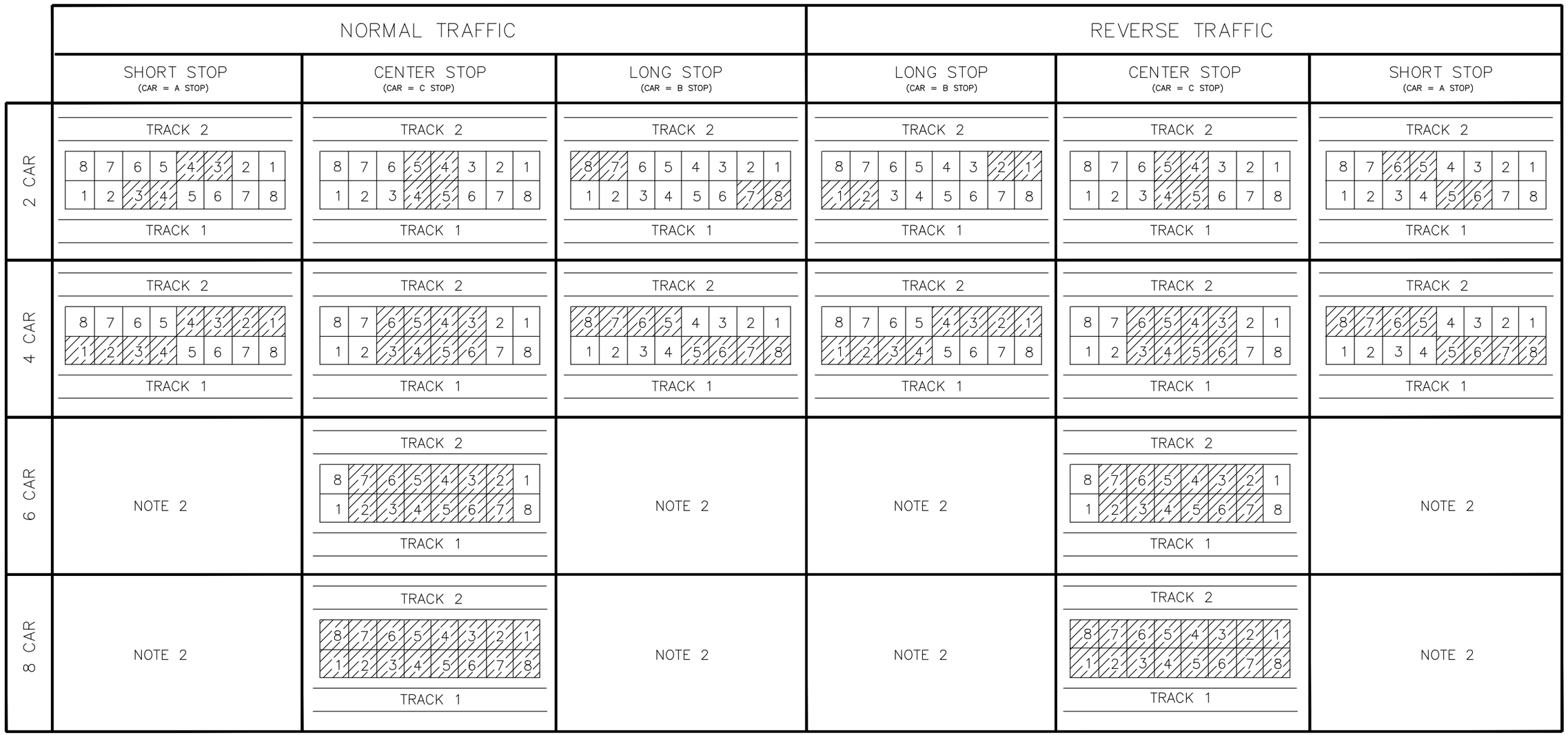

DESIGNED	GAH	2-00 DATE
DRAWN	JMR	2-00 DATE
CHECKED		DATE
APPROVED		DATE
UPDATED		DATE

REFERENCE DRAWINGS

NUMBER	DESCRIPTION

REVISIONS

DATE	BY	DESCRIPTION
08/2001	SYSP	Revised and issued by the Authority

WASHINGTON METROPOLITAN AREA TRANSIT AUTHORITY

DEPARTMENT OF TRANSIT SYSTEM DEVELOPMENT
OFFICE OF SYSTEMS

SUBMITTED _____ DATE

APPROVED DIRECTOR _____ May 3, 2001 DATE

TYPICAL PLATFORM EDGELIGHT AND PROGRAM STOP TRAIN PLACEMENT DIAGRAM

SCALE: NONE

DRAWING NO. ST-ATC-GEN-018

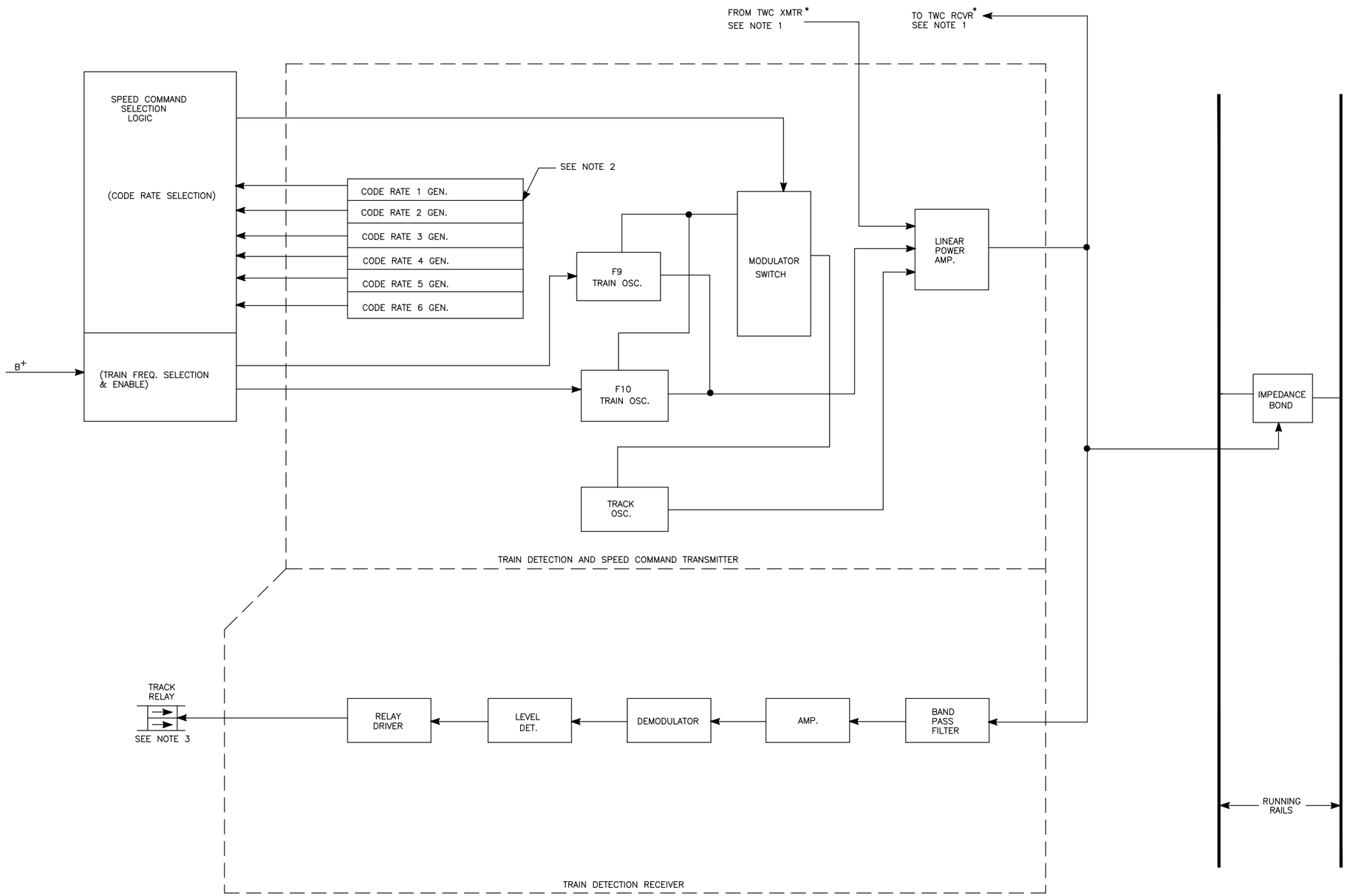

NOTES:

1. * WHERE REQUIRED.
2. USE ONLY CODE RATE GENERATORS REQUIRED AT EACH LOCATION.
3. TRACK RELAY SHALL BE TWO–COIL, VITAL, BIASED NEUTRAL RELAY WIRED AS SHOWN ON SPEED LIMIT COMMAND CIRCUITS.

This Drawing Reflects a WMATA standard design approach. Project specific drawings must be developed by the Contractor which reflect this Design Philosophy

DESIGNED	GAH	2–00 DATE
DRAWN	JMR	2–00 DATE
CHECKED		DATE
APPROVED		DATE
UPDATED		DATE

REFERENCE DRAWINGS

NUMBER	DESCRIPTION

REVISIONS

DATE	BY	DESCRIPTION
08/2001	SYSP	Revised and issued by the Authority

WASHINGTON METROPOLITAN AREA TRANSIT AUTHORITY

DEPARTMENT OF TRANSIT SYSTEM DEVELOPMENT
OFFICE OF SYSTEMS

SUBMITTED _____ DATE

APPROVED DIRECTOR _____ May 3, 2001 DATE

TYPICAL ATP TRACK MODULE BLOCK DIAGRAM

SCALE NONE

DRAWING NO. ST–ATC–GEN–020

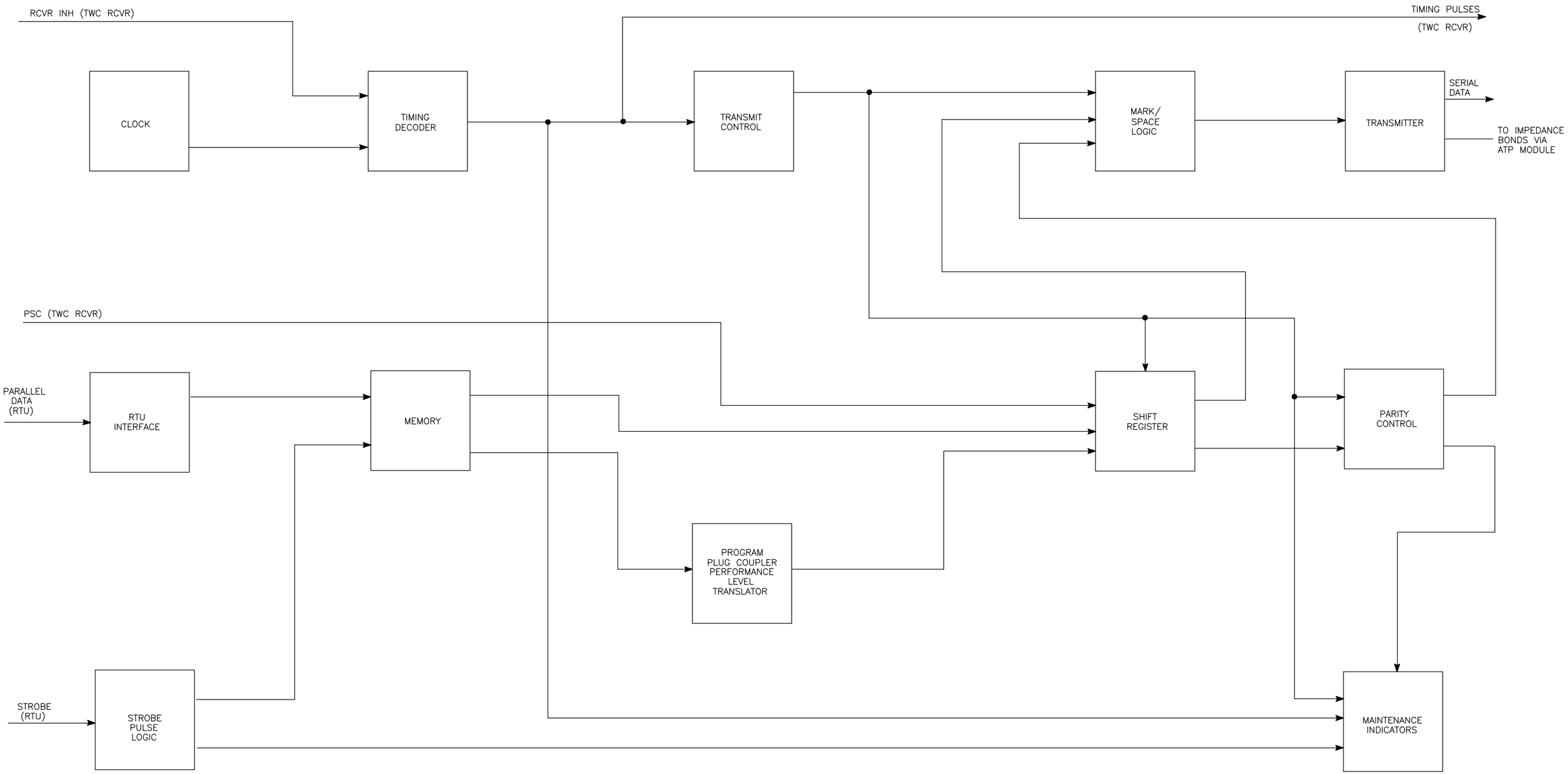

This Drawing Reflects a WMATA standard design approach. Project specific drawings must be developed by the Contractor which reflect this Design Philosophy

DESIGNED	GAH	2-00 DATE
DRAWN	JMR	2-00 DATE
CHECKED		DATE
APPROVED		DATE
UPDATED		DATE

REFERENCE DRAWINGS

NUMBER	DESCRIPTION

REVISIONS

DATE	BY	DESCRIPTION
08/2001	SYSP	Revised and issued by the Authority

WASHINGTON METROPOLITAN AREA TRANSIT AUTHORITY

DEPARTMENT OF TRANSIT SYSTEM DEVELOPMENT
OFFICE OF SYSTEMS

SUBMITTED _____ DATE

APPROVED _____ DIRECTOR May 3, 2001 DATE

TYPICAL TWC TRANSMITTER BLOCK DIAGRAM

SCALE NONE

DRAWING NO. ST-ATC-GEN-022

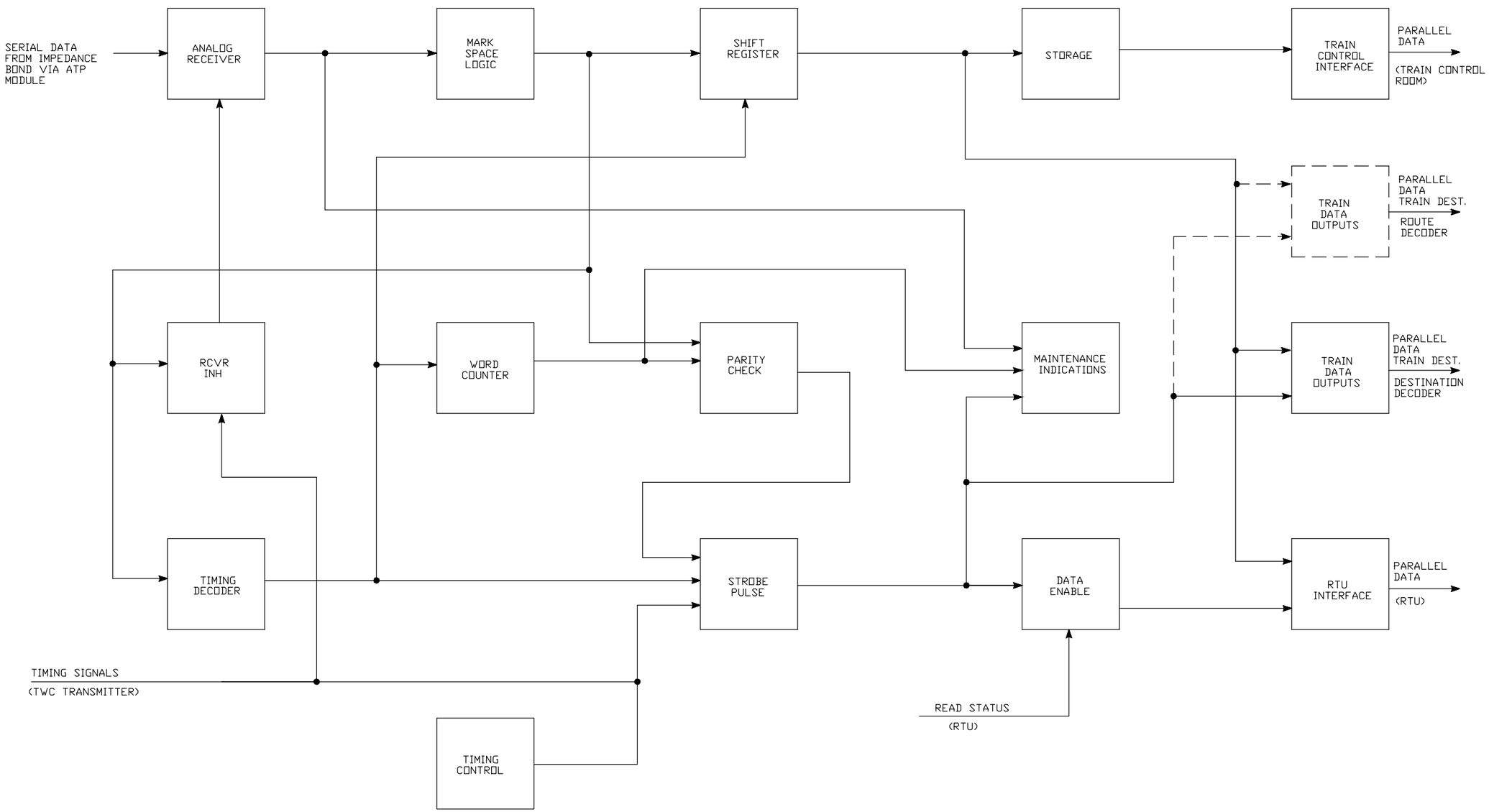

This Drawing Reflects a WMATA standard design approach. Project specific drawings must be developed by the Contractor which reflect this Design Philosophy

DESIGNED	GAH	2-00 DATE
DRAWN	JMR	2-00 DATE
CHECKED		DATE
APPROVED		DATE
UPDATED		DATE

REFERENCE DRAWINGS

NUMBER	DESCRIPTION

REVISIONS

DATE	BY	DESCRIPTION
08/2001	SYSP	Revised and issued by the Authority

WASHINGTON METROPOLITAN AREA TRANSIT AUTHORITY

DEPARTMENT OF TRANSIT SYSTEM DEVELOPMENT
OFFICE OF SYSTEMS

SUBMITTED _____ DATE

APPROVED _____ DIRECTOR — May 3, 2001 DATE

TYPICAL TWC RECEIVER BLOCK DIAGRAM

SCALE: NONE

DRAWING NO. ST-ATC-GEN-023

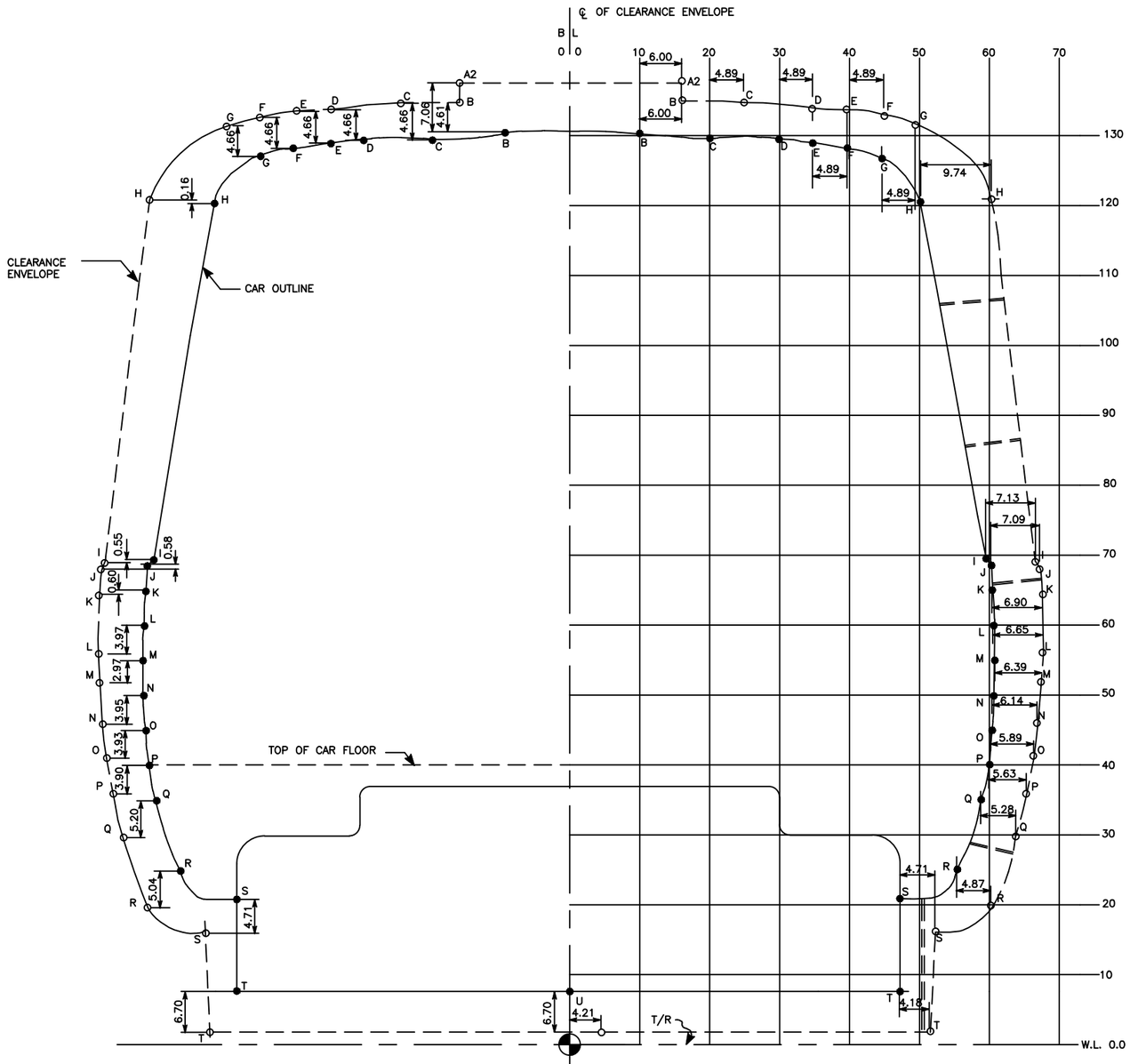

SHOWING VERTICAL DIMENSIONS

SHOWING HORIZONTAL DIMENSIONS

A.T.C. CLEARANCE ENVELOPE

STATIC OUTLINE (CAR OUTLINE)		
PT.	B.L.	W.L.
B	10.00	130.37
C	20.00	129.97
D	30.00	129.30
E	35.00	128.75
F	40.00	127.91
G	45.00	126.50
H	50.72	120.50
I	59.63	69.44
J	60.31	68.75
K	60.63	65.00
L	60.84	60.00
M	60.88	55.00
N	60.69	50.00
O	60.44	45.00
P	60.00	40.00
Q	59.16	35.00
R	55.50	25.00
S	47.50	20.81
T	47.50	7.63
U	0.00	7.63

CLEARANCE ENVELOPE *		
PT.	B.L.	W.L.
A2	16.00	137.43
B	16.00	134.98
C	24.89	134.63
D	34.89	133.96
E	39.89	133.41
F	44.89	132.57
G	49.89	131.16
H	60.46	120.34
I	66.76	68.89
J	67.40	68.17
K	67.53	64.40
L	67.49	56.03
M	67.27	52.03
N	66.83	46.05
O	66.33	41.07
P	65.63	36.10
Q	64.44	29.80
R	60.37	19.96
S	52.21	16.10
T	51.68	0.93
U	4.21	0.93

* – DYNAMIC OUTLINE PLUS TWO INCHES (NO ENCROACHMENT AREA)

NOTE: ALL DIMENSIONS SHOWN IN INCHES.

MAXIMUM LIMITS – DYNAMIC OUTLINE IN PROXIMITY TO SPECIAL TRACKWORK

THE MAXIMUM HORIZONTAL LIMITS OF THE DYNAMIC OUTLINE OF THE STANDARD WMATA DESIGN VEHICLE AS IT MOVES THROUGH TURNOUTS FROM A LEVEL, TANGENT RUNNING TRACK ARE SHOWN ON INFORMATION DRAWING ST–ATC–GEN–027.

This Drawing Reflects a WMATA standard design approach. Project specific drawings must be developed by the Contractor which reflect this Design Philosophy

DESIGNED GAH 11–00 DATE
DRAWN JMR 11–00 DATE
CHECKED DATE
APPROVED DATE
UPDATED DATE

REFERENCE DRAWINGS	
NUMBER	DESCRIPTION

REVISIONS		
DATE	BY	DESCRIPTION
3/30/17	SYSP	Revised and issued by the Authority

WASHINGTON METROPOLITAN AREA TRANSIT AUTHORITY

DEPARTMENT OF TRANSIT SYSTEM DEVELOPMENT
OFFICE OF SYSTEMS

SUBMITTED DATE

APPROVED DIRECTOR May 3, 2001 DATE

ATC CLEARANCE ENVELOPE

SCALE NONE

DRAWING NO. ST–ATC–GEN–026

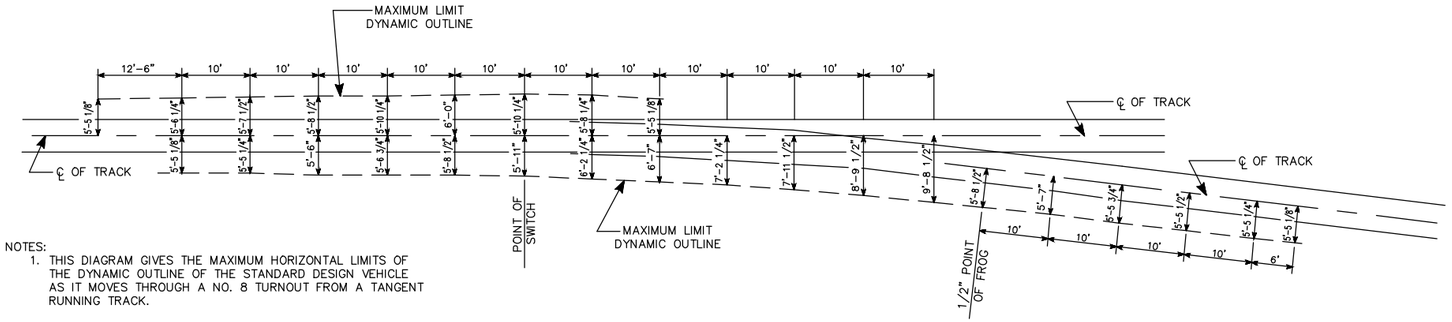

NOTES:

1. THIS DIAGRAM GIVES THE MAXIMUM HORIZONTAL LIMITS OF THE DYNAMIC OUTLINE OF THE STANDARD DESIGN VEHICLE AS IT MOVES THROUGH A NO. 8 TURNOUT FROM A TANGENT RUNNING TRACK.
2. FOR CLEARANCES BETWEEN THE DYNAMIC OUTLINE AND STRUCTURES OR INTERMITTENT INSTALLATIONS, REFER TO THE CLEARANCE DIAGRAMS IN THE MANUAL OF DESIGN CRITERIA FOR THE PARTICULAR TYPE OF CONSTRUCTION INVOLVED.
3. IF THE TURNOUT IS MADE FROM A CURVED OR SUPERELEVATED TRACK, THE VALUES SHOWN ON THIS STANDARD MUST BE CORRECTED FOR THAT SUPERELEVATION AND CURVATURE.

NO. 8 TURNOUT

REPRODUCTION OF DESIGN
CRITERIA FIG. II 47
(BASED ON A.R.E.A.
PLAN NO. 8–62)

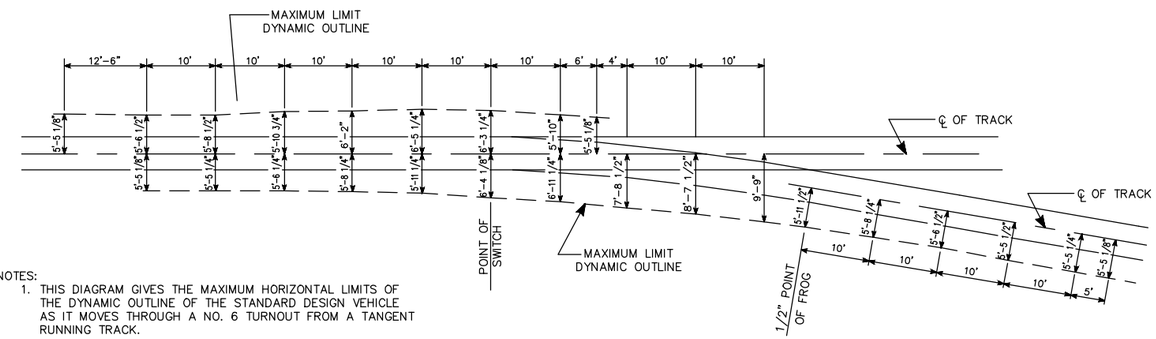

NOTES:

1. THIS DIAGRAM GIVES THE MAXIMUM HORIZONTAL LIMITS OF THE DYNAMIC OUTLINE OF THE STANDARD DESIGN VEHICLE AS IT MOVES THROUGH A NO. 6 TURNOUT FROM A TANGENT RUNNING TRACK.
2. FOR CLEARANCES BETWEEN THE DYNAMIC OUTLINE AND STRUCTURES OR INTERMITTENT INSTALLATIONS, REFER TO THE CLEARANCE DIAGRAMS IN THE MANUAL OF DESIGN CRITERIA FOR THE PARTICULAR TYPE OF CONSTRUCTION INVOLVED.
3. IF THE TURNOUT IS MADE FROM A CURVED OR SUPERELEVATED TRACK, THE VALUES SHOWN ON THIS STANDARD MUST BE CORRECTED FOR THAT SUPERELEVATION AND CURVATURE.

NO. 6 TURNOUT

REPRODUCTION OF DESIGN
CRITERIA FIG. II 46
(BASED ON A.R.E.A.
PLAN NO. 6–62)

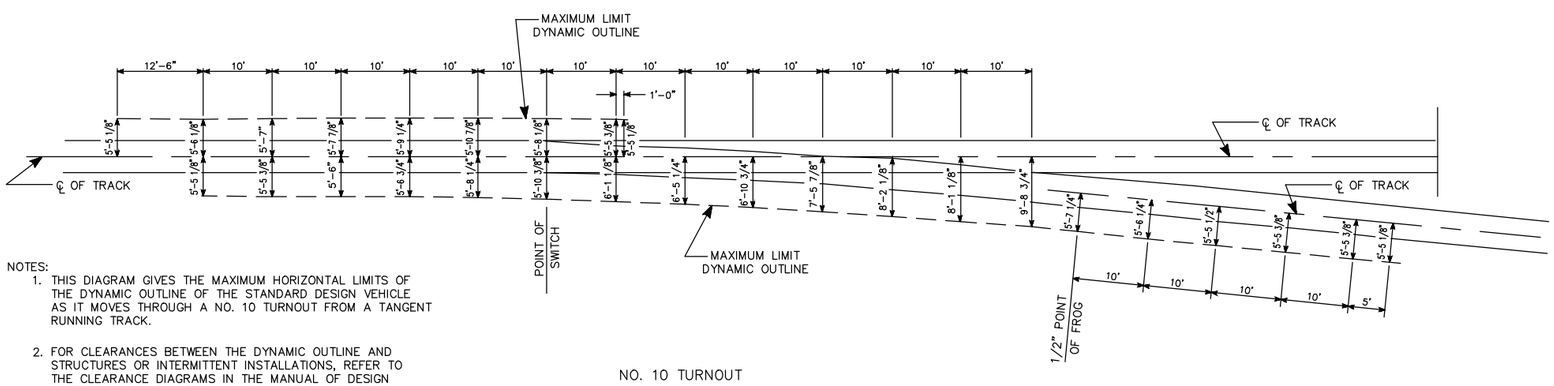

NOTES:

1. THIS DIAGRAM GIVES THE MAXIMUM HORIZONTAL LIMITS OF THE DYNAMIC OUTLINE OF THE STANDARD DESIGN VEHICLE AS IT MOVES THROUGH A NO. 10 TURNOUT FROM A TANGENT RUNNING TRACK.
2. FOR CLEARANCES BETWEEN THE DYNAMIC OUTLINE AND STRUCTURES OR INTERMITTENT INSTALLATIONS, REFER TO THE CLEARANCE DIAGRAMS IN THE MANUAL OF DESIGN CRITERIA FOR THE PARTICULAR TYPE OF CONSTRUCTION INVOLVED.
3. IF THE TURNOUT IS MADE FROM A CURVED OR SUPERELEVATED TRACK, THE VALUES SHOWN ON THIS STANDARD MUST BE CORRECTED FOR THAT SUPERELEVATION AND CURVATURE.

NO. 10 TURNOUT

REPRODUCTION OF DESIGN
CRITERIA FIG. II 48
(BASED ON A.R.E.A.
PLAN NO. 10–62)

This Drawing Reflects a WMATA standard design approach. Project specific drawings must be developed by the Contractor which reflect this Design Philosophy

DESIGNED	GAH	11–00 DATE
DRAWN	JMR	11–00 DATE
CHECKED		DATE
APPROVED		DATE
UPDATED		DATE

REFERENCE DRAWINGS

NUMBER	DESCRIPTION

REVISIONS

DATE	BY	DESCRIPTION
08/2001	SYSP	Revised and issued by the Authority

WASHINGTON METROPOLITAN AREA TRANSIT AUTHORITY

DEPARTMENT OF TRANSIT SYSTEM DEVELOPMENT
OFFICE OF SYSTEMS

SUBMITTED DATE

APPROVED DIRECTOR May 3, 2001 DATE

HORIZONTAL LIMITS OF DYNAMIC OUTLINE OF DESIGN VEHICLE THROUGH TURNOUTS

SCALE NONE

DRAWING NO. ST–ATC–GEN–027

WMATA

TYPICAL CIRCUITS

BOOK OF PLANS

This Drawing Reflects a WMATA standard design approach. Project specific drawings must be developed by the Contractor which reflect this Design Philosophy

DESIGNED	GAH	2-00 DATE
DRAWN	JMR	2-00 DATE
CHECKED		DATE
APPROVED		DATE
UPDATED		DATE

REFERENCE DRAWINGS

NUMBER	DESCRIPTION

REVISIONS

DATE	BY	DESCRIPTION
08/2001	SYSP	Revised and issued by the Authority

WASHINGTON METROPOLITAN AREA TRANSIT AUTHORITY

DEPARTMENT OF TRANSIT SYSTEM DEVELOPMENT
OFFICE OF SYSTEMS

SUBMITTED _____ DATE

APPROVED _____ DIRECTOR May 3, 2001 DATE

TYPICAL CIRCUITS – GENERAL

SCALE NONE

DRAWING NO. ST-ATC-CKT-000

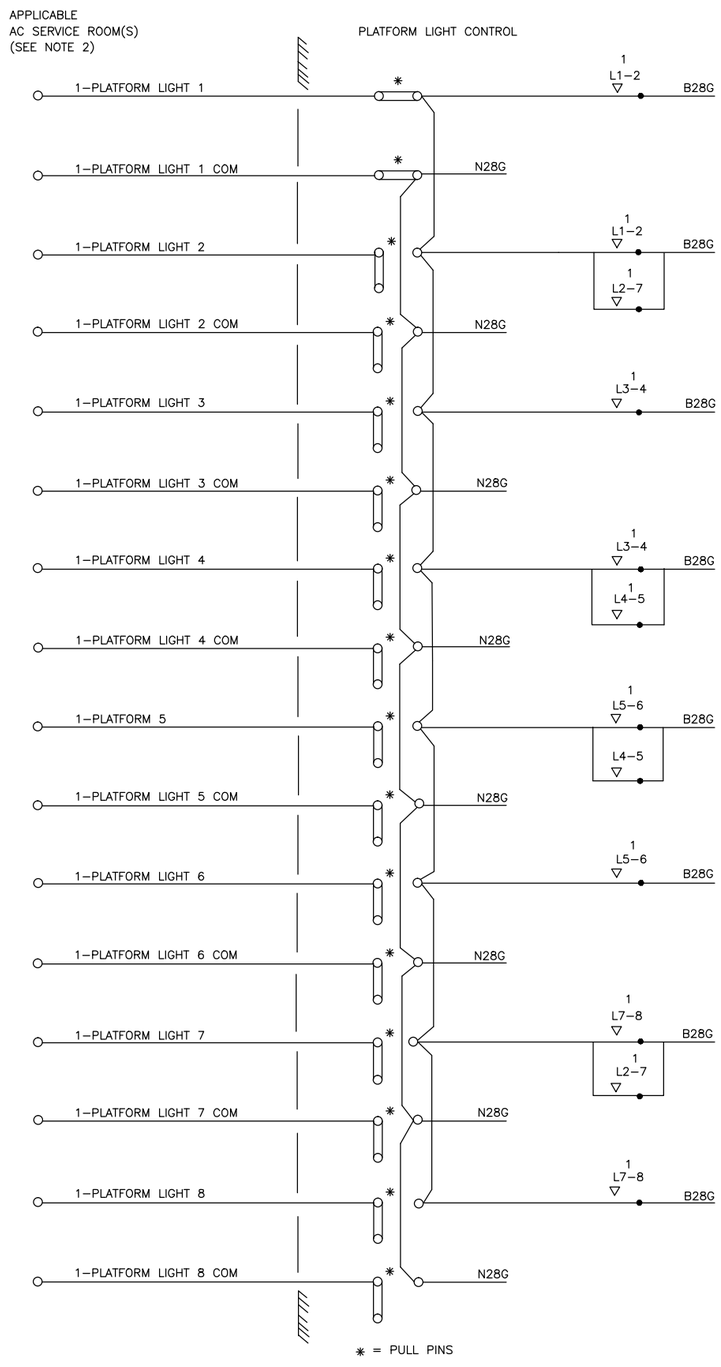

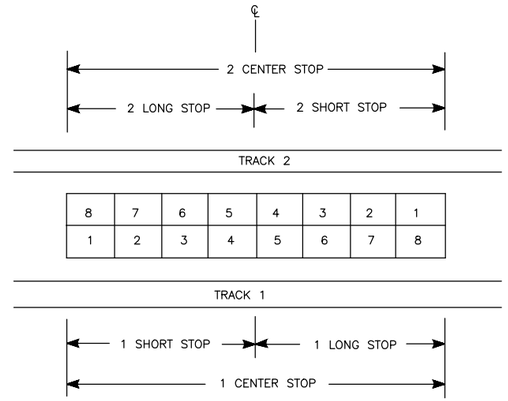

NOTES:

1. CIRCUITS SHOWN FOR TRACK 1. EQUIVALENT FACILITIES REQUIRED FOR TRACK 2.
2. THE CONTRACTOR SHALL PROVIDE PLATFORM LIGHT CONTROL WIRING TO THE "COMBINED", "NEAR", AND/OR "FAR" AC SERVICE ROOM(S), AS APPLICABLE FOR EACH STATION PLATFORM.

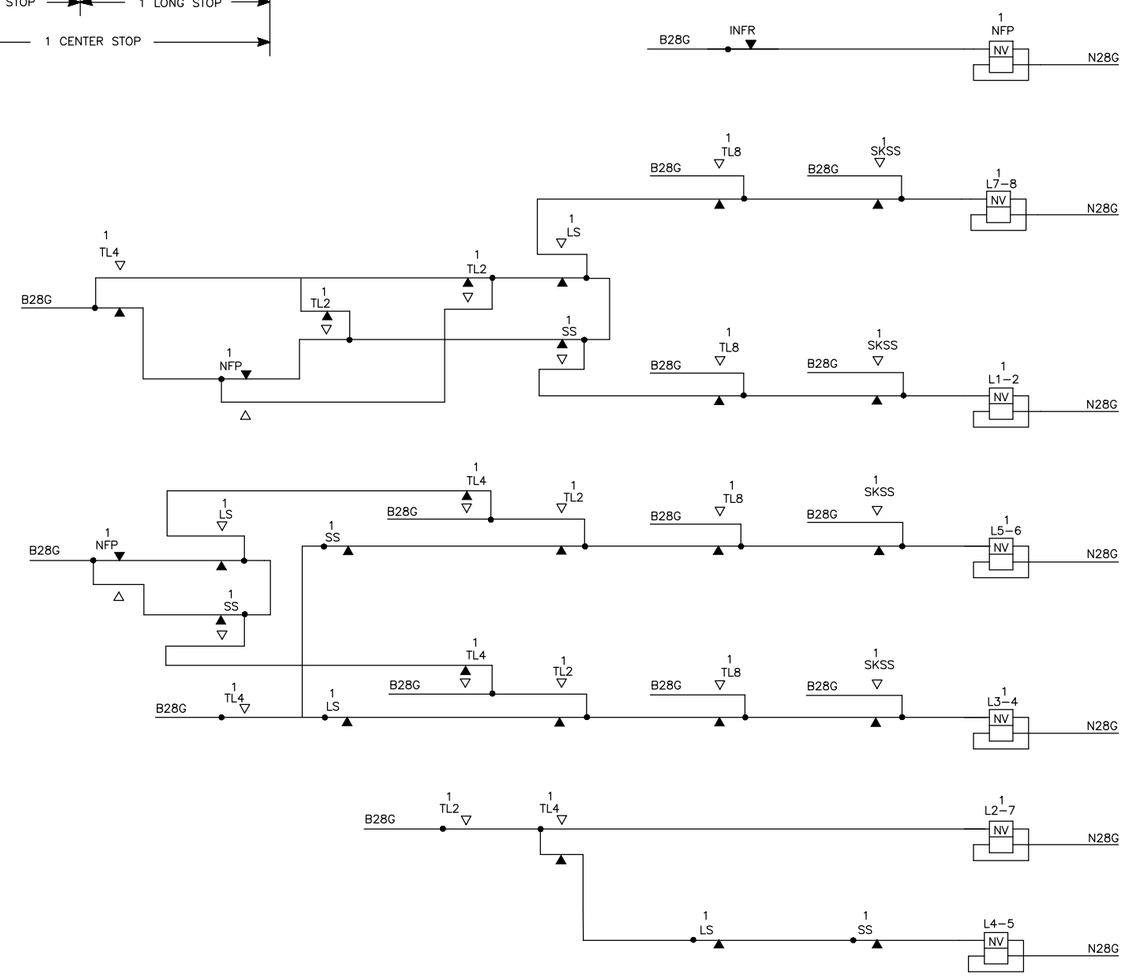

This Drawing Reflects a WMATA standard design approach. Project specific drawings must be developed by the Contractor which reflect this Design Philosophy

DESIGNED	GAH	2-00 DATE
DRAWN	JMR	2-00 DATE
CHECKED		DATE
APPROVED		DATE
UPDATED		DATE

REFERENCE DRAWINGS

NUMBER	DESCRIPTION

REVISIONS

DATE	BY	DESCRIPTION
08/2001	SYSP	Revised and issued by the Authority

WASHINGTON METROPOLITAN AREA TRANSIT AUTHORITY

DEPARTMENT OF TRANSIT SYSTEM DEVELOPMENT
OFFICE OF SYSTEMS

SUBMITTED _____ DATE

APPROVED _____ DIRECTOR May 3, 2001 DATE

TYPICAL PLATFORM EDGELIGHT CONTROL CIRCUIT (SHEET 1 OF 2)

SCALE NONE

DRAWING NO. ST-ATC-CKT-001

NOTES:
1. CIRCUIT SHOWN FOR TRACK 1. EQUIVALENT CIRCUIT REQUIRED FOR TRACK 2.
2. TR CONTACT SHALL BE THE TRACK CIRCUIT WHICH CONTAINS THE 1200 FT PROGRAM STOP MARKER COILS.

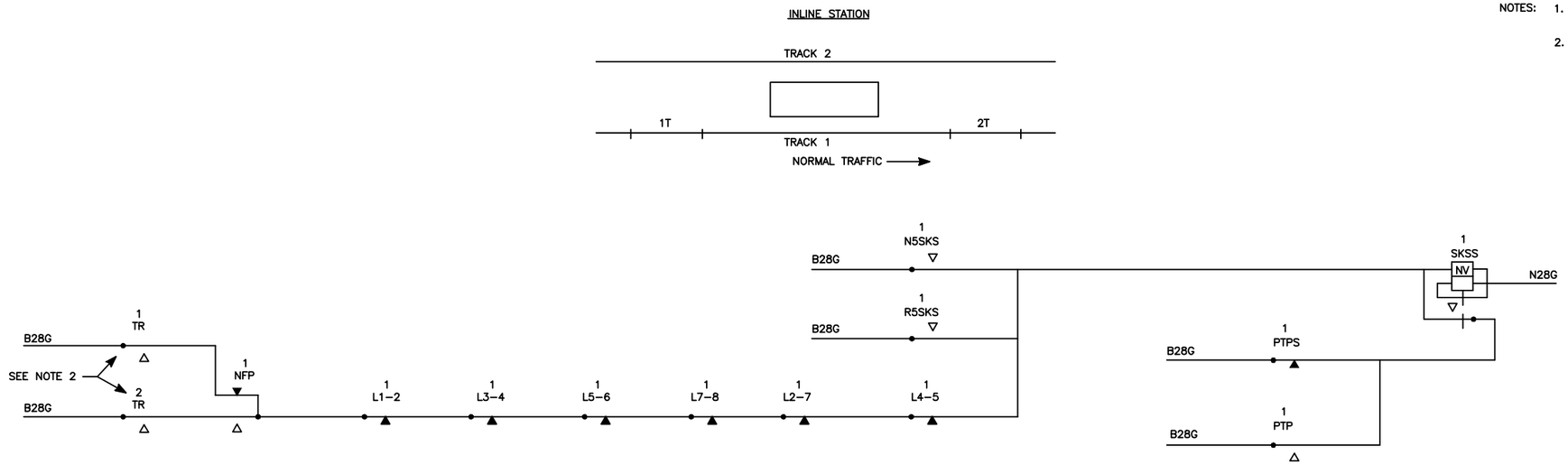

NOTES:
1. THIS CIRCUIT REQUIRED WHEN INITIATING TRACK CIRCUITS ARE LOCATED UPSTREAM OF INTERLOCKING. WHEN NO INITIATING TRACK CIRCUITS ARE LOCATED UPSTREAM OF INTERLOCKING, THE CIRCUIT SHOWN ABOVE FOR INLINE STATIONS SHALL BE USED.
2. TR CONTACT SHALL BE THE TRACK CIRCUIT WHICH CONTAINS THE 1200 FT PROGRAM STOP MARKER COILS EXCEPT WHEN THE 1200 FT MARKER COILS ARE LOCATED WITHIN THE INTERLOCKING. IN THIS CASE, THE TR CONTACT SHALL BE THE TRACK CIRCUIT UPSTREAM OF THE INTERLOCKING HOME SIGNAL. WHEN THERE ARE NO 1200 FT PROGRAM STOP MARKER COILS, SUCH AS AT TERMINALS WHERE THERE IS MANUAL OPERATION, THE TR CONTACT SHALL BE A TRACK CIRCUIT THAT IS 300' TO 400' AWAY FROM THE PLATFORM ENTERING END.

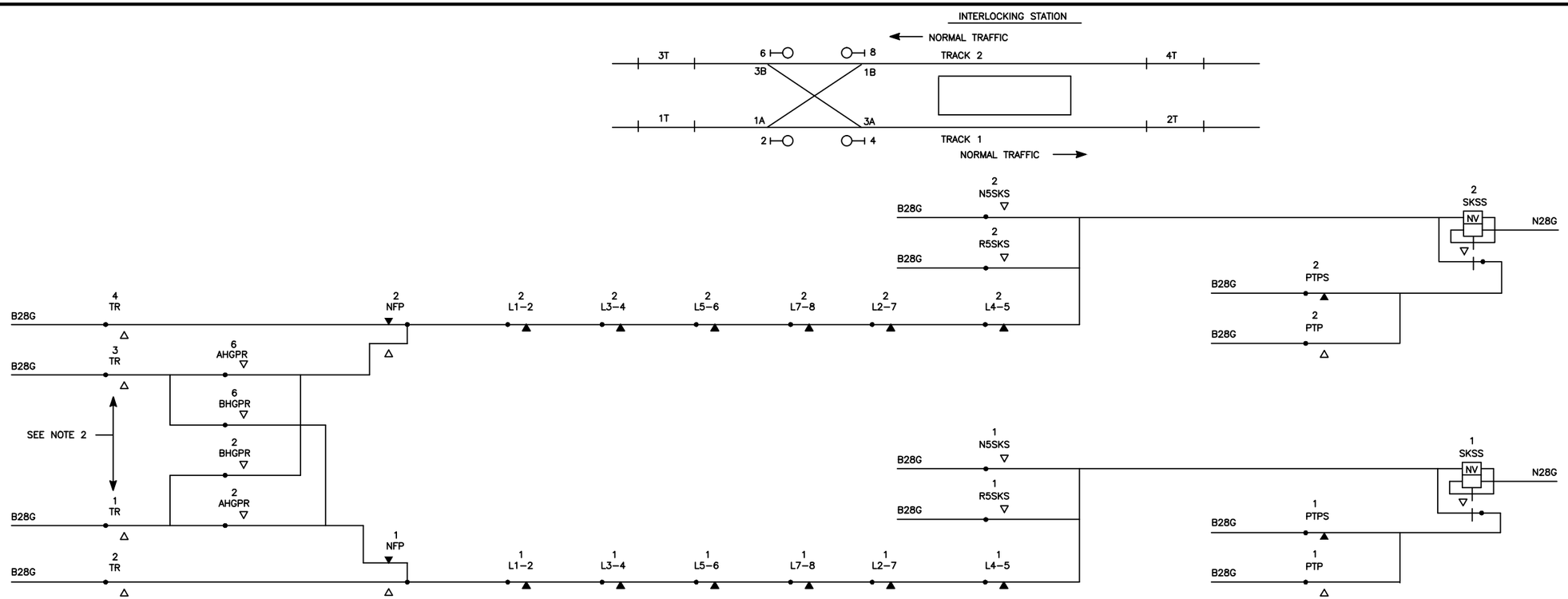

This Drawing Reflects a WMATA standard design approach. Project specific drawings must be developed by the Contractor which reflect this Design Philosophy

DESIGNED	GAH	2–00 DATE
DRAWN	JMR	2–00 DATE
CHECKED		DATE
APPROVED		DATE
UPDATED		DATE

REFERENCE DRAWINGS

NUMBER	DESCRIPTION

REVISIONS

DATE	BY	DESCRIPTION
08/2001	SYSP	Revised and issued by the Authority

WASHINGTON METROPOLITAN AREA TRANSIT AUTHORITY

DEPARTMENT OF TRANSIT SYSTEM DEVELOPMENT
OFFICE OF SYSTEMS

SUBMITTED _____ DATE

APPROVED _____ DIRECTOR May 3, 2001 DATE

TYPICAL PLATFORM EDGELIGHT CONTROL CIRCUITS (SHEET 2 OF 2)

SCALE: NONE

DRAWING NO. ST–ATC–CKT–002

NOTES:

1. CIRCUITS SHOWN FOR TRACK 1. EQUIVALENT CIRCUITS REQUIRED FOR TRACK 2, EXCLUDING THE MP & HP INPUTS.
2. TR CONTACT SHALL BE THE PLATFORM TRACK.
3. SEE ATC TECHNICAL APPENDIX & SITE SPECIFIC DRAWINGS.
4. TEST LINKS NORMALLY OPEN

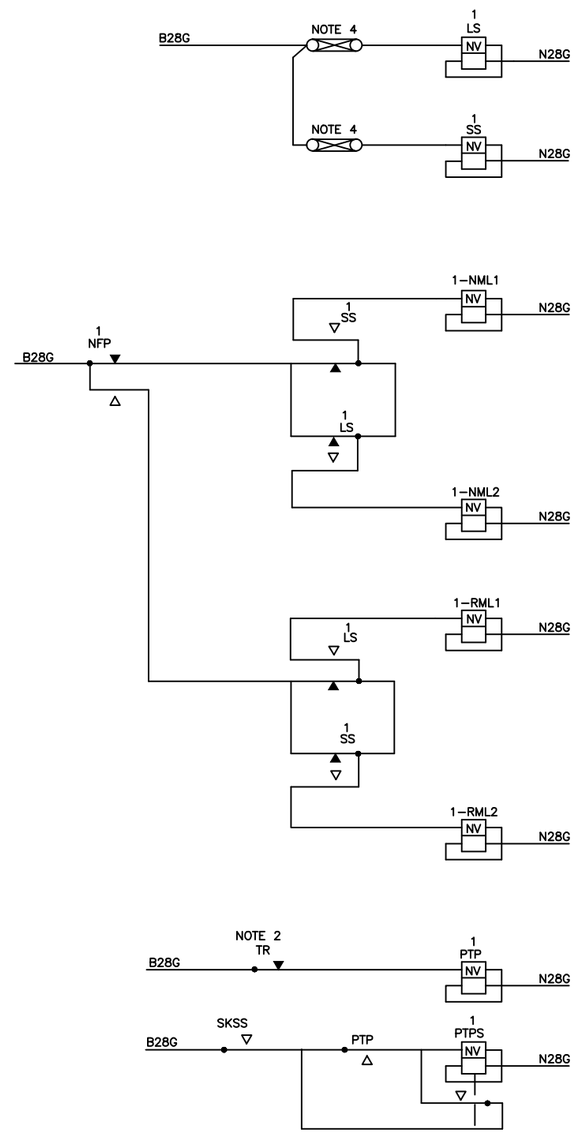

This Drawing Reflects a WMATA standard design approach. Project specific drawings must be developed by the Contractor which reflect this Design Philosophy

DESIGNED	ACC	11/04/16 DATE
DRAWN	DMR	11/04/16 DATE
CHECKED		DATE
APPROVED		DATE

REFERENCE DRAWINGS

NUMBER	DESCRIPTION

REVISIONS

DATE	BY	DESCRIPTION
08/2001	SYSP	REVISED AND ISSUED BY THE AUTHORITY
03/30/2017	MM	REVISED FOR FQ15192

WASHINGTON METROPOLITAN TRANSIT AUTHORITY

DEPARTMENT OF TRANSIT INFRASTRUCTURE AND ENGINEERING SERVICES
OFFICE OF THE CHIEF ENGINEER, INFRASTRUCTURE

SUBMITTED DATE

APPROVED CHIEF ENGINEER DATE

TYPICAL PROGRAM STOP CONTROL CIRCUITS

SCALE

DRAWING NO. ST-ATC-CKT-003

SHEET NO.

NOTES: 1. CIRCUITS SHOWN FOR TRACK 1. EQUIVALENT CIRCUITS REQUIRED FOR TRACK 2.

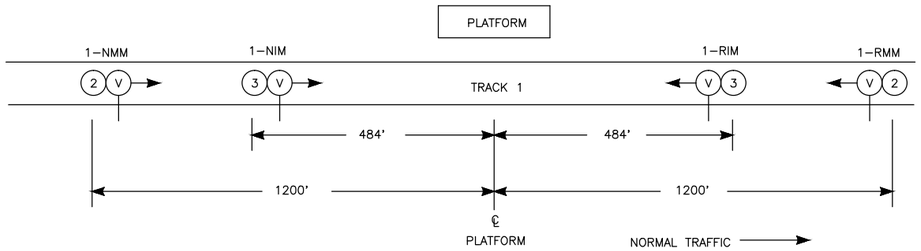

TYPE OF STOP NORMAL TRAFFIC (PLATFORM)	TYPE OF STOP REVERSE TRAFFIC (PLATFORM)	TYPE OF STOP (CAR)	LINE ENERGIZED POSITIVE	FREQUENCY
SHORT	LONG	A	L1	7
LONG	SHORT	B	L2	8
CENTER	CENTER	C	L3	9
SKIP	SKIP	SKIP	L1 & L2	6

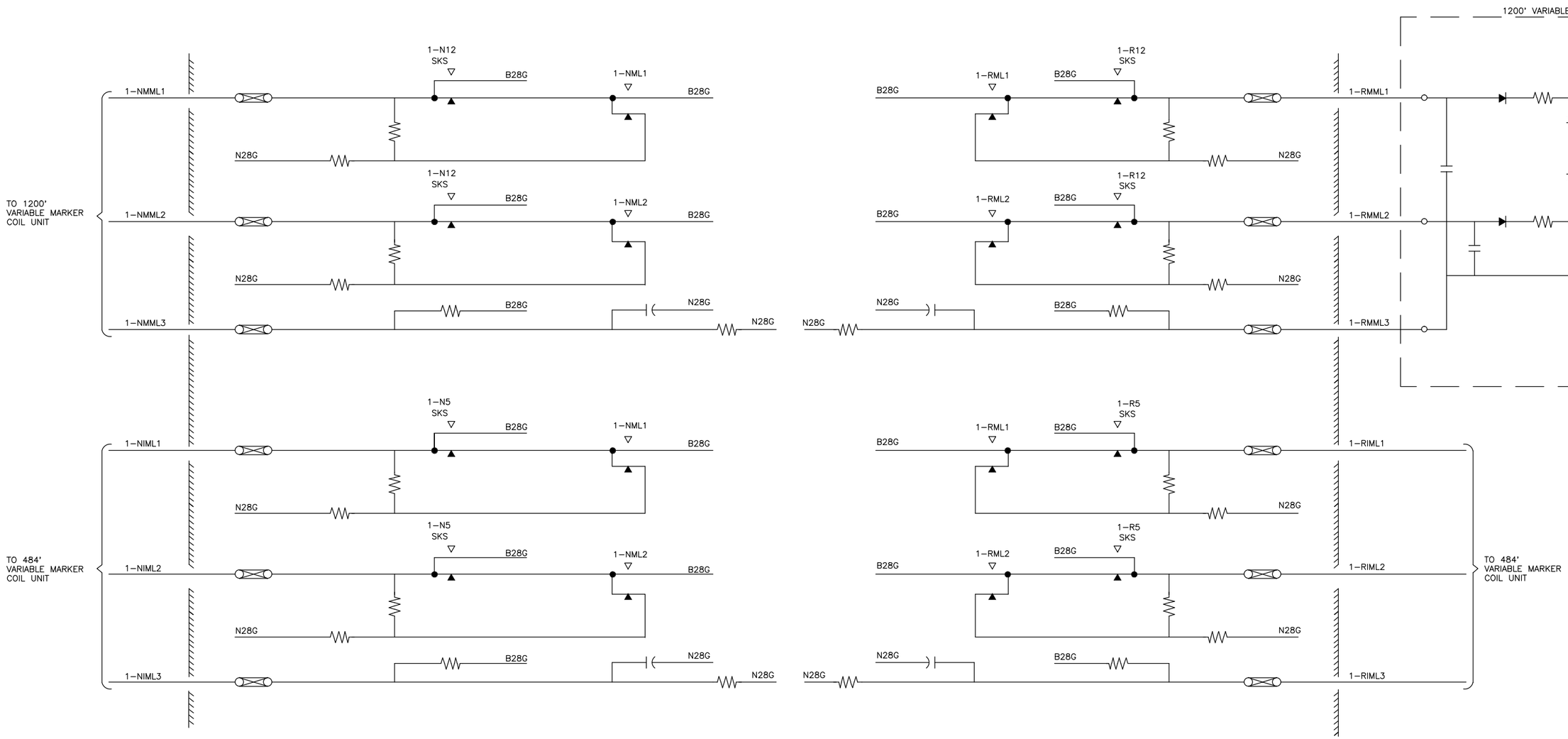

This Drawing Reflects a WMATA standard design approach. Project specific drawings must be developed by the Contractor which reflect this Design Philosophy

DESIGNED	ACC	11/04/16 DATE
DRAWN	DMR	11/04/16 DATE
CHECKED		DATE
APPROVED		DATE

REFERENCE DRAWINGS

NUMBER	DESCRIPTION

REVISIONS

DATE	BY	DESCRIPTION
08/2001	SYSP	REVISED AND ISSUED BY THE AUTHORITY
11/03/16	MM	REVISED FOR FQ15192

WASHINGTON METROPOLITAN TRANSIT AUTHORITY

DEPARTMENT OF TRANSIT INFRASTRUCTURE AND ENGINEERING SERVICES
OFFICE OF THE CHIEF ENGINEER, INFRASTRUCTURE

SUBMITTED DATE

APPROVED CHIEF ENGINEER DATE

TYPICAL PROGRAM STOP MARKER CONTROL CIRCUITS

SCALE

DRAWING NO. ST-ATC-CKT-004

SHEET NO.

NOTES:

1. CIRCUITS SHOWN FOR TRACK 1. EQUIVALENT CIRCUITS REQUIRED FOR TRACK 2.
2. "HOLD" SWITCH SHALL NOT BE PROVIDED, BUT CONTRACTOR SHALL PROVIDE EXTERNAL WIRING FOR POSSIBLE FUTURE SWITCH.
3. DWELL TIMER (TE) ENERGIZES AFTER SET TIME HAS RUN.

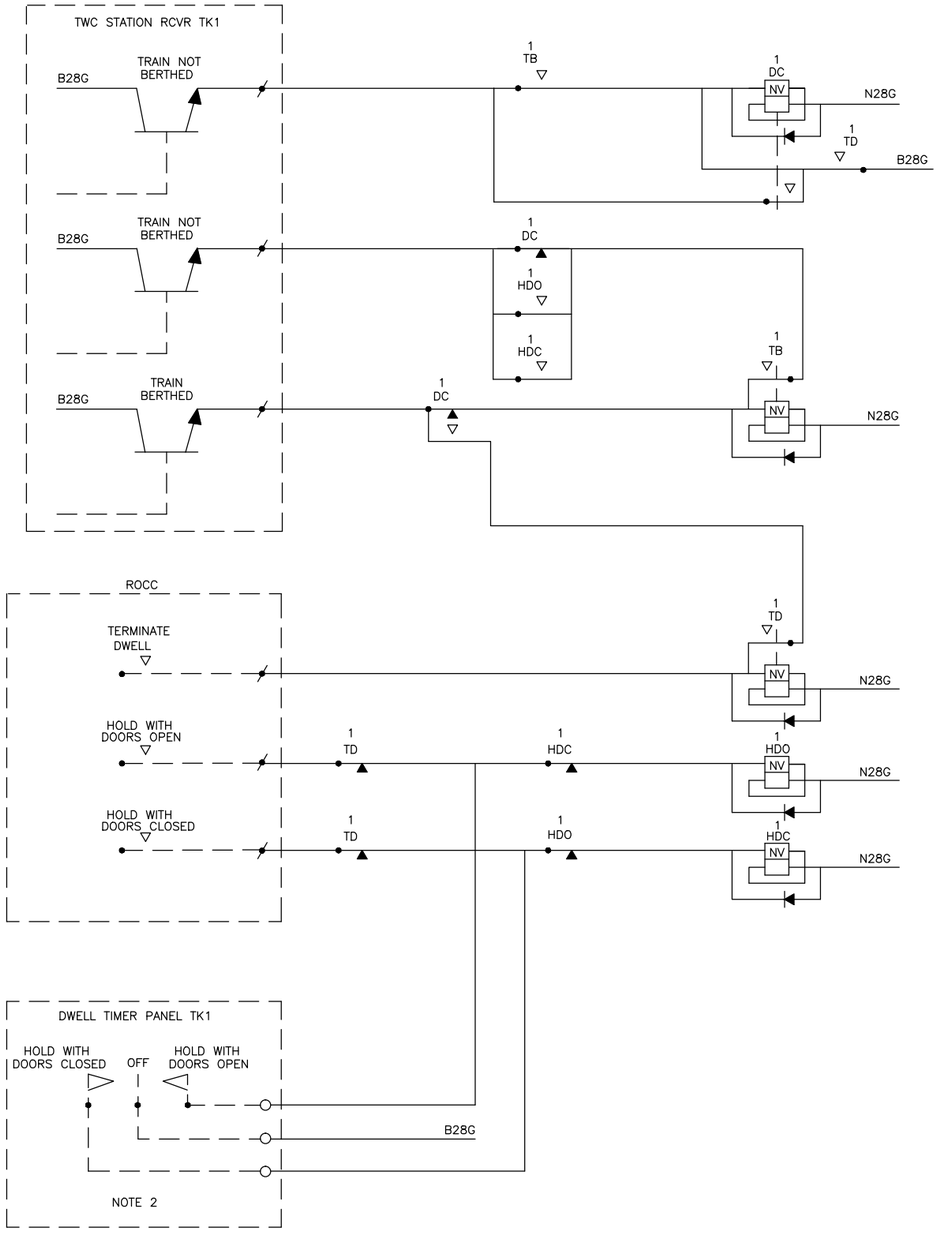

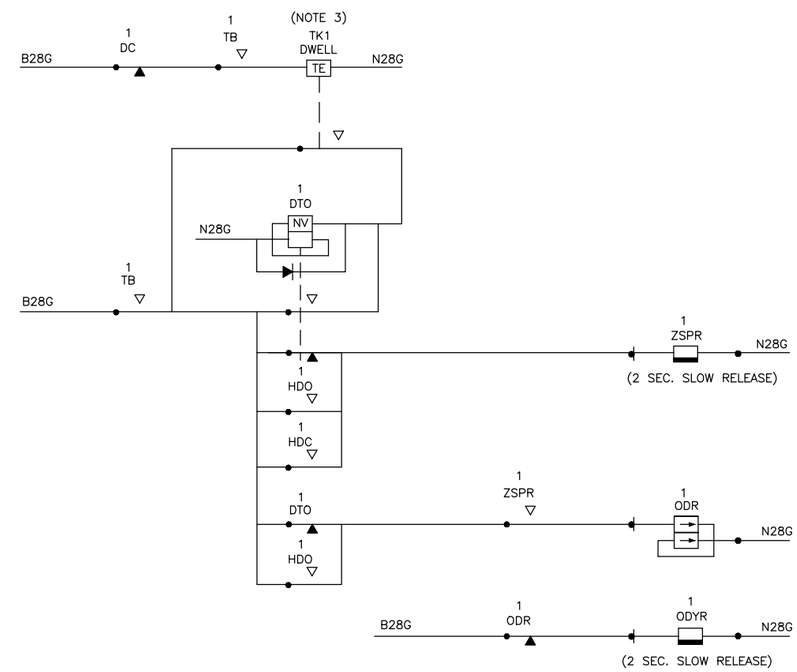

This Drawing Reflects a WMATA standard design approach. Project specific drawings must be developed by the Contractor which reflect this Design Philosophy

DESIGNED	ACC	11/04/16 DATE
DRAWN	DMR	11/04/16 DATE
CHECKED		DATE
APPROVED		DATE

REFERENCE DRAWINGS

NUMBER	DESCRIPTION

REVISIONS

DATE	BY	DESCRIPTION
08/2001	SYSP	REVISED AND ISSUED BY THE AUTHORITY
11/03/16	MM	REVISED FOR FQ15192

WASHINGTON METROPOLITAN TRANSIT AUTHORITY

DEPARTMENT OF TRANSIT INFRASTRUCTURE AND ENGINEERING SERVICES
OFFICE OF THE CHIEF ENGINEER, INFRASTRUCTURE

SUBMITTED DATE

APPROVED CHIEF ENGINEER DATE

TYPICAL DOOR AND DWELL CONTROL CIRCUITS

SCALE

DRAWING NO. ST-ATC-CKT-005

SHEET NO.

NOTES:

1. THE CONTRACTOR SHALL DETERMINE PERFORMANCE LEVEL SPEEDS FOR EACH LOCATION IN THE SPECIFIED MANNER AS PART OF HIS DESIGN RESPONSIBILITY.
2. PROGRAMMING PLUG SHALL BE CONSTRUCTED TO MAKE IT EASILY ACCESSIBLE TO CHANGE SPEEDS IF REQUIRED. THE ASSIGNMENT OF THE PINS IS THE CONTRACTOR'S RESPONSIBILITY.
3. THE CONTRACTOR SHALL DETERMINED WHICH TCR(S) THE FLY–BY TRANSMITTER EQUIPMENT IS TO BE LOCATED IN AS PART OF HIS BLOCK DESIGN RESPONSIBILITY.

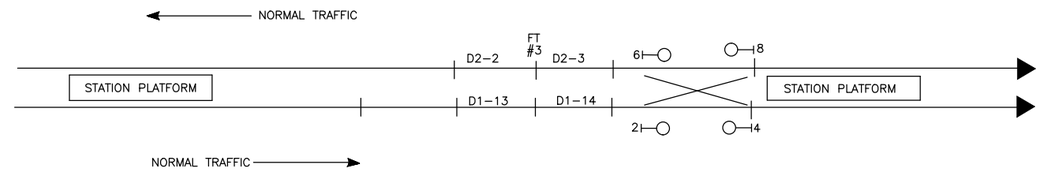

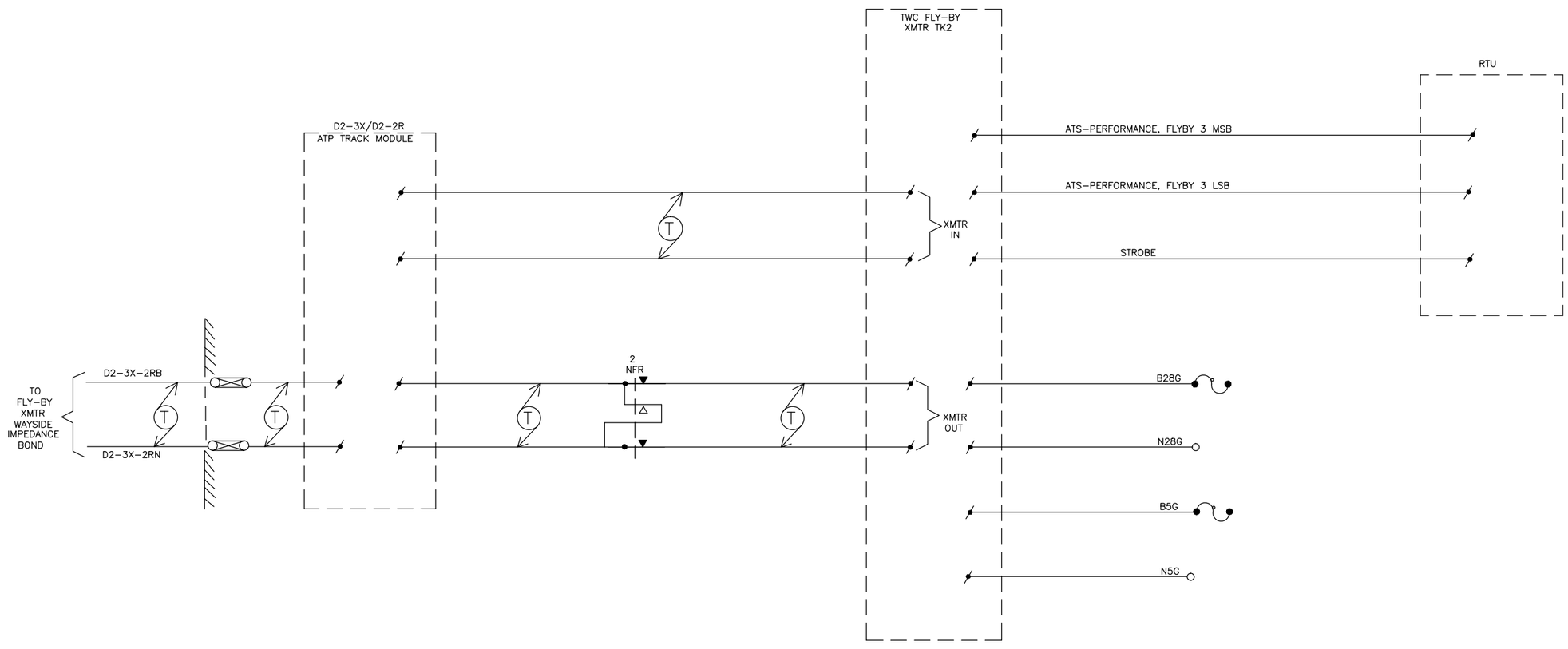

NOTE 1

ATS – PERFORMANCE (RTU OUTPUT)			
LSB	MSB	PERFORMANCE LEVEL	SPEED (MPH)
0	0	MAXIMUM	79
1	0	NORMAL	49
0	1	REDUCED	39
1	1	RETARDED	24

NOTE 2

ATS– PERFORMANCE	PROGRAMMING PLUG							
PERFORMANCE LEVEL	SPEED (MPH)	PIN	TO	PIN	BINARY OUTPUT 1	2	4	8
	79	X	X	X	0	0	0	0
	79	X	X	X	1	0	0	0
	14				0	1	0	0
	19				1	1	0	0
RETARDED	24				0	0	1	0
	29				1	0	1	0
	34				0	1	1	0
REDUCED	39				1	1	1	0
	44				0	0	0	1
NORMAL	49				1	0	0	1
	54				0	1	0	1
	59				1	1	0	1
	64				0	0	1	1
	69				1	0	1	1
	74				0	1	1	1
MAXIMUM	79	X	X	X	1	1	1	1

This Drawing Reflects a WMATA standard design approach. Project specific drawings must be developed by the Contractor which reflect this Design Philosophy

DESIGNED	GAH	2–00 DATE
DRAWN	JMR	2–00 DATE
CHECKED		DATE
APPROVED		DATE
UPDATED		DATE

REFERENCE DRAWINGS

NUMBER	DESCRIPTION

REVISIONS

DATE	BY	DESCRIPTION
08/2001	SYSP	Revised and issued by the Authority

WASHINGTON METROPOLITAN AREA TRANSIT AUTHORITY

DEPARTMENT OF TRANSIT SYSTEM DEVELOPMENT
OFFICE OF SYSTEMS

SUBMITTED _____ DATE

APPROVED _____ DIRECTOR May 3, 2001 DATE

TYPICAL TWC FLYBY TRANSMITTER CIRCUITS

SCALE NONE

DRAWING NO. ST–ATC–CKT–009

NOTES:
1. EQUIVALENT CIRCUIT REQUIRED FOR TRACK 2.
2. FOR TIMING AND CONTROL PULSES REQUIRED BY THE RECEIVER, WHICH ARE DEVELOPED WITHIN THE TRANSMITTER.
3. "TRAIN READY" REQUIRED AT TERMINALS WITH INTERLOCKING ON REVENUE SERVICE END OF STATION PLATFORM.
4. NCD IS REQUIRED WHEN TRAIN IS ENTERING REVENUE SERVICE ON THE SPECIFIED TRACK IN THE NORMAL DIRECTION AND THE RCD IS REQUIRED WHEN IT IS ENTERING IN THE REVERSE DIRECTION.

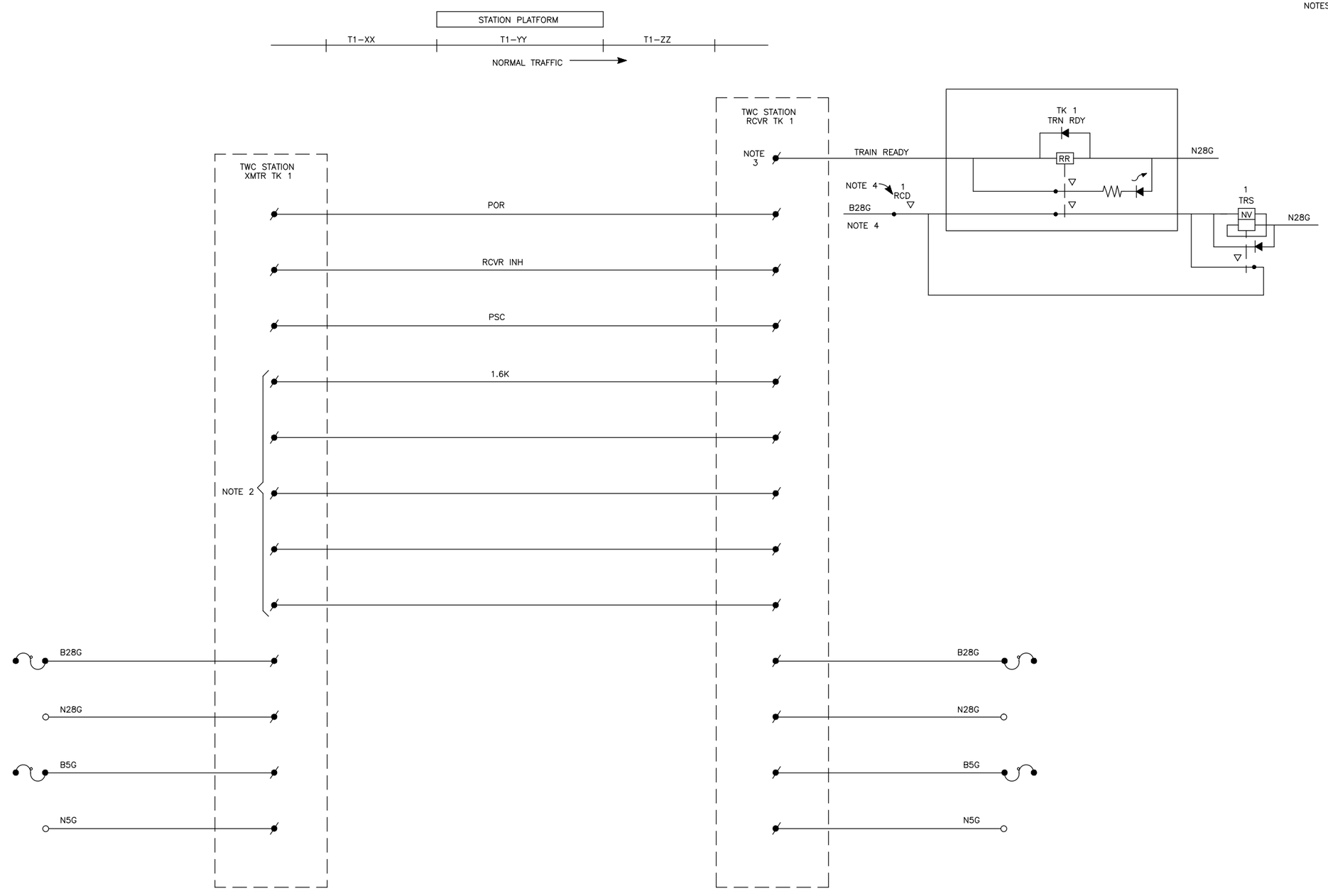

This Drawing Reflects a WMATA standard design approach. Project specific drawings must be developed by the Contractor which reflect this Design Philosophy

DESIGNED	GAH	2–00 DATE
DRAWN	JMR	2–00 DATE
CHECKED		DATE
APPROVED		DATE
UPDATED		DATE

REFERENCE DRAWINGS

NUMBER	DESCRIPTION

REVISIONS

DATE	BY	DESCRIPTION
08/2001	SYSP	Revised and issued by the Authority

WASHINGTON METROPOLITAN AREA TRANSIT AUTHORITY

DEPARTMENT OF TRANSIT SYSTEM DEVELOPMENT
OFFICE OF SYSTEMS

SUBMITTED _____ DATE

APPROVED _____ DIRECTOR May 3, 2001 DATE

TYPICAL TWC XMTR–RCVR INTERFACE CIRCUITS

SCALE NONE

DRAWING NO. ST–ATC–CKT–010

NOTES:
1. EQUIVALENT CIRCUIT REQUIRED FOR TRACK 2
2. ALL DUAL–LEAD WIRING SHALL BE TWISTED PAIR.

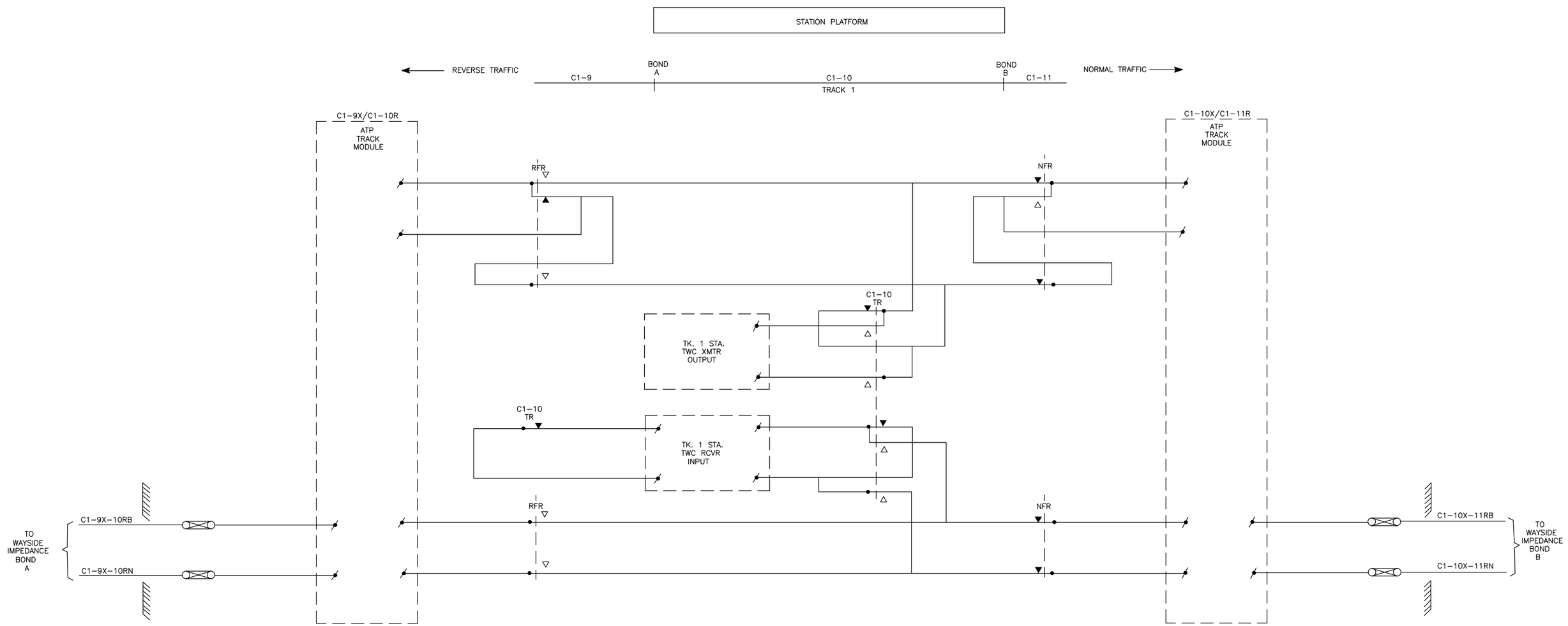

This Drawing Reflects a WMATA standard design approach. Project specific drawings must be developed by the Contractor which reflect this Design Philosophy

DESIGNED	GAH	2–00 DATE
DRAWN	JMR	2–00 DATE
CHECKED		DATE
APPROVED		DATE
UPDATED		DATE

REFERENCE DRAWINGS

NUMBER	DESCRIPTION

REVISIONS

DATE	BY	DESCRIPTION
08/2001	SYSP	Revised and issued by the Authority

WASHINGTON METROPOLITAN AREA TRANSIT AUTHORITY

DEPARTMENT OF TRANSIT SYSTEM DEVELOPMENT
OFFICE OF SYSTEMS

SUBMITTED DATE

APPROVED DIRECTOR May 3, 2001 DATE

TYPICAL TWC SELECTION CIRCUITS

SCALE NONE

DRAWING NO. ST–ATC–CKT–011

NOTE:

1. ALL ATP MODULES WITHIN TRAIN CONTROL ROOM SHALL BE INDICATED.
2. SEE SITE-SPECIFIC DRAWINGS AND SECTION 16918 FOR NON-TYPICAL TEMPORARY SPEED RESTRICTION ZONE ARRANGEMENTS.

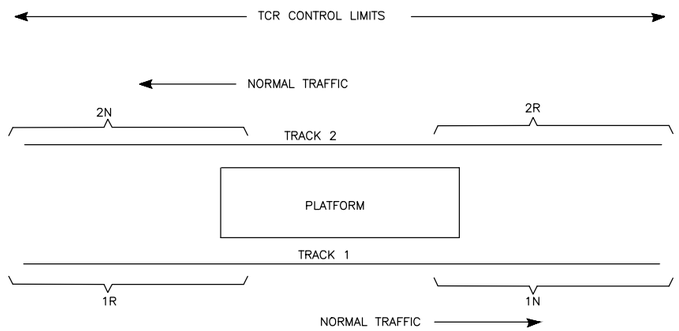

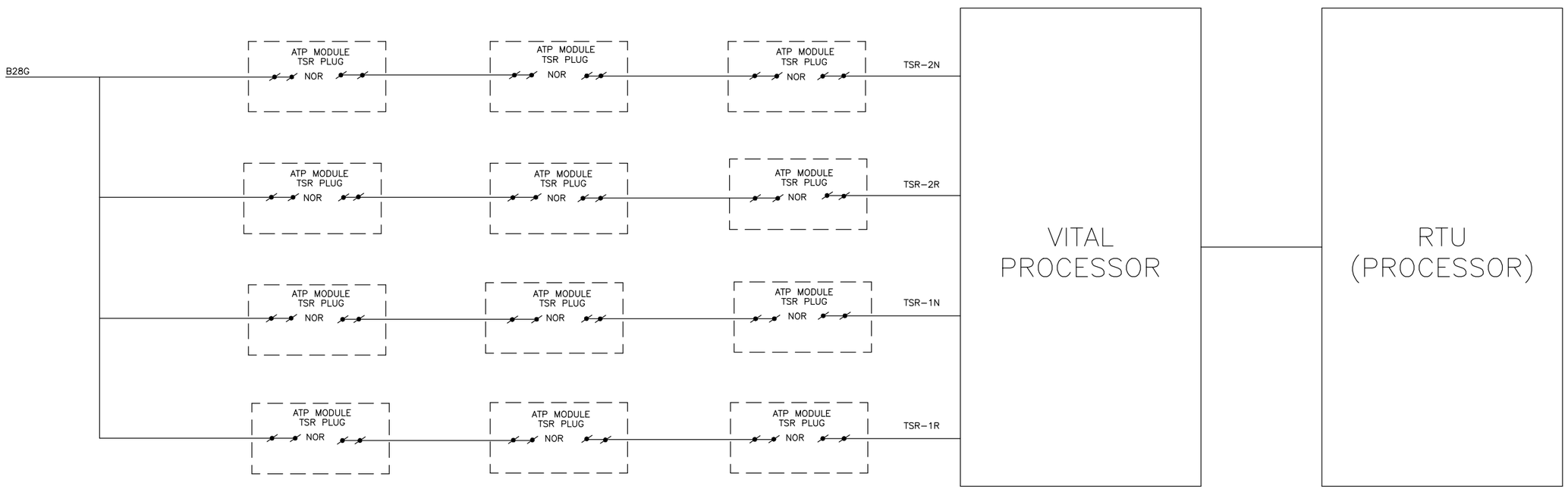

This Drawing Reflects a WMATA standard design approach. Project specific drawings must be developed by the Contractor which reflect this Design Philosophy

DESIGNED	GAH	02/00 DATE
DRAWN	JMR	02/00 DATE
CHECKED		DATE
APPROVED		DATE

REFERENCE DRAWINGS

NUMBER	DESCRIPTION

REVISIONS

DATE	BY	DESCRIPTION
08/2001	SYSP	REVISED AND ISSUED BY THE AUTHORITY
02/13/17	MM	REVISED FOR FQ15192 (REMOVED REED RELAYS)

WASHINGTON METROPOLITAN TRANSIT AUTHORITY

DEPARTMENT OF TRANSIT INFRASTRUCTURE AND ENGINEERING SERVICES
OFFICE OF THE CHIEF ENGINEER, INFRASTRUCTURE

SUBMITTED _____ DATE

APPROVED _____ CHIEF ENGINEER DATE

TYPICAL TEMPORARY SPEED RESTRICTION ALARM CIRCUITS

SCALE	DRAWING NO.	SHEET NO.
NONE	ST-ATC-CKT-013	

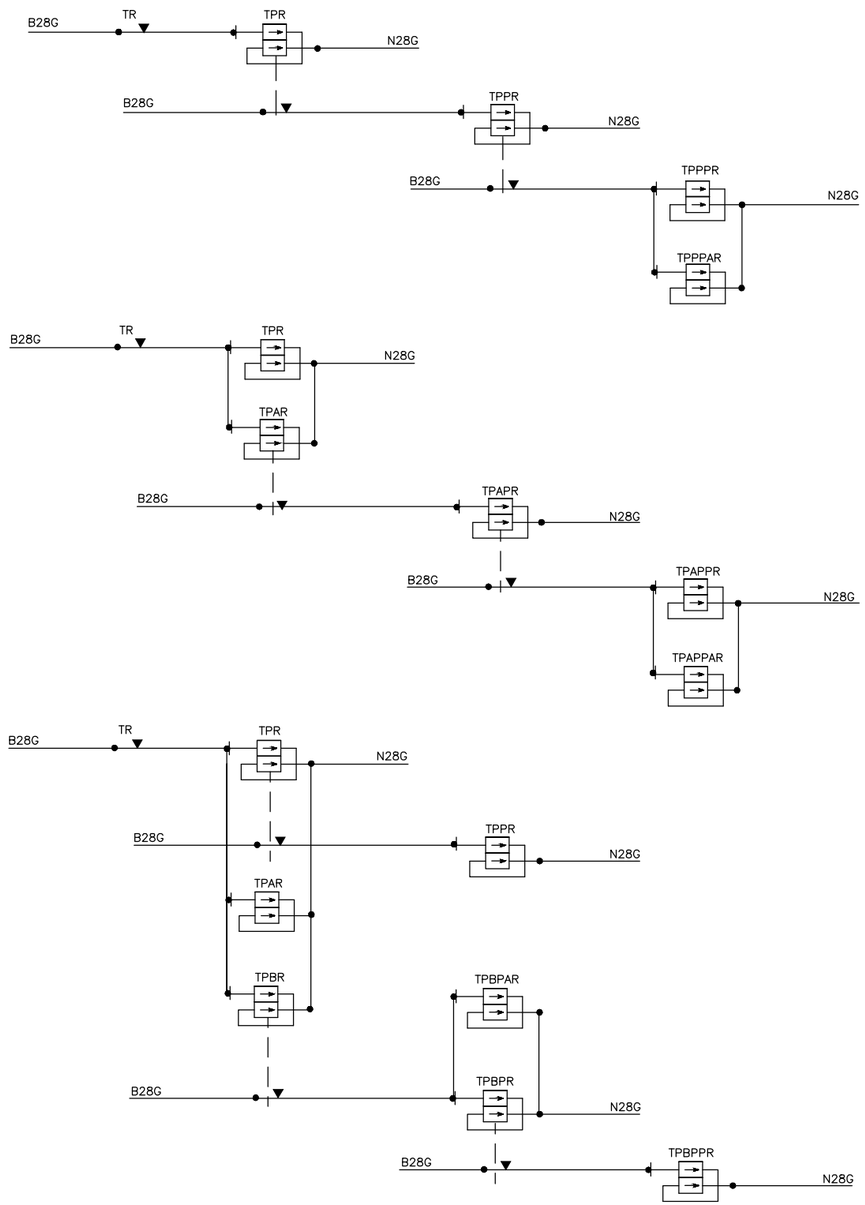

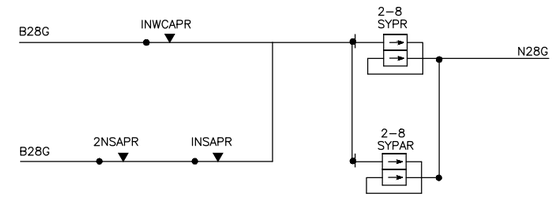

NOTES:

1. CIRCUITS ON THIS DRAWING SHOWN ONLY TO REPRESENT REPEATER WIRING AND NOMENCLATURE RULES.
2. POSITIVE AND NEGATIVE ENERGY SOURCES FOR MULTIPLE VITAL RELAYS SHALL BE CONNECTED ONLY TO THE POSITIVE AND NEGATIVE COIL TERMINALS OF THE FIRST (CASCADE) REPEATER.
3. NO MORE THAN THREE RELAYS SHALL BE CONNECTED IN MULTIPLE.

REPEATER RELAY NOMENCLATURE

LETTER "P"	INDICATES FIRST CASCADE (SERIES) REPEATER.
LETTERS "PP"	INDICATE SECOND CASCADE REPEATER, THAT IS, A CASCADE REPEATER OF ANOTHER REPEATER.
LETTERS "PPP"	INDICATE THIRD CASCADE REPEATER.
LETTERS "PA"	INDICATE FIRST MULTIPLE REPEATER OF A CASCADE REPEATER
LETTERS "PB"	INDICATE SECOND MULTIPLE REPEATER OF A CASCADE REPEATER.
LETTERS "YP"	INDICATE A "COLLECTOR" CASCADE REPEATER, THAT IS, A SERIES REPEATER OF MORE THAN ONE CONTACT CLOSURE AND TYPE OF RELAY.

This Drawing Reflects a WMATA standard design approach. Project specific drawings must be developed by the Contractor which reflect this Design Philosophy

DESIGNED	GAH	2–00 DATE
DRAWN	JMR	2–00 DATE
CHECKED		DATE
APPROVED		DATE
UPDATED		DATE

REFERENCE DRAWINGS

NUMBER	DESCRIPTION

REVISIONS

DATE	BY	DESCRIPTION
08/2001	SYSP	Revised and issued by the Authority

WASHINGTON METROPOLITAN AREA TRANSIT AUTHORITY

DEPARTMENT OF TRANSIT SYSTEM DEVELOPMENT
OFFICE OF SYSTEMS

SUBMITTED _____ DATE

APPROVED _____ DIRECTOR May 3, 2001 DATE

TYPICAL REPEATER RELAY
WIRING AND NOMENCLATURE

SCALE NONE

DRAWING NO. ST–ATC–CKT–014

NOTES:

1. SEE SECTION 16924.1.02.E.5, TRAIN APPROACH WARNING LIGHT CONTROL.
2. THE CONTRACTORS SHALL PROVIDE CONTACTS FROM SUFFICIENT APPROACH TRACK RELAYS TO ENSURE 60 SECONDS OF APPROACH TIME TO THE PLATFORM TRACK AT THE APPLICABLE AVERAGE OUTBOUND APPROACH SPEED. (TRACK NOMENCLATURE SHOWN FOR ILLUSTRATIVE PURPOSES ONLY).
3. THE CONTRACTOR SHALL PROVIDE THE "TRAIN APPROACH WARNING LIGHT" (TAWL) WIRING FROM THE TCR TO THE DTS BOX (BY OTHERS) IN THE APPROPRIATE STATION AC SERVICE ROOM AS SHOWN.
4. THE CONTRACTOR SHALL USE THE APPROPRIATE TRAFFIC OR DIRECTIONAL STICK CIRCUIT CONTACT FOR THE STATION PLATFORM TRACK.

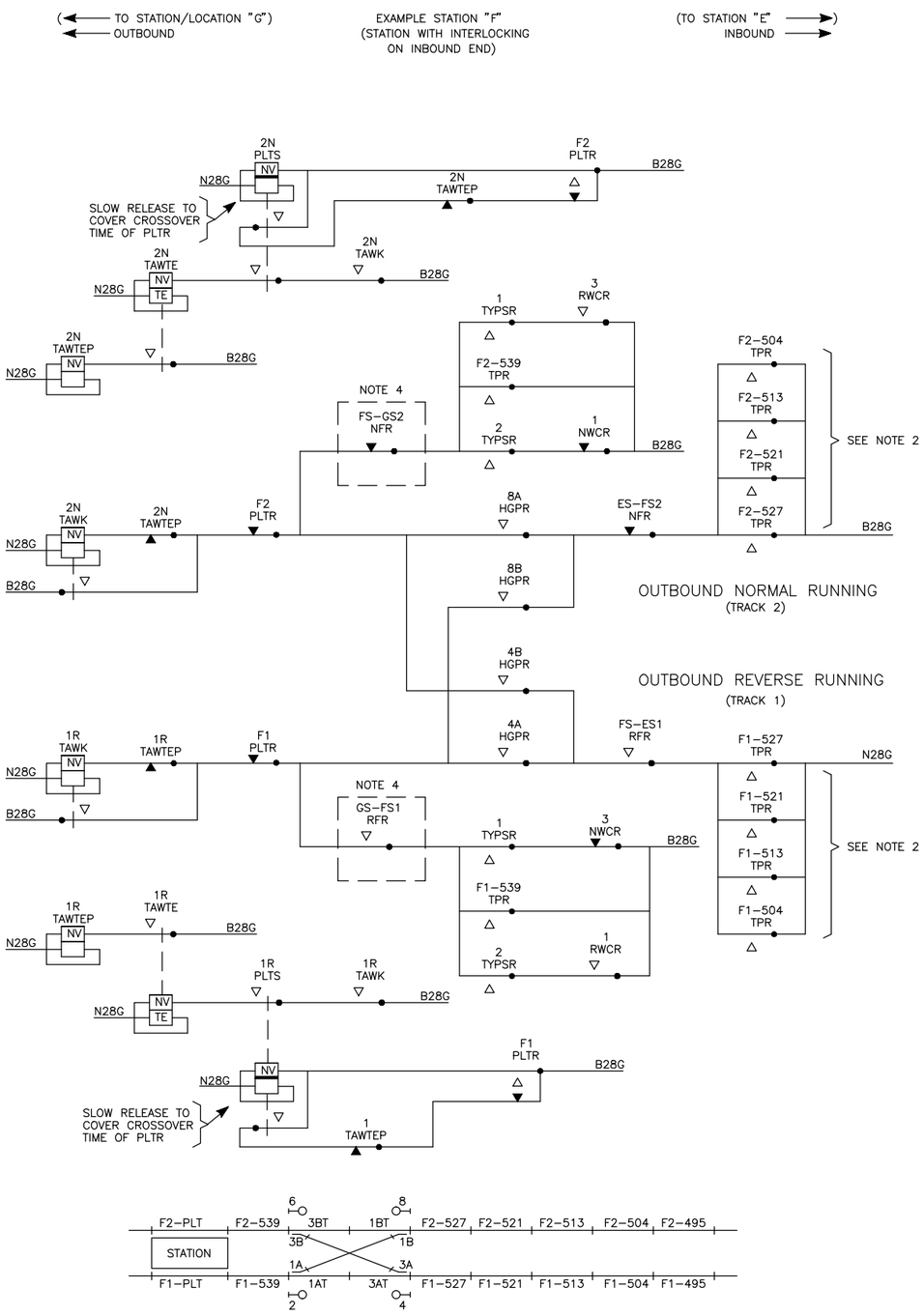

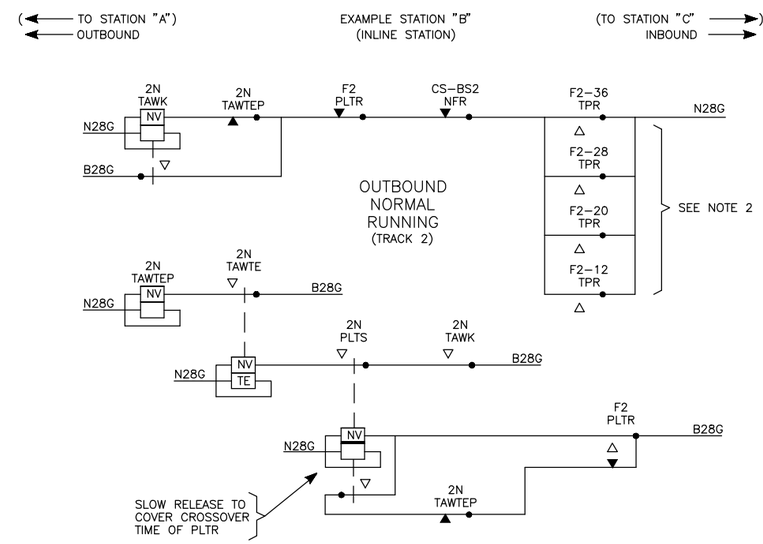

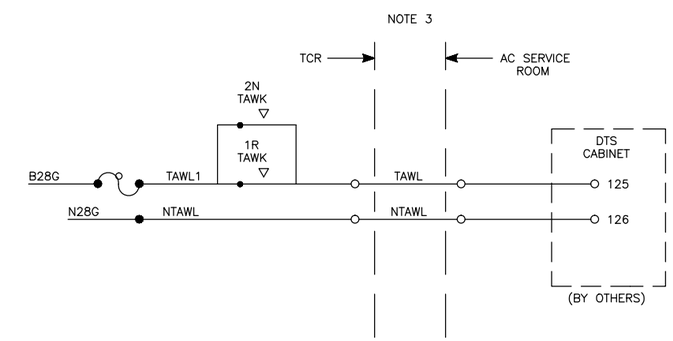

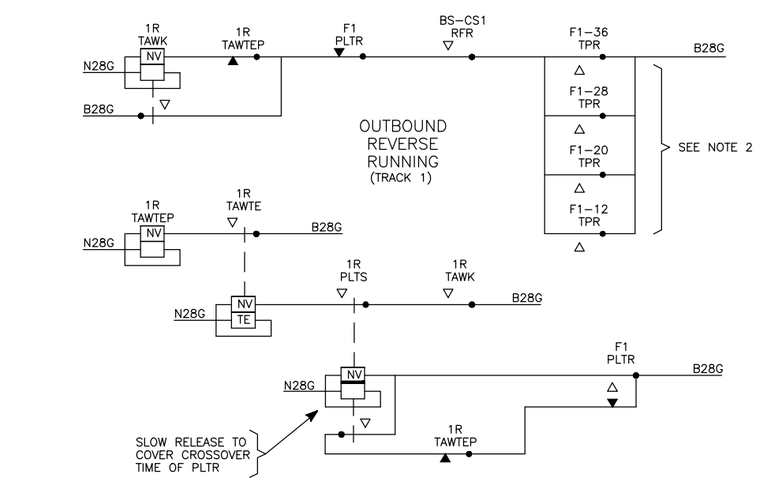

This Drawing Reflects a WMATA standard design approach. Project specific drawings must be developed by the Contractor which reflect this Design Philosophy

DESIGNED	GAH	2-00 DATE
DRAWN	JMR	2-00 DATE
CHECKED		DATE
APPROVED		DATE
UPDATED		DATE

REFERENCE DRAWINGS

NUMBER	DESCRIPTION

REVISIONS

DATE	BY	DESCRIPTION
08/2001	SYSP	Revised and issued by the Authority

WASHINGTON METROPOLITAN AREA TRANSIT AUTHORITY

DEPARTMENT OF TRANSIT SYSTEM DEVELOPMENT
OFFICE OF SYSTEMS

SUBMITTED _____ DATE

APPROVED _____ DIRECTOR May 3, 2001 DATE

TYPICAL OUTBOUND TRAIN APPROACH WARNING CIRCUITS/LOGIC

SCALE NONE

DRAWING NO. ST-ATC-CKT-015

WMATA

CLEVELAND PARK

A05

EXAMPLE LOCATION

This Drawing Reflects a WMATA standard design approach. Project specific drawings must be developed by the Contractor which reflect this Design Philosophy

DESIGNED	GAH	6-00 DATE
DRAWN	JMR	6-00 DATE
CHECKED		DATE
APPROVED		DATE
UPDATED		DATE

REFERENCE DRAWINGS

NUMBER	DESCRIPTION

REVISIONS

DATE	BY	DESCRIPTION
08/2001	SYSP	Revised and issued by the Authority

WASHINGTON METROPOLITAN AREA TRANSIT AUTHORITY

DEPARTMENT OF TRANSIT SYSTEM DEVELOPMENT
OFFICE OF SYSTEMS

SUBMITTED _____ DATE

APPROVED _____ DIRECTOR May 3, 2001 DATE

COVER SHEET

SCALE NONE

DRAWING NO. ST-ATC-CKT-016

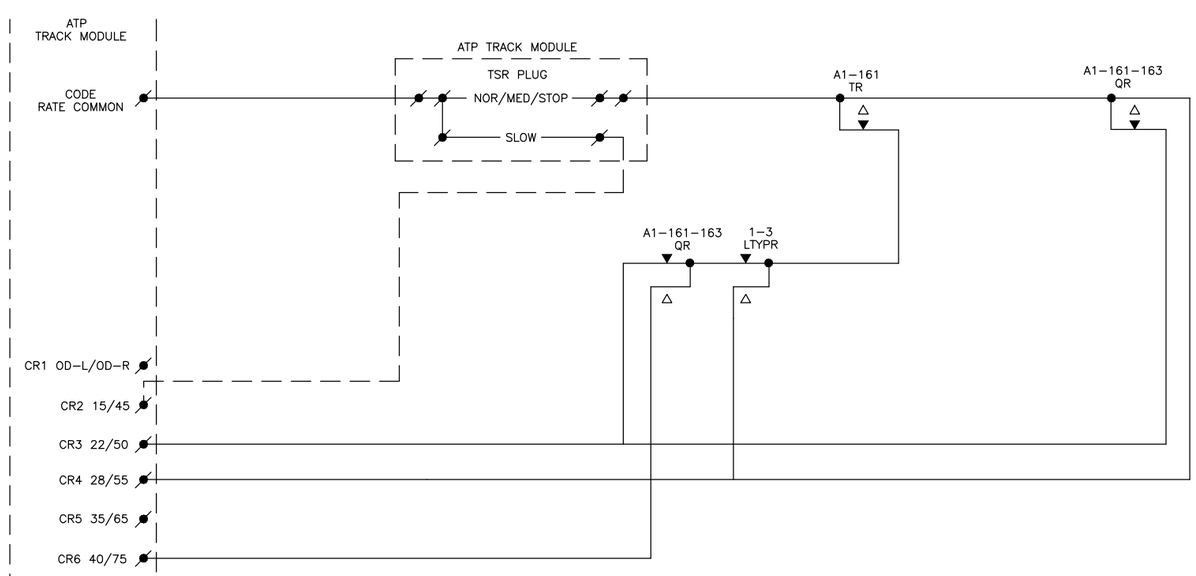

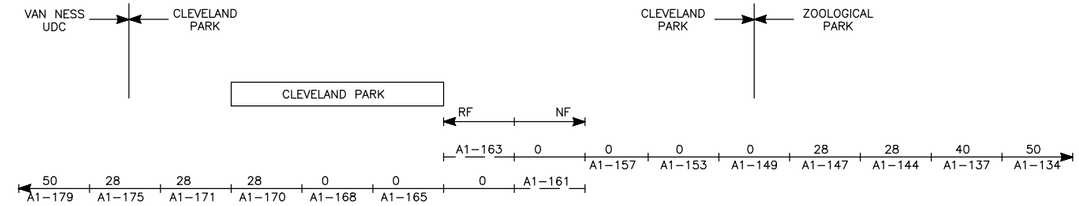

TSR PLUG

A1-163		A1-161	
NORMAL	50MPH	NORMAL	50MPH
MEDIUM	40MPH	MEDIUM	28MPH
SLOW	15MPH	SLOW	15MPH
STOP	0MPH	STOP	0MPH

CONTACT ASSIGNMENT RULES:

1. CASCADE REPEATERS – WHEN USING CASCADE REPEATER RELAYS IN THIS CIRCUIT, THE RELAYS USED FOR FREQUENCY SELECTION SHALL BE CASCADE REPEATERS OF THE RELAYS USED IN CODE RATE SELECTION.
2. MULTIPLE REPEATERS – WHEN USING MULTIPLE REPEATER RELAYS IN THIS CIRCUIT, THE SAME RELAYS SHALL BE USED FOR BOTH CODE RATE AND FREQUENCY SELECTION.
3. COMBINATION REPEATERS – WHEN USING COMBINATION REPEATERS IN THIS CIRCUIT, THE COMBINATION RELAYS USED FOR FREQUENCY SELECTION SHALL BE REPEATERS OF THE RELAYS USED FOR CODE RATE SELECTION.

SPEED LIMIT CHART

CR	F9	F10	HZ
1	OD-L	OD-R	3.0
2	15	45	4.5
3	22	50	6.83
4	28	55	10.1
5	35	65	15.3
6	40	75	21.5

NOTE: "QR" RELAY AND ASSOCIATED 28-VOLT ENERGY MUST BE WIRED EXACTLY AS SHOWN.

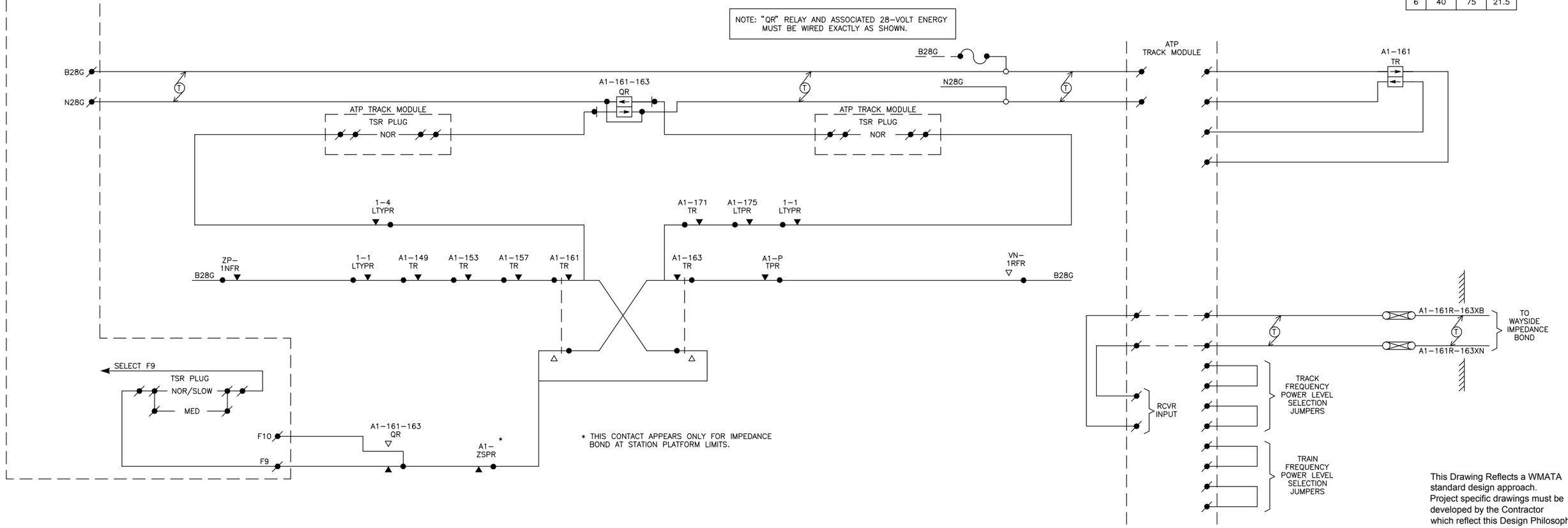

* THIS CONTACT APPEARS ONLY FOR IMPEDANCE BOND AT STATION PLATFORM LIMITS.

This Drawing Reflects a WMATA standard design approach. Project specific drawings must be developed by the Contractor which reflect this Design Philosophy

DESIGNED	GAH	6-00 DATE
DRAWN	JMR	6-00 DATE
CHECKED		DATE
APPROVED		DATE
UPDATED		DATE

REFERENCE DRAWINGS

NUMBER	DESCRIPTION

REVISIONS

DATE	BY	DESCRIPTION
08/2001	SYSP	Revised and issued by the Authority

WASHINGTON METROPOLITAN AREA TRANSIT AUTHORITY

DEPARTMENT OF TRANSIT SYSTEM DEVELOPMENT
OFFICE OF SYSTEMS

SUBMITTED DATE

APPROVED DIRECTOR May 3, 2001 DATE

SPEED LIMIT COMAND CIRCUIT
A1-161-163 QR

SCALE NONE

DRAWING NO. ST-ATC-CKT-024

WMATA

TYPICAL INTERLOCKING CIRCUITS

BOOK OF PLANS

DESIGNED	GAH	2-00 DATE
DRAWN	JMR	2-00 DATE
CHECKED		DATE
APPROVED		DATE
UPDATED		DATE

REFERENCE DRAWINGS

NUMBER	DESCRIPTION

REVISIONS

DATE	BY	DESCRIPTION
08/2001	SYSP	Revised and issued by the Authority

WASHINGTON METROPOLITAN AREA TRANSIT AUTHORITY

DEPARTMENT OF TRANSIT SYSTEM DEVELOPMENT
OFFICE OF SYSTEMS

SUBMITTED _____ DATE

APPROVED _____ DIRECTOR May 3, 2001 DATE

TYPICAL INTERLOCKING CIRCUITS

SCALE NONE

DRAWING NO. ST-ATC-IC-000

NOTE: 1. DWG. NO. CROSS REFERENCE SHALL BE SHOWN ON CONTRACTOR'S RTU CONTROL CIRCUIT DRAWINGS.

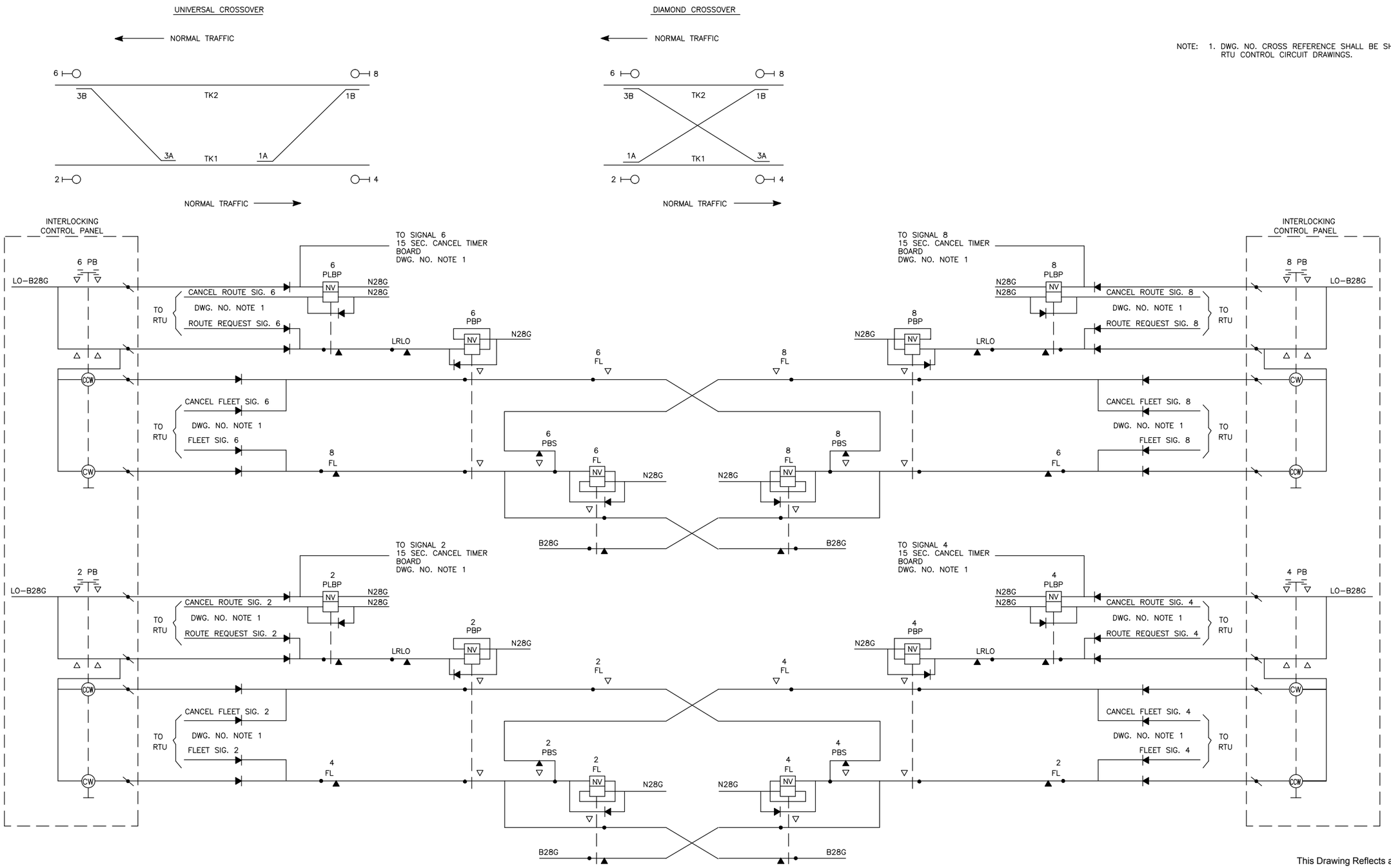

This Drawing Reflects a WMATA standard design approach. Project specific drawings must be developed by the Contractor which reflect this Design Philosophy

DESIGNED	GAH	2–00 DATE
DRAWN	JMR	2–00 DATE
CHECKED		DATE
APPROVED		DATE
UPDATED		DATE

REFERENCE DRAWINGS

NUMBER	DESCRIPTION

REVISIONS

DATE	BY	DESCRIPTION
08/2001	SYSP	Revised and issued by the Authority

WASHINGTON METROPOLITAN AREA TRANSIT AUTHORITY

DEPARTMENT OF TRANSIT SYSTEM DEVELOPMENT
OFFICE OF SYSTEMS

SUBMITTED DATE

APPROVED DIRECTOR May 3, 2001 DATE

TYPICAL PUSHBUTTON AND FLEETING CIRCUITS
SIGNALS 2, 4, 6 & 8

SCALE NONE

DRAWING NO. ST–ATC–IC–001

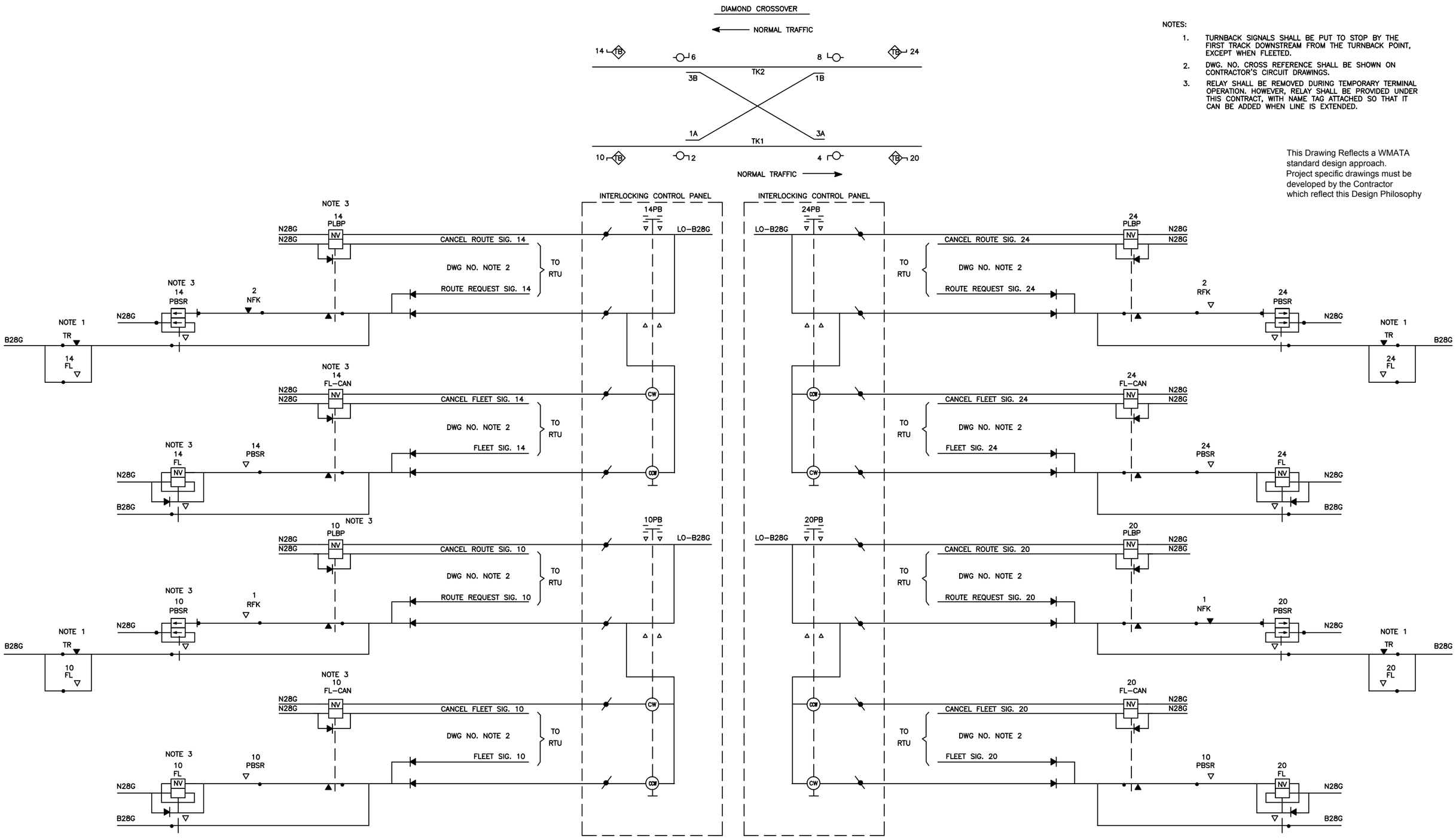

NOTES:

1. TURNBACK SIGNALS SHALL BE PUT TO STOP BY THE FIRST TRACK DOWNSTREAM FROM THE TURNBACK POINT, EXCEPT WHEN FLEETED.
2. DWG. NO. CROSS REFERENCE SHALL BE SHOWN ON CONTRACTOR'S CIRCUIT DRAWINGS.
3. RELAY SHALL BE REMOVED DURING TEMPORARY TERMINAL OPERATION. HOWEVER, RELAY SHALL BE PROVIDED UNDER THIS CONTRACT, WITH NAME TAG ATTACHED SO THAT IT CAN BE ADDED WHEN LINE IS EXTENDED.

This Drawing Reflects a WMATA standard design approach. Project specific drawings must be developed by the Contractor which reflect this Design Philosophy

DESIGNED	GAH	2–00 DATE
DRAWN	JMR	2–00 DATE
CHECKED		DATE
APPROVED		DATE
UPDATED		DATE

REFERENCE DRAWINGS

NUMBER	DESCRIPTION

REVISIONS

DATE	BY	DESCRIPTION
08/2001	SYSP	Revised and issued by the Authority

WASHINGTON METROPOLITAN AREA TRANSIT AUTHORITY

DEPARTMENT OF TRANSIT SYSTEM DEVELOPMENT
OFFICE OF SYSTEMS

SUBMITTED _____ DATE

APPROVED DIRECTOR May 3, 2001 DATE

TYPICAL TURNBACK PUSHBUTTON AND FLEETING CIRCUITS SIGNALS 10, 14, 20, & 24

SCALE: NONE

DRAWING NO. ST–ATC–IC–002

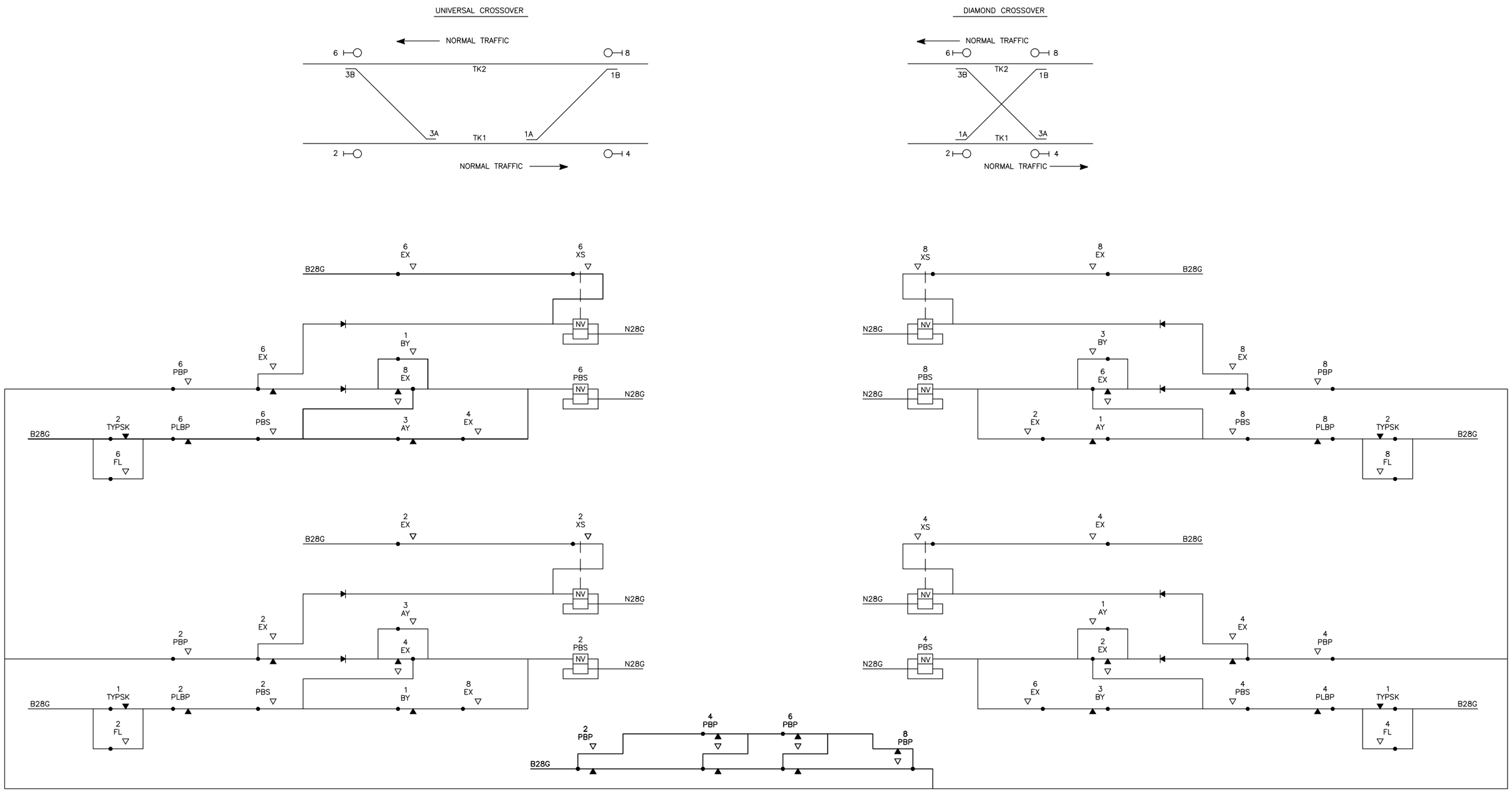

This Drawing Reflects a WMATA standard design approach. Project specific drawings must be developed by the Contractor which reflect this Design Philosophy

DESIGNED	GAH	2-00 DATE
DRAWN	JMR	2-00 DATE
CHECKED		DATE
APPROVED		DATE
UPDATED		DATE

REFERENCE DRAWINGS

NUMBER	DESCRIPTION

REVISIONS

DATE	BY	DESCRIPTION
08/2001	SYSP	Revised and issued by the Authority

WASHINGTON METROPOLITAN AREA TRANSIT AUTHORITY

DEPARTMENT OF TRANSIT SYSTEM DEVELOPMENT
OFFICE OF SYSTEMS

SUBMITTED _____ DATE

APPROVED _____ DIRECTOR — May 3, 2001 DATE

TYPICAL ROUTE STORAGE CIRCUITS

SCALE: NONE

DRAWING NO. ST-ATC-IC-008

This Drawing Reflects a WMATA standard design approach. Project specific drawings must be developed by the Contractor which reflect this Design Philosophy

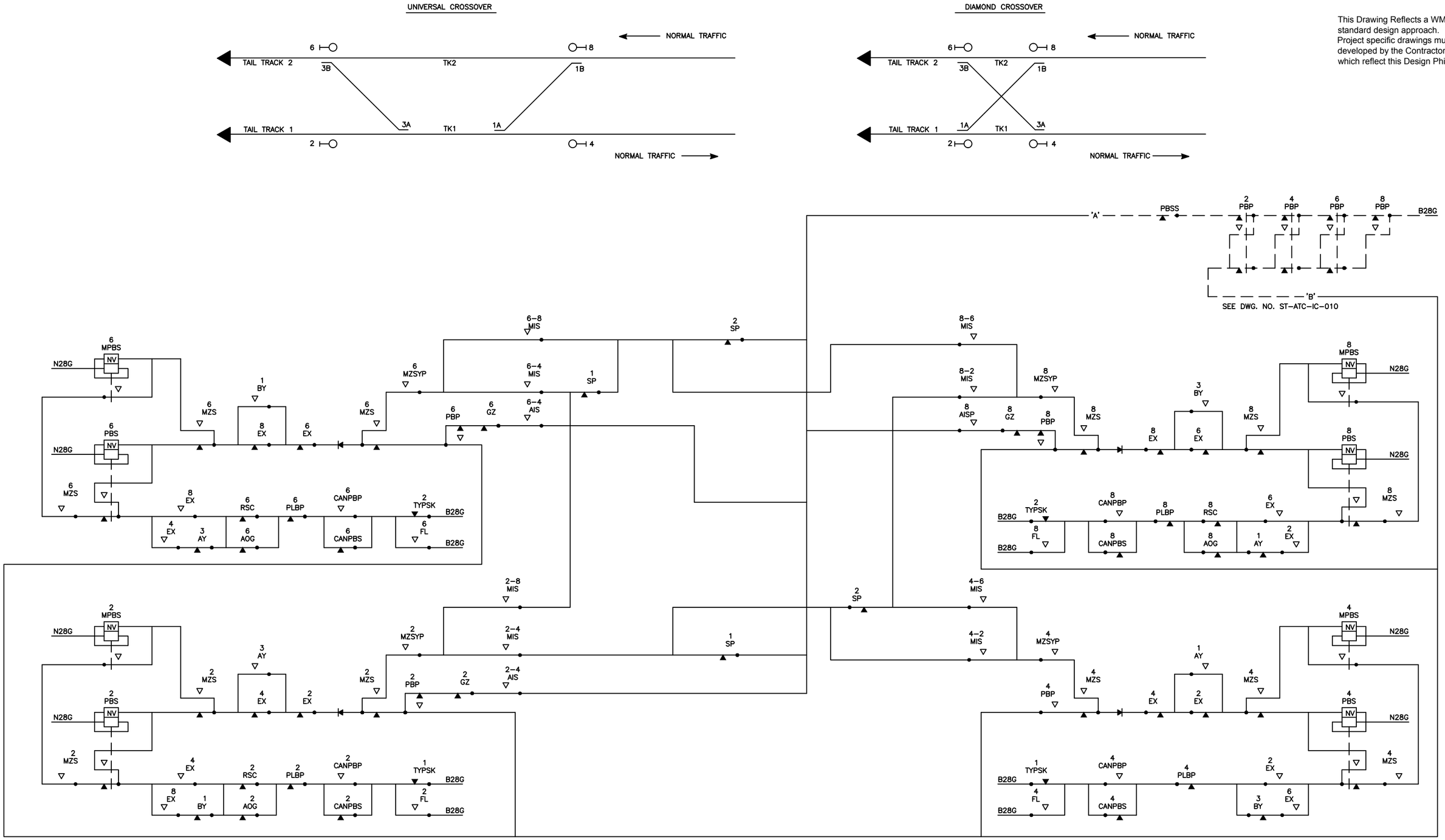

DESIGNED	GAH	2-00 DATE
DRAWN	JMR	2-00 DATE
CHECKED		DATE
APPROVED		DATE
UPDATED		DATE

REFERENCE DRAWINGS

NUMBER	DESCRIPTION

REVISIONS

DATE	BY	DESCRIPTION
3/30/17	SYSP	Revised and issued by the Authority

WASHINGTON METROPOLITAN AREA TRANSIT AUTHORITY

DEPARTMENT OF TRANSIT SYSTEM DEVELOPMENT
OFFICE OF SYSTEMS

SUBMITTED _____ DATE

APPROVED _____ DIRECTOR May 3, 2001 DATE

TYPICAL ROUTE STORAGE CIRCUITS
(SHEET 1 OF 2)

SCALE NONE

DRAWING NO. ST-ATC-IC-009

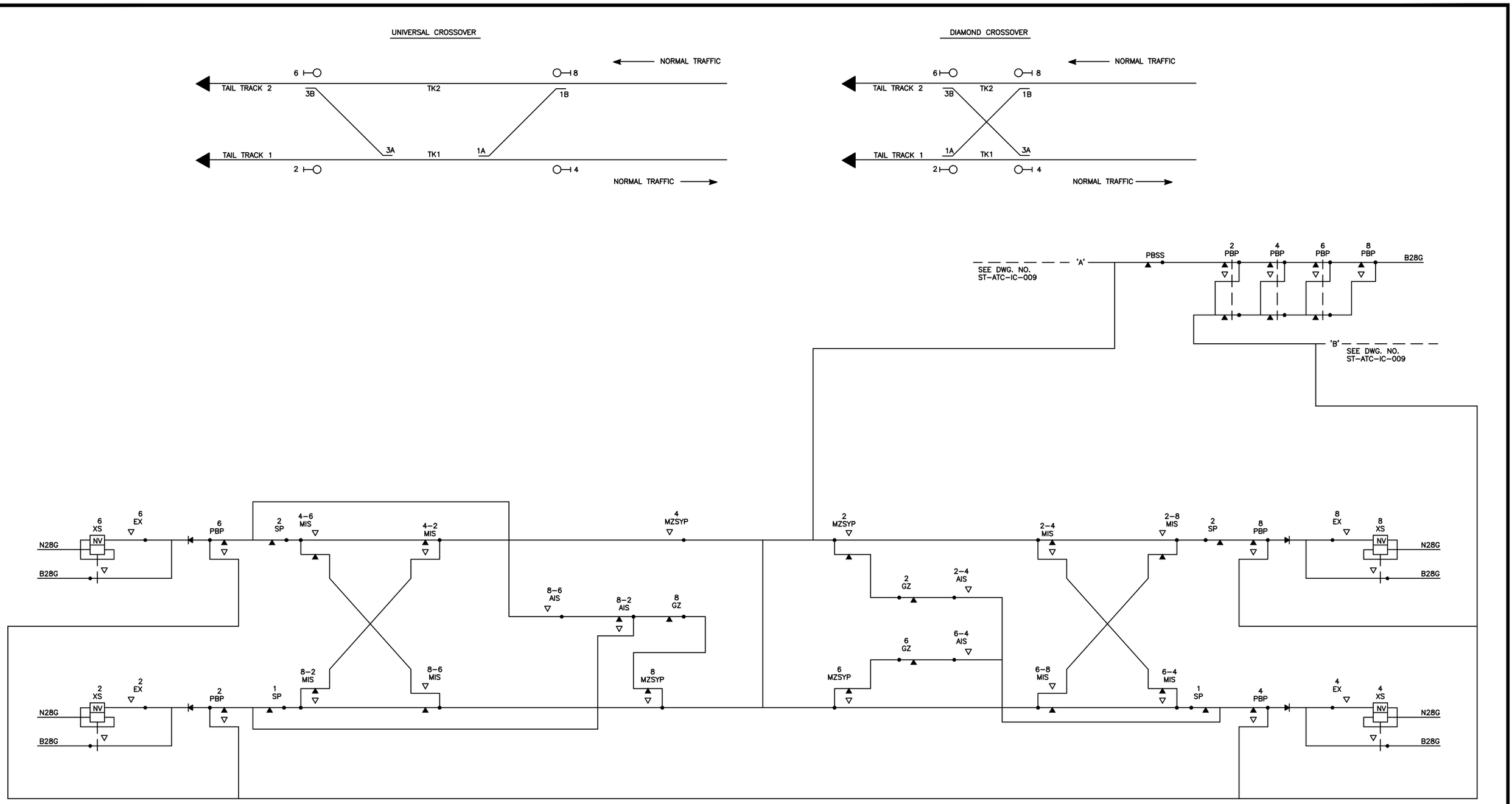

This Drawing Reflects a WMATA standard design approach. Project specific drawings must be developed by the Contractor which reflect this Design Philosophy

DESIGNED	GAH	2-00 DATE
DRAWN	JMR	2-00 DATE
CHECKED		DATE
APPROVED		DATE
UPDATED		DATE

REFERENCE DRAWINGS

NUMBER	DESCRIPTION

REVISIONS

DATE	BY	DESCRIPTION
3/30/17	SYSP	Revised and issued by the Authority

WASHINGTON METROPOLITAN AREA TRANSIT AUTHORITY

DEPARTMENT OF TRANSIT SYSTEM DEVELOPMENT
OFFICE OF SYSTEMS

SUBMITTED _____ DATE

APPROVED _____ DIRECTOR — May 3, 2001 DATE

TYPICAL ROUTE STORAGE CIRCUITS
(SHEET 2 OF 2)

SCALE: NONE

DRAWING NO. ST-ATC-IC-010

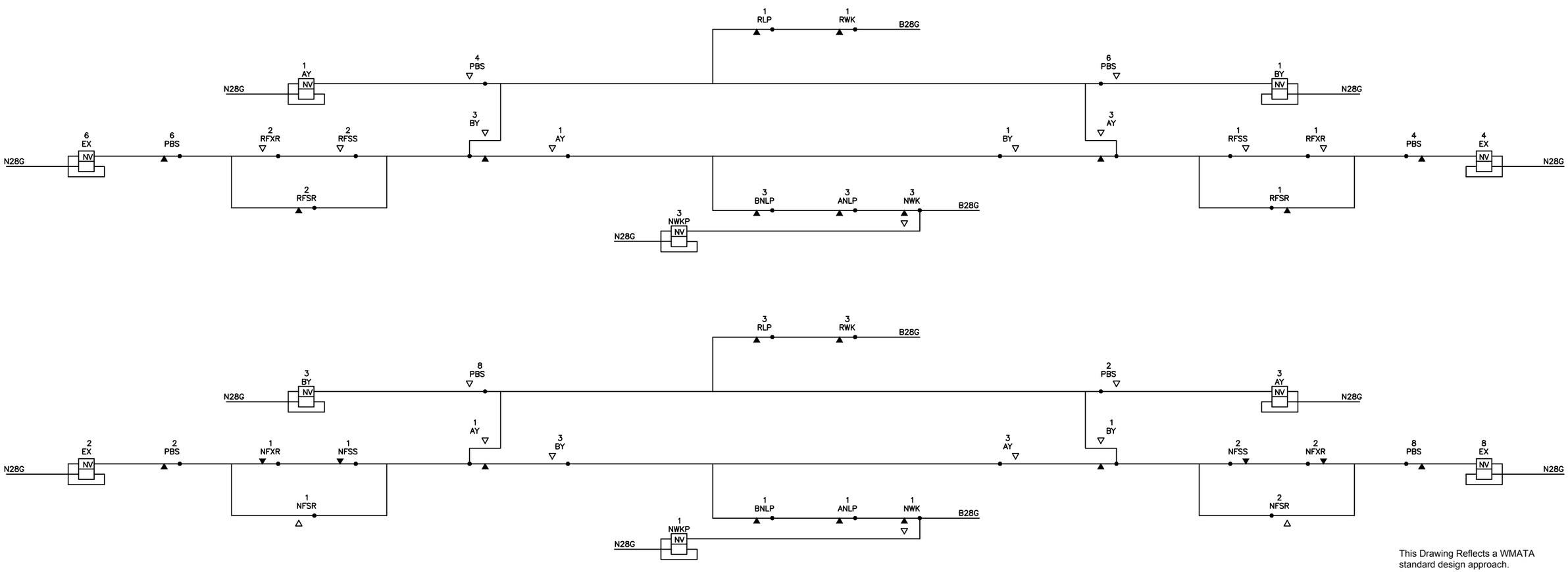

This Drawing Reflects a WMATA standard design approach. Project specific drawings must be developed by the Contractor which reflect this Design Philosophy

		DATE
DESIGNED	GAH	2-00
DRAWN	JMR	2-00
CHECKED		
APPROVED		
UPDATED		

REFERENCE DRAWINGS

NUMBER	DESCRIPTION

REVISIONS

DATE	BY	DESCRIPTION
08/2001	SYSP	Revised and issued by the Authority

WASHINGTON METROPOLITAN AREA TRANSIT AUTHORITY

DEPARTMENT OF TRANSIT SYSTEM DEVELOPMENT
OFFICE OF SYSTEMS

SUBMITTED _____ DATE

APPROVED _____ DIRECTOR — May 3, 2001 DATE

TYPICAL ROUTE INITIATION CIRCUITS (EMERGENCY CROSS-OVER)

SCALE: NONE

DRAWING NO. ST-ATC-IC-011

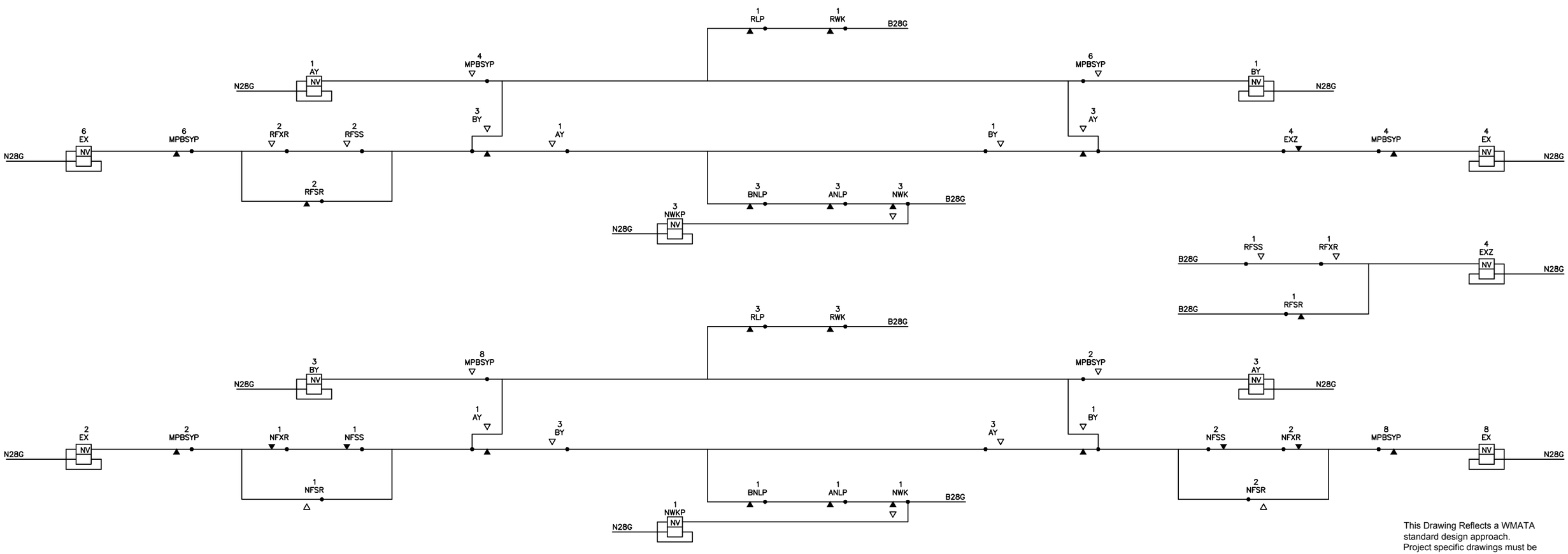

This Drawing Reflects a WMATA standard design approach. Project specific drawings must be developed by the Contractor which reflect this Design Philosophy

DESIGNED	GAH	2-00 DATE
DRAWN	JMR	2-00 DATE
CHECKED		DATE
APPROVED		DATE
UPDATED		DATE

REFERENCE DRAWINGS

NUMBER	DESCRIPTION

REVISIONS

DATE	BY	DESCRIPTION
08/2001	SYSP	Revised and issued by the Authority

WASHINGTON METROPOLITAN AREA TRANSIT AUTHORITY

DEPARTMENT OF TRANSIT SYSTEM DEVELOPMENT
OFFICE OF SYSTEMS

SUBMITTED _____ DATE

APPROVED _____ DIRECTOR — May 3, 2001 DATE

TYPICAL ROUTE INITIATION CIRCUITS
(TERMINAL CROSS-OVER)

SCALE: NONE

DRAWING NO. ST-ATC-IC-012

UNIVERSAL CROSSOVER

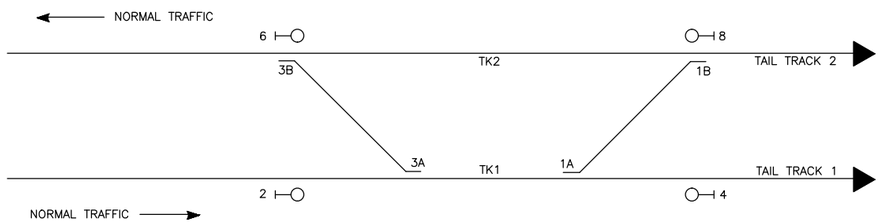

DIAMOND CROSSOVER

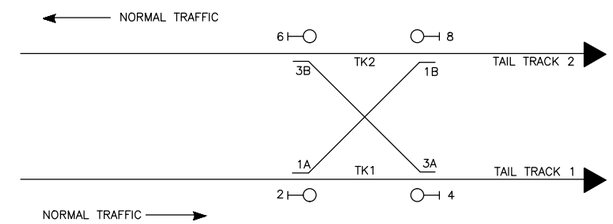

NOTES:

1. CIRCUIT SHALL INCLUDE THE APPROACH AND ADVANCE APPROACH TRACKS AS INDICATED ON THE ROUTE CHART FOR SIGNAL 2.

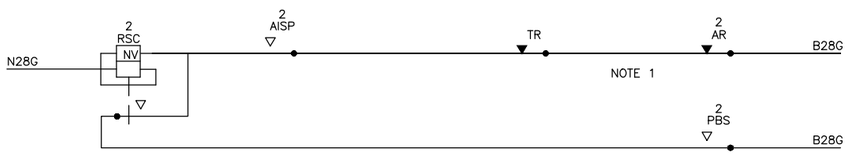

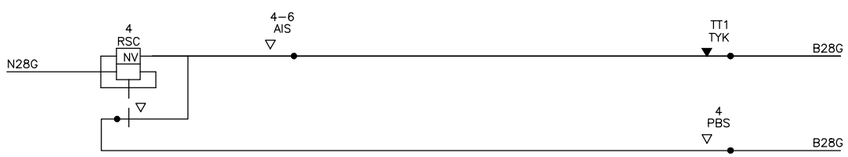

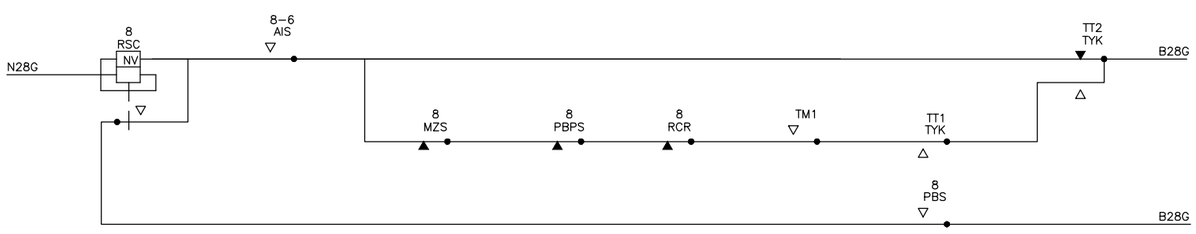

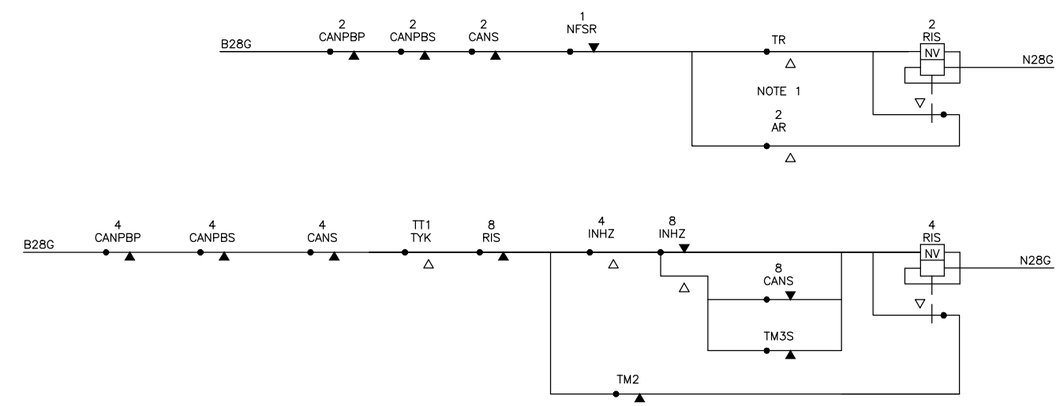

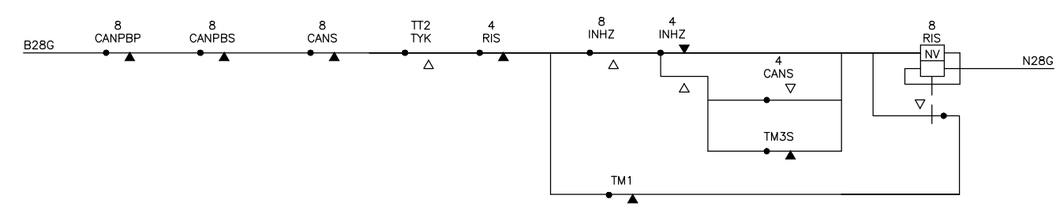

This Drawing Reflects a WMATA standard design approach. Project specific drawings must be developed by the Contractor which reflect this Design Philosophy

DESIGNED	GAH	11–99 DATE
DRAWN	JMR	11–99 DATE
CHECKED		DATE
APPROVED		DATE
UPDATED		DATE

REFERENCE DRAWINGS

NUMBER	DESCRIPTION

REVISIONS

DATE	BY	DESCRIPTION
08/2001	SYSP	Revised and issued by the Authority

WASHINGTON METROPOLITAN AREA TRANSIT AUTHORITY

DEPARTMENT OF TRANSIT SYSTEM DEVELOPMENT
OFFICE OF SYSTEMS

SUBMITTED _____ DATE

APPROVED _____ DIRECTOR May 3, 2001 DATE

TYPICAL ROUTE INITIATION & RESET STICK CANCEL CIRCUITS

SCALE NONE

DRAWING NO. ST–ATC–IC–013

NOTES:

1. CIRCUIT SHALL INCLUDE THE APPROACH AND ADVANCE APPROACH TRACKS AS INDICATED ON THE ROUTE CHART FOR SIGNAL 8.
2. ALL RELAYS AND CIRCUITRY SHOWN ON THIS DRAWING ARE TO BE REMOVED WHEN LINE IS EXTENDED.

UNIVERSAL CROSSOVER

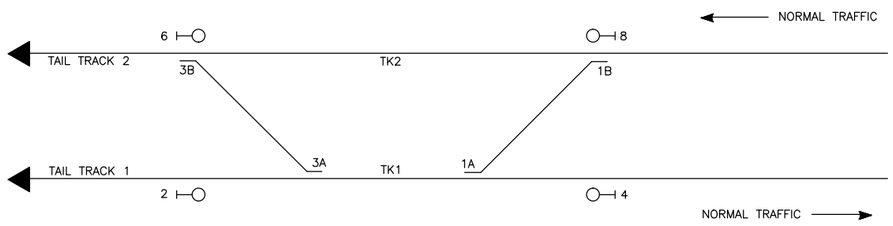

DIAMOND CROSSOVER

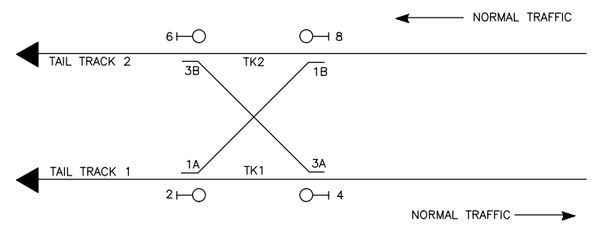

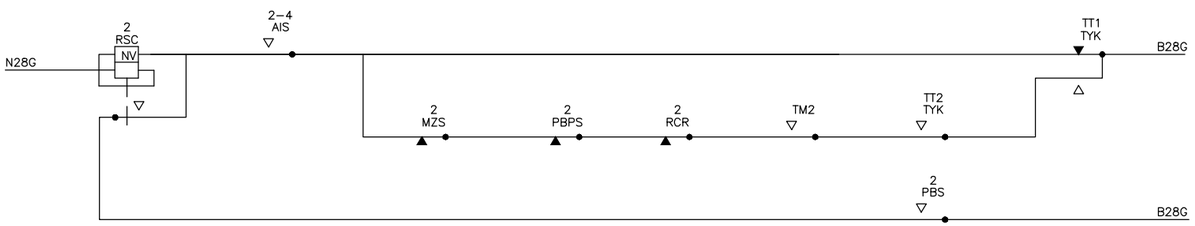

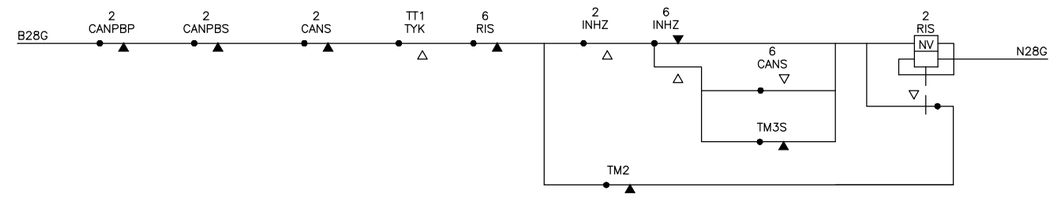

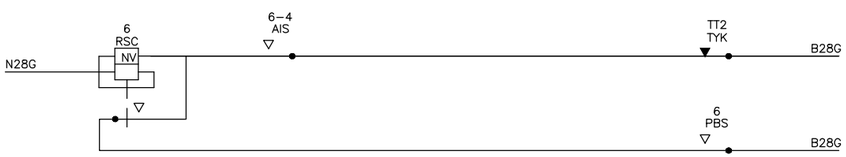

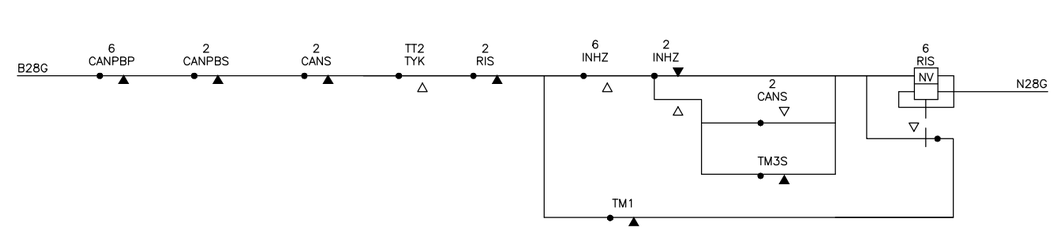

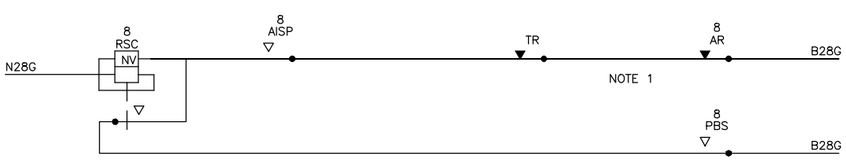

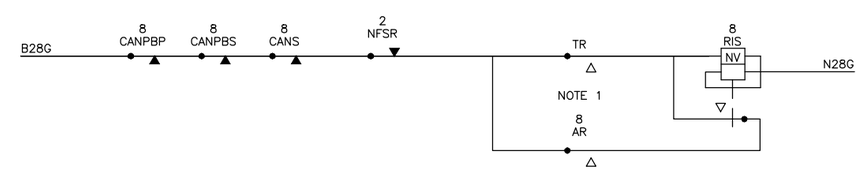

This Drawing Reflects a WMATA standard design approach. Project specific drawings must be developed by the Contractor which reflect this Design Philosophy

DESIGNED	GAH	2–00 DATE
DRAWN	JMR	2–00 DATE
CHECKED		DATE
APPROVED		DATE
UPDATED		DATE

REFERENCE DRAWINGS

NUMBER	DESCRIPTION

REVISIONS

DATE	BY	DESCRIPTION
08/2001	SYSP	Revised and issued by the Authority

WASHINGTON METROPOLITAN AREA TRANSIT AUTHORITY

DEPARTMENT OF TRANSIT SYSTEM DEVELOPMENT
OFFICE OF SYSTEMS

SUBMITTED _____ DATE

APPROVED DIRECTOR _____ May 3, 2001 DATE

TYPICAL ROUTE INITIATION & RESET STICK CANCEL CIRCUITS

SCALE NONE

DRAWING NO. ST–ATC–IC–014

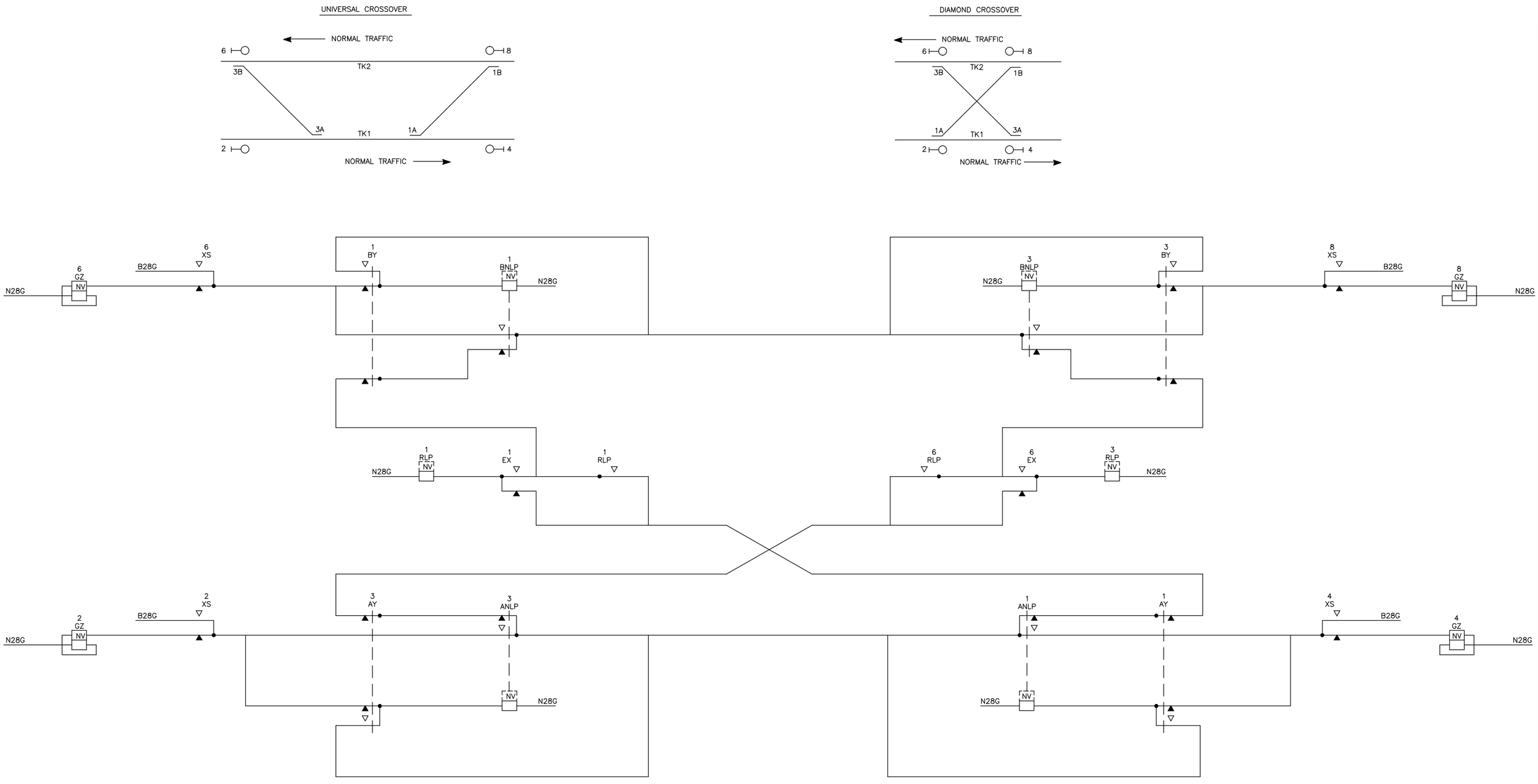

This Drawing Reflects a WMATA standard design approach. Project specific drawings must be developed by the Contractor which reflect this Design Philosophy

DESIGNED	GAH	2-00 DATE
DRAWN	JMR	2-00 DATE
CHECKED		DATE
APPROVED		DATE
UPDATED		DATE

REFERENCE DRAWINGS

NUMBER	DESCRIPTION

REVISIONS

DATE	BY	DESCRIPTION
08/2001	SYSP	Revised and issued by the Authority

WASHINGTON METROPOLITAN AREA TRANSIT AUTHORITY

DEPARTMENT OF TRANSIT SYSTEM DEVELOPMENT
OFFICE OF SYSTEMS

SUBMITTED _____ DATE

APPROVED _____ DIRECTOR May 3, 2001 DATE

TYPICAL ROUTE COMPLETION CIRCUITS

SCALE NONE

DRAWING NO. ST-ATC-IC-016

NOTES:

1. USE "MPBSYB" RELAY CONTACTS INSTEAD OF "PBS" CONTACTS AT TERMINAL CROSSOVER LOCATIONS.

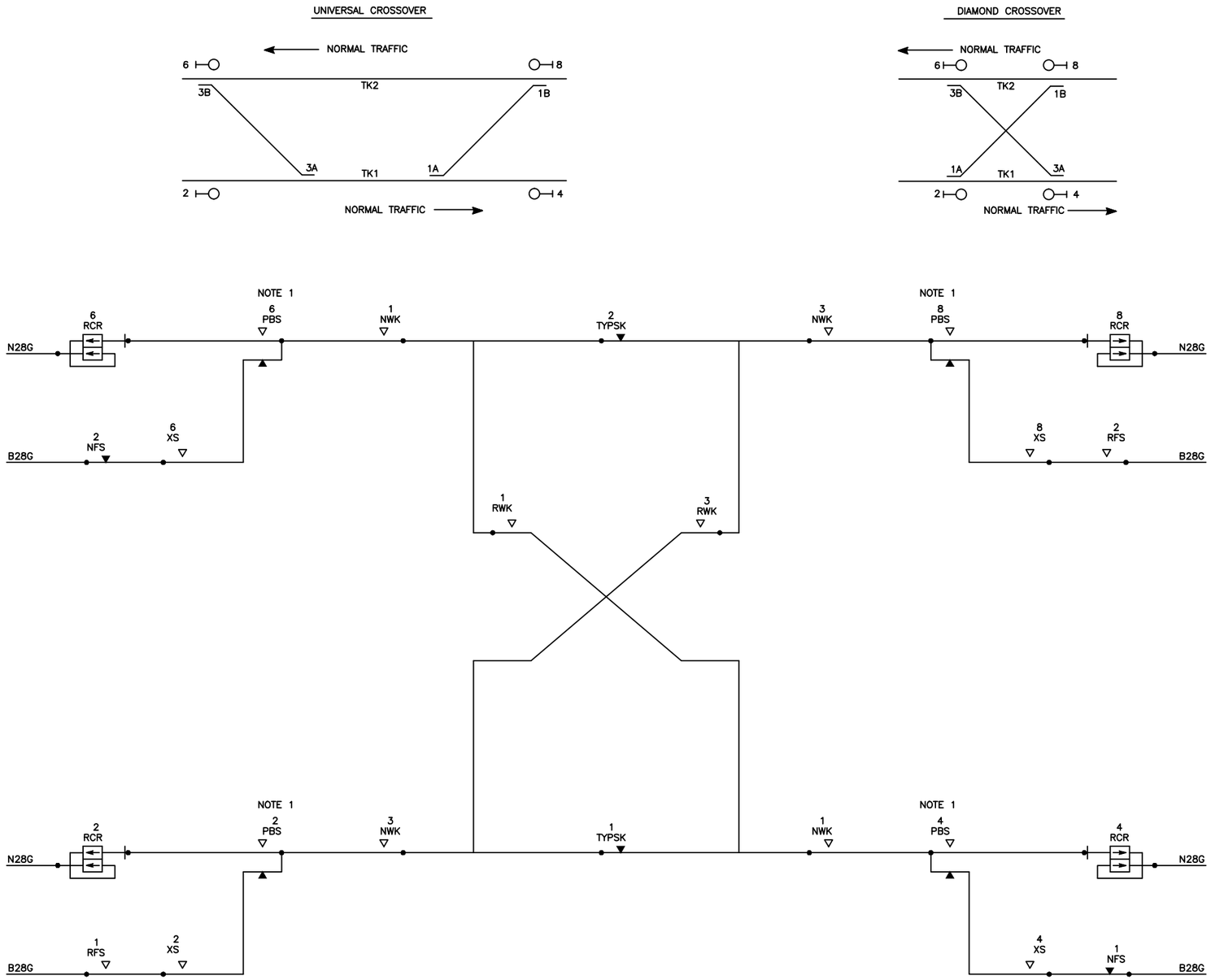

This Drawing Reflects a WMATA standard design approach. Project specific drawings must be developed by the Contractor which reflect this Design Philosophy

DESIGNED	GAH	2-00 DATE
DRAWN	JMR	2-00 DATE
CHECKED		DATE
APPROVED		DATE
UPDATED		DATE

REFERENCE DRAWINGS

NUMBER	DESCRIPTION

REVISIONS

DATE	BY	DESCRIPTION
08/2001	SYSP	Revised and issued by the Authority

WASHINGTON METROPOLITAN AREA TRANSIT AUTHORITY

DEPARTMENT OF TRANSIT SYSTEM DEVELOPMENT
OFFICE OF SYSTEMS

SUBMITTED _____ DATE

APPROVED DIRECTOR _____ May 3, 2001 DATE

TYPICAL ROUTE CHECK CIRCUITS

SCALE NONE

DRAWING NO. ST-ATC-IC-017

NOTES:

1. ASTER TIMER SETTINGS SHALL BE DETERMINED BY THE CONTRACTOR.
2. TRACK CIRCUITS REQUIRED FOR THE RELEASE OF THE ASR'S ARE INDICATED ON ROUTE CHARTS.
3. ALL THE REPEATERS OF THE HGR, AHGPR AND BHGPR RELAYS SHALL ALSO BE BACK CHECKED.

This Drawing Reflects a WMATA standard design approach. Project specific drawings must be developed by the Contractor which reflect this Design Philosophy

UNIVERSAL CROSSOVER

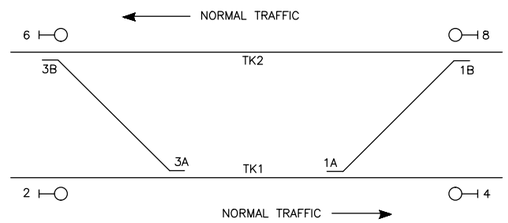

DIAMOND CROSSOVER

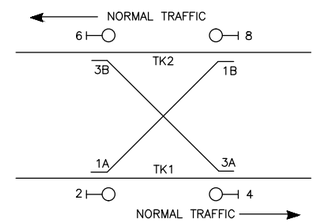

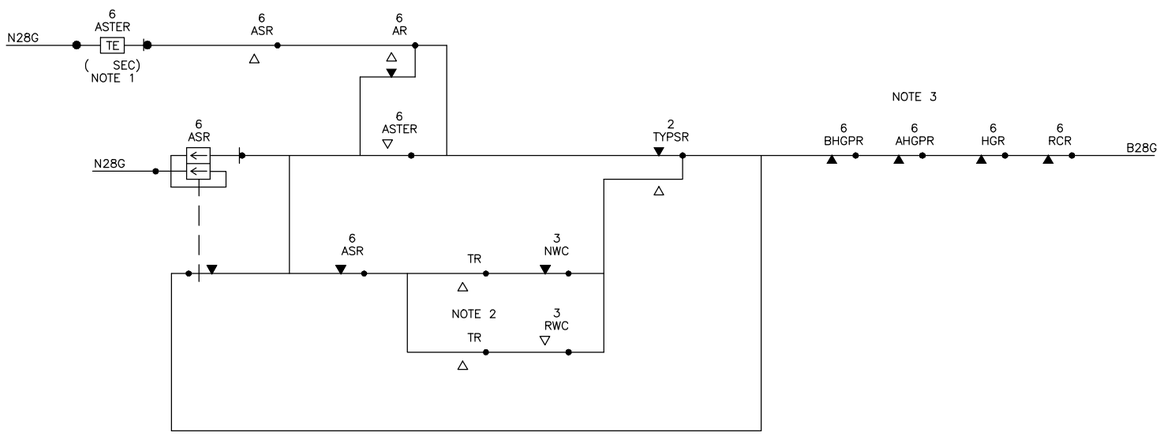

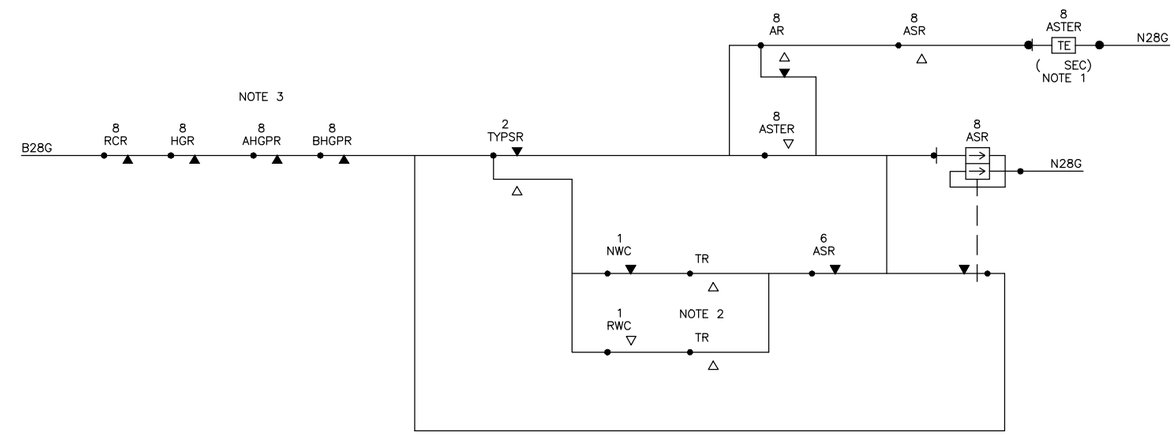

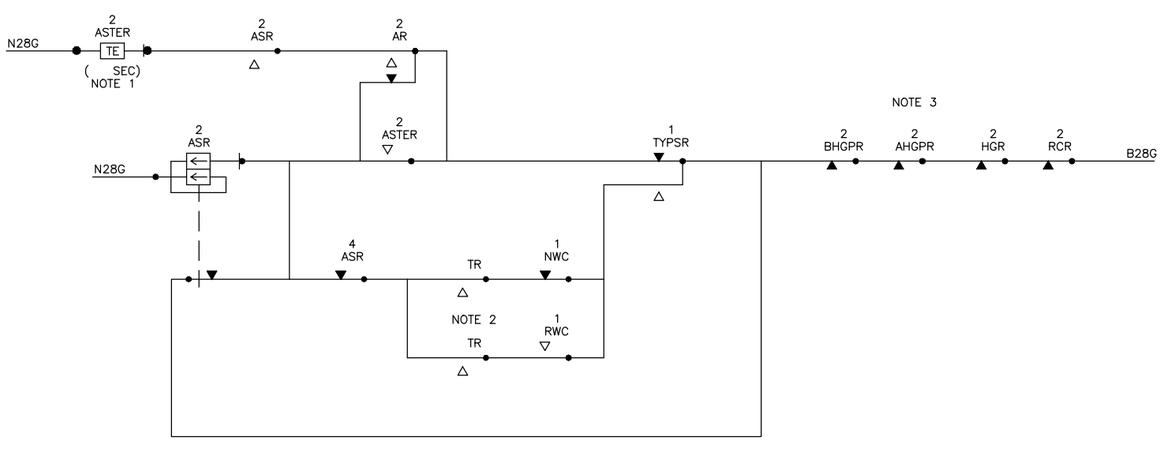

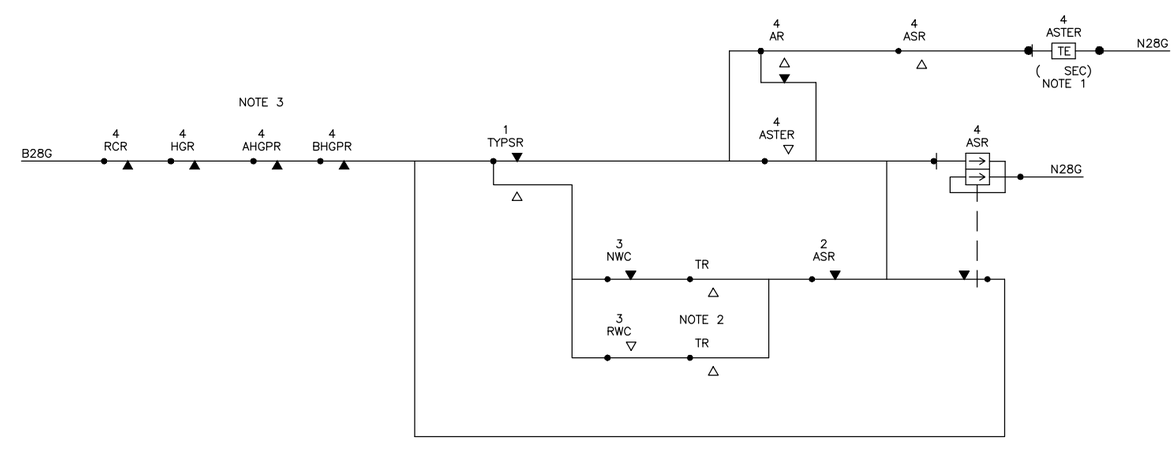

DESIGNED	GAH	2-00 DATE
DRAWN	JMR	2-00 DATE
CHECKED		DATE
APPROVED		DATE
UPDATED		DATE

REFERENCE DRAWINGS

NUMBER	DESCRIPTION

REVISIONS

DATE	BY	DESCRIPTION
08/2001	SYSP	Revised and issued by the Authority

WASHINGTON METROPOLITAN AREA TRANSIT AUTHORITY

DEPARTMENT OF TRANSIT SYSTEM DEVELOPMENT
OFFICE OF SYSTEMS

SUBMITTED _____ DATE

APPROVED _____ DIRECTOR May 3, 2001 DATE

TYPICAL APPROACH STICK CIRCUITS

SCALE NONE

DRAWING NO. ST-ATC-IC-018

UNIVERSAL CROSSOVER

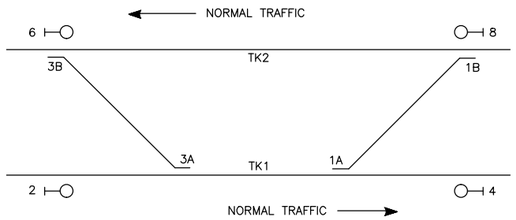

DIAMOND CROSSOVER

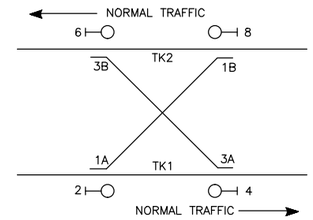

NOTES:

1. TRACK CIRCUITS TO BE INCLUDED IN THE APPROACH CIRCUIT SHALL BE DETERMINED BY THE CONTRACTOR.

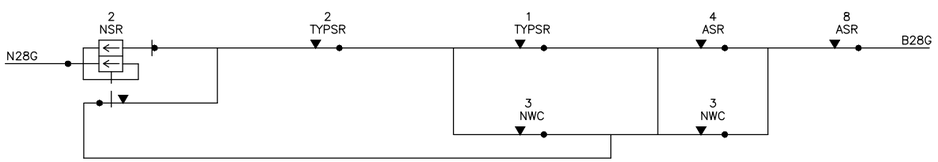

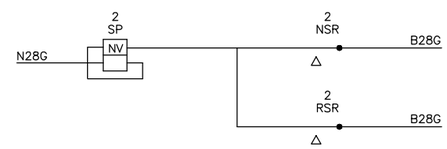

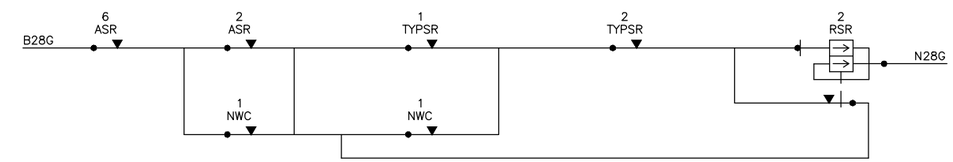

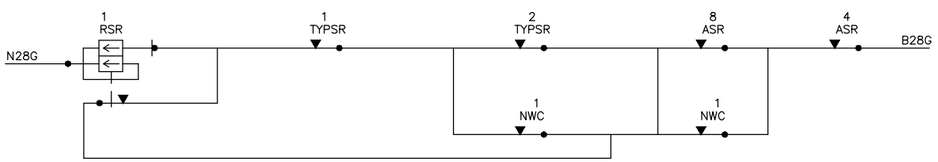

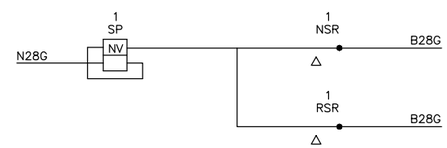

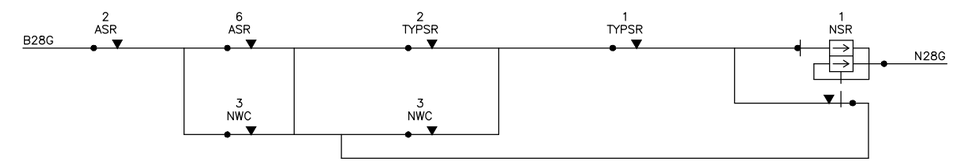

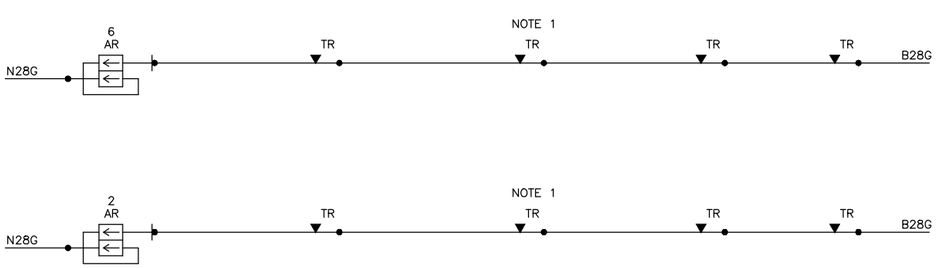

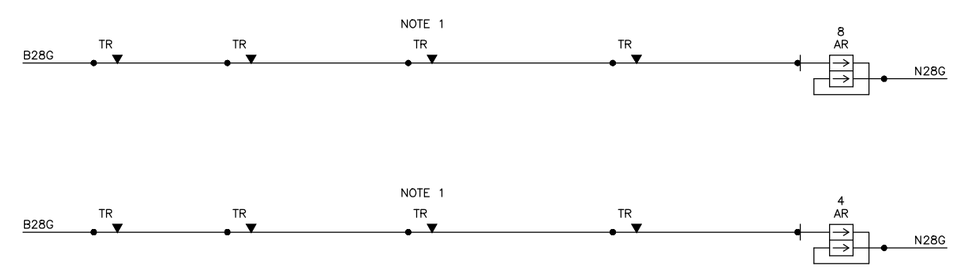

This Drawing Reflects a WMATA standard design approach. Project specific drawings must be developed by the Contractor which reflect this Design Philosophy

DESIGNED	GAH	2-00 DATE
DRAWN	JMR	2-00 DATE
CHECKED		DATE
APPROVED		DATE
UPDATED		DATE

REFERENCE DRAWINGS

NUMBER	DESCRIPTION

REVISIONS

DATE	BY	DESCRIPTION
08/2001	SYSP	Revised and issued by the Authority

WASHINGTON METROPOLITAN AREA TRANSIT AUTHORITY

DEPARTMENT OF TRANSIT SYSTEM DEVELOPMENT
OFFICE OF SYSTEMS

SUBMITTED _____ DATE

APPROVED _____ DIRECTOR — May 3, 2001 DATE

TYPICAL ROUTE STICK & APPROACH CIRCUITS

SCALE: NONE

DRAWING NO. ST-ATC-IC-019

UNIVERSAL CROSSOVER

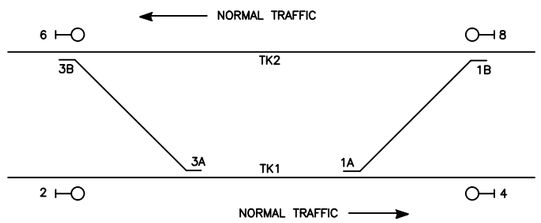

DIAMOND CROSSOVER

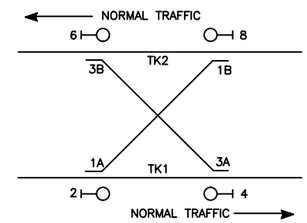

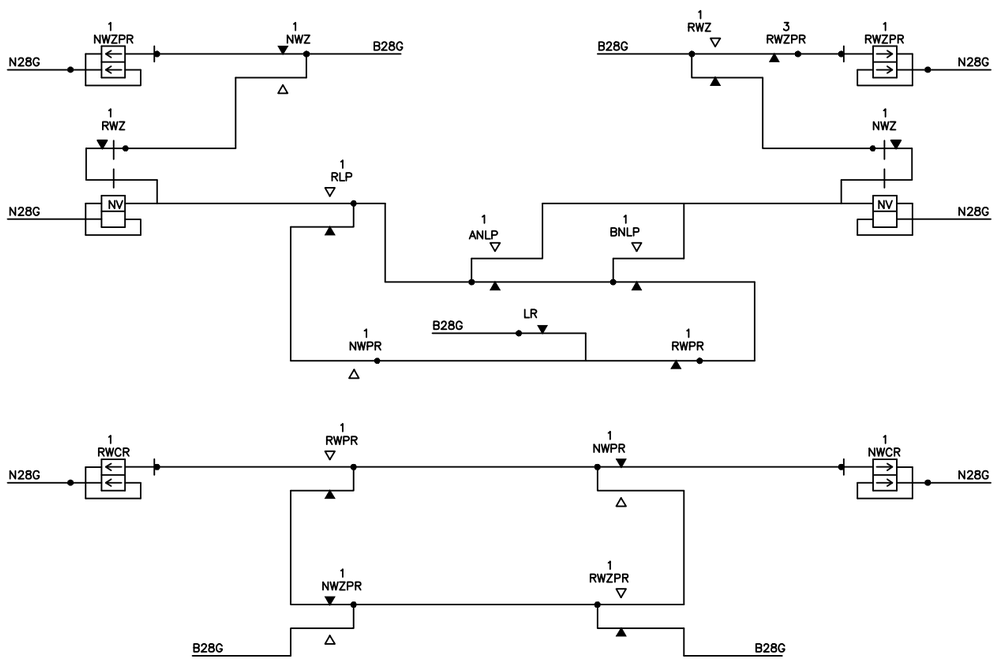

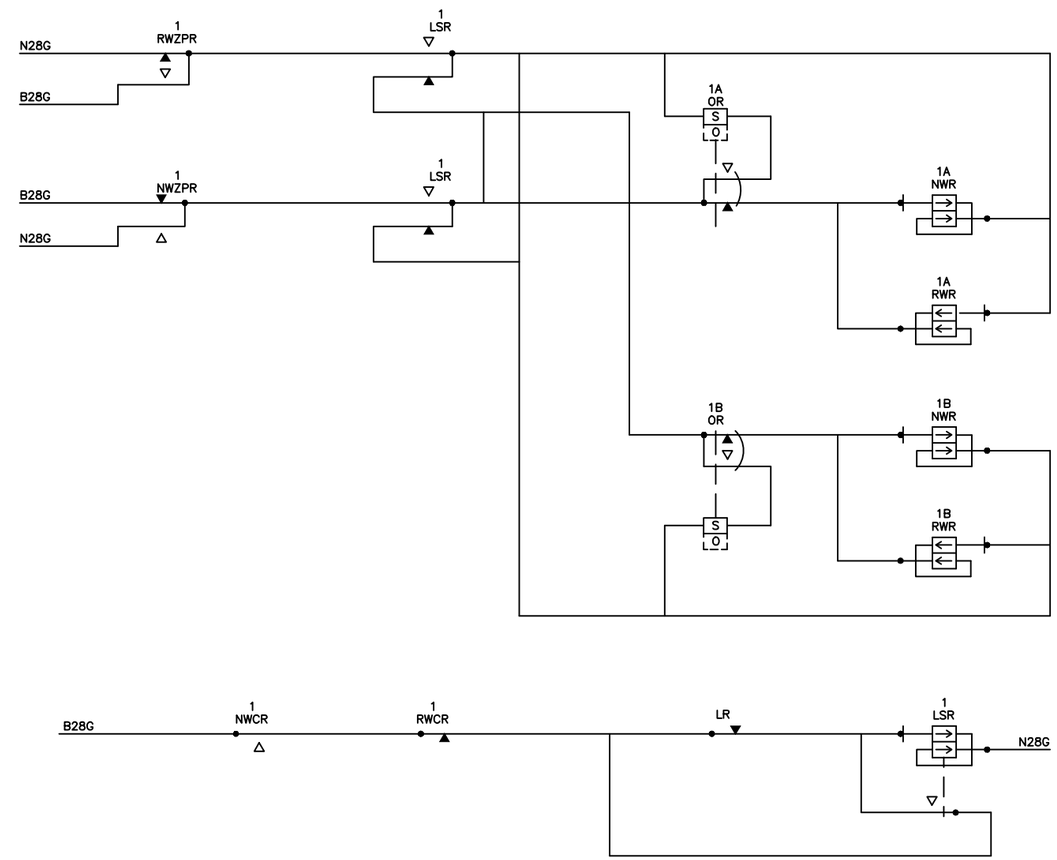

This Drawing Reflects a WMATA standard design approach. Project specific drawings must be developed by the Contractor which reflect this Design Philosophy

DESIGNED	GAH	2-00 DATE
DRAWN	JMR	2-00 DATE
CHECKED		DATE
APPROVED		DATE
UPDATED		DATE

REFERENCE DRAWINGS

NUMBER	DESCRIPTION

REVISIONS

DATE	BY	DESCRIPTION
08/2001	SYSP	Revised and issued by the Authority

WASHINGTON METROPOLITAN AREA TRANSIT AUTHORITY

DEPARTMENT OF TRANSIT SYSTEM DEVELOPMENT
OFFICE OF SYSTEMS

SUBMITTED DATE

APPROVED DIRECTOR May 3, 2001 DATE

TYPICAL SWITCH CONTROL & CORRESPONDENCE CIRCUITS – 1 SWITCH (CROSS-OVER)

SCALE NONE

DRAWING NO. ST-ATC-IC-022

This Drawing Reflects a WMATA standard design approach. Project specific drawings must be developed by the Contractor which reflect this Design Philosophy

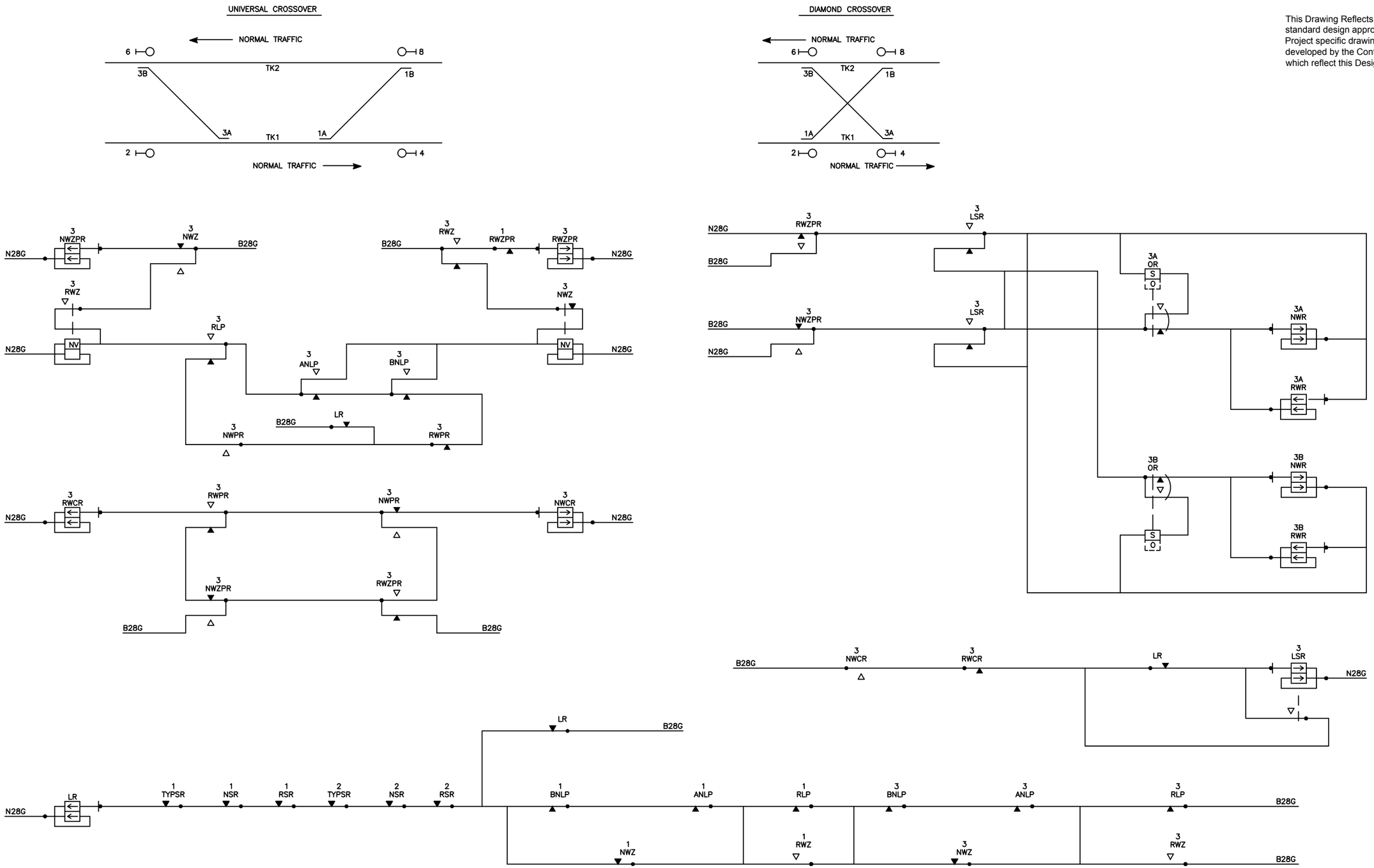

DESIGNED	GAH	2-00 DATE
DRAWN	JMR	2-00 DATE
CHECKED		DATE
APPROVED		DATE
UPDATED		DATE

REFERENCE DRAWINGS

NUMBER	DESCRIPTION

REVISIONS

DATE	BY	DESCRIPTION
08/2001	SYSP	Revised and issued by the Authority

WASHINGTON METROPOLITAN AREA TRANSIT AUTHORITY

DEPARTMENT OF TRANSIT SYSTEM DEVELOPMENT
OFFICE OF SYSTEMS

SUBMITTED _____ DATE

APPROVED _____ DIRECTOR — May 3, 2001 DATE

TYPICAL SWITCH CONTROL & CORRESPONDENCE CIRCUITS – 3 SWITCH (CROSS-OVER)

SCALE: NONE

DRAWING NO. ST-ATC-IC-023

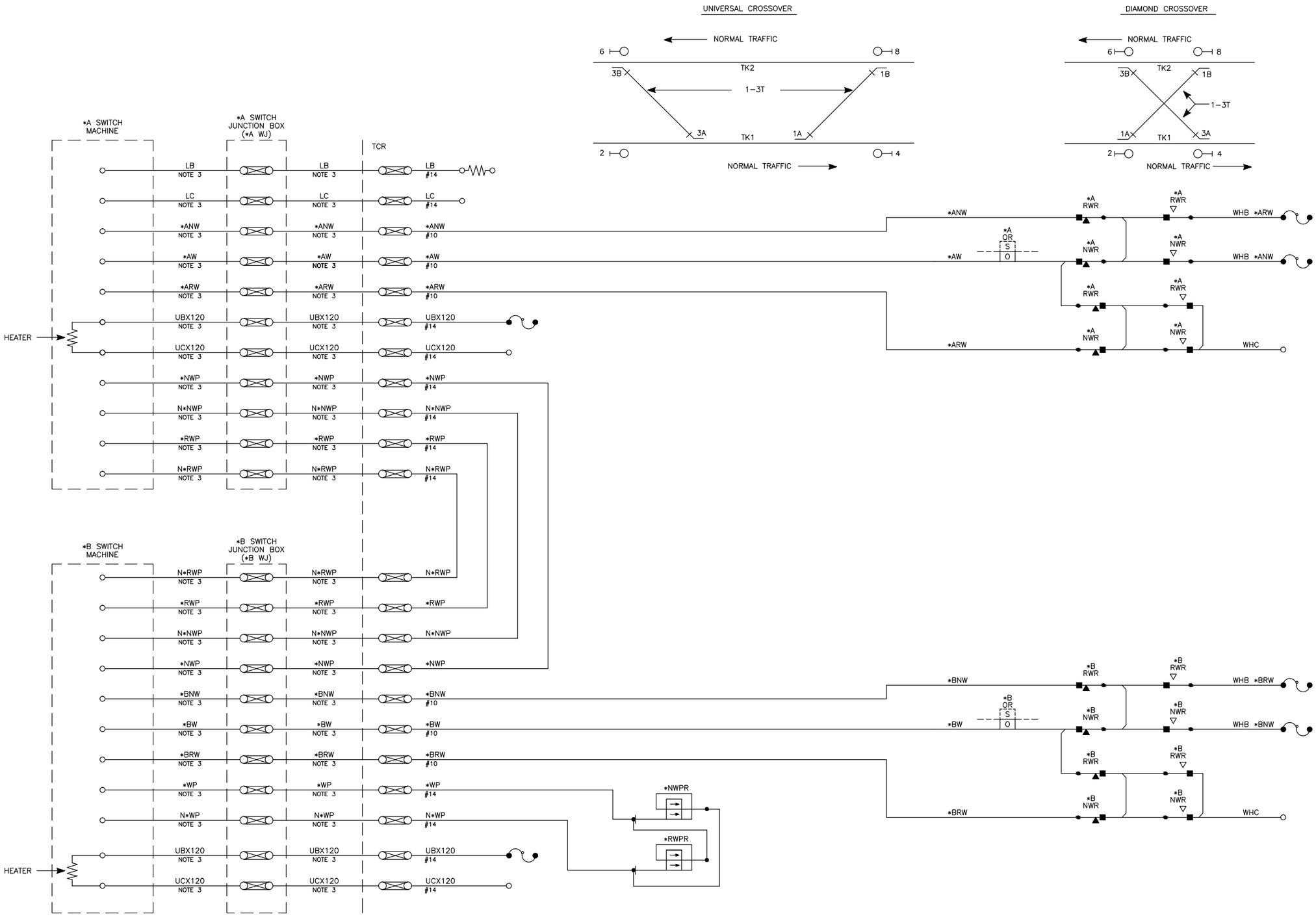

NOTES:

1. CIRCUITS SHOWN FOR SINGLE CROSSOVER; SIMILAR CIRCUIT REQUIRED FOR SECOND CROSSOVER.
2. REPLACE THE "*" WITH SWITCH MACHINE NUMBER
3. FIELD CABLES WIRE SIZE DETERMINED BY DESIGN REQUIREMENTS PER STANDARD SPEC. 32 42 49.

This Drawing Reflects a WMATA standard design approach. Project specific drawings must be developed by the Contractor which reflect this Design Philosophy

DESIGNED	GAH	02/00 DATE
DRAWN	JMR	02/00 DATE
CHECKED		DATE
APPROVED		DATE

REFERENCE DRAWINGS

NUMBER	DESCRIPTION

REVISIONS

DATE	BY	DESCRIPTION
08/2001	SYSP	REVISED AND ISSUED BY THE AUTHORITY
02/10/2017	MM	REVISED FOR FQ15192 (MODIFIED OPERATING CKT)

WASHINGTON METROPOLITAN TRANSIT AUTHORITY

DEPARTMENT OF TRANSIT INFRASTRUCTURE AND ENGINEERING SERVICES
OFFICE OF THE CHIEF ENGINEER, INFRASTRUCTURE

SUBMITTED DATE

APPROVED CHIEF ENGINEER DATE

TYPICAL SWITCH OPERATING & REPEATER CIRCUITS

SCALE

DRAWING NO. ST-ATC-IC-024

SHEET NO.

NOTES:

1. FK RELAYS ARE REQUIRED AT ALL CROSSOVER LOCATIONS. THE REMAINING RELAYS ON THIS PAGE ARE ONLY REQUIRED AT TERMINALS.

2. FOR TERMINAL ARRANGEMENTS HAVING THE "TURNBACK" CROSSOVERS LOCATED OUTBOUND OF THE TERMINAL PLATFORM, THE TT1 & TT2 TYK CIRCUITS SHALL INCLUDE ALL TRACKS FROM THE "INBOUND" TERMINAL INTERLOCKING SIGNALS TO THE BUMPING POST (OR THE NEXT INTERLOCKING); FOR TERMINAL ARRANGEMENTS HAVING THE TERMINAL PLATFORM LOCATED ON THE TAIL TRACKS, THE TT1 & TT2 TYK CIRCUITS SHALL INCLUDE ALL TRACKS FROM THE "INBOUND" TERMINAL INTERLOCKING SIGNALS TO THE BUMPING POST OR THE NEXT INTERLOCKING OR TAIL-TRACK STORAGE HOLD-OUT SIGNALS, AS APPLICABLE.

UNIVERSAL CROSSOVER

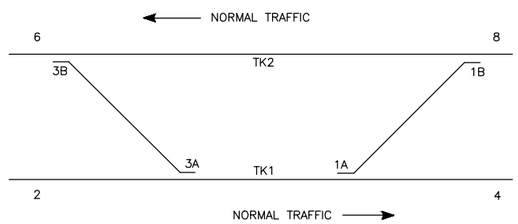

DIAMOND CROSSOVER

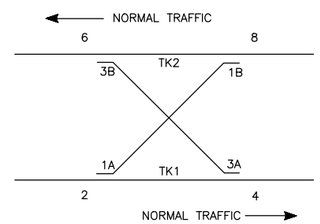

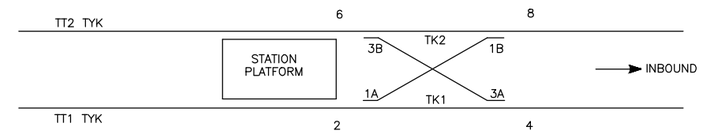

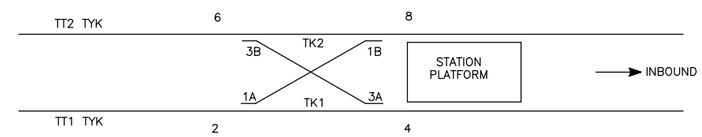

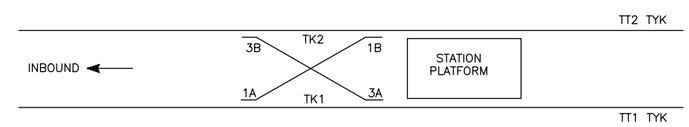

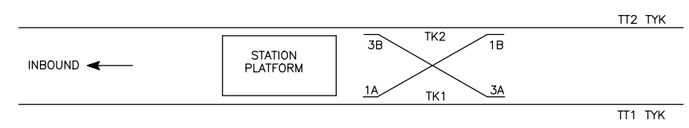

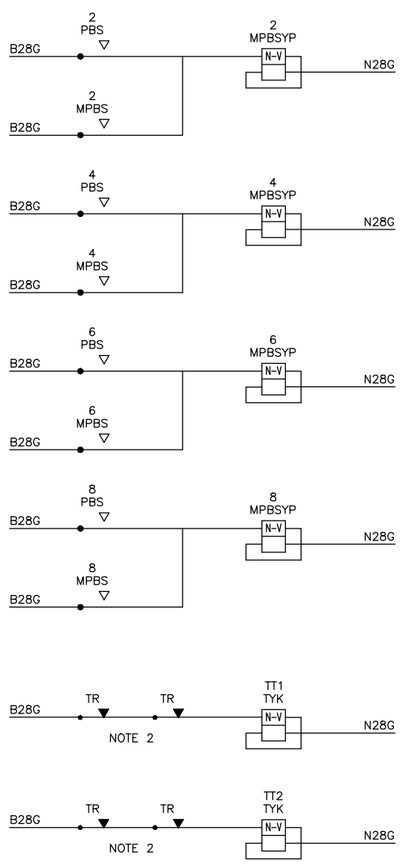

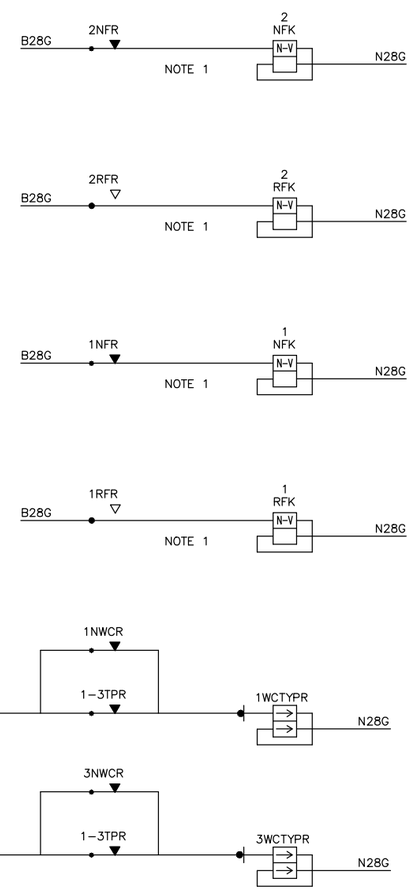

This Drawing Reflects a WMATA standard design approach. Project specific drawings must be developed by the Contractor which reflect this Design Philosophy

DESIGNED	GAH	11-00 DATE
DRAWN	JMR	11-00 DATE
CHECKED		DATE
APPROVED		DATE
UPDATED		DATE

REFERENCE DRAWINGS

NUMBER	DESCRIPTION

REVISIONS

DATE	BY	DESCRIPTION
08/2001	SYSP	Revised and issued by the Authority

WASHINGTON METROPOLITAN AREA TRANSIT AUTHORITY

DEPARTMENT OF TRANSIT SYSTEM DEVELOPMENT
OFFICE OF SYSTEMS

SUBMITTED DATE

APPROVED DIRECTOR May 3, 2001 DATE

TYPICAL REPEATER CIRCUITS

SCALE NONE

DRAWING NO. ST-ATC-IC-025

NOTES:

1. TRACK CIRCUITS LABELED FOR REFERENCE ONLY, ACTUAL NAMES OF TRACK CIRCUITS SHALL BE USED AS SHOWN ON THE CONTRACTORS APPROVED TRACK PLAN.

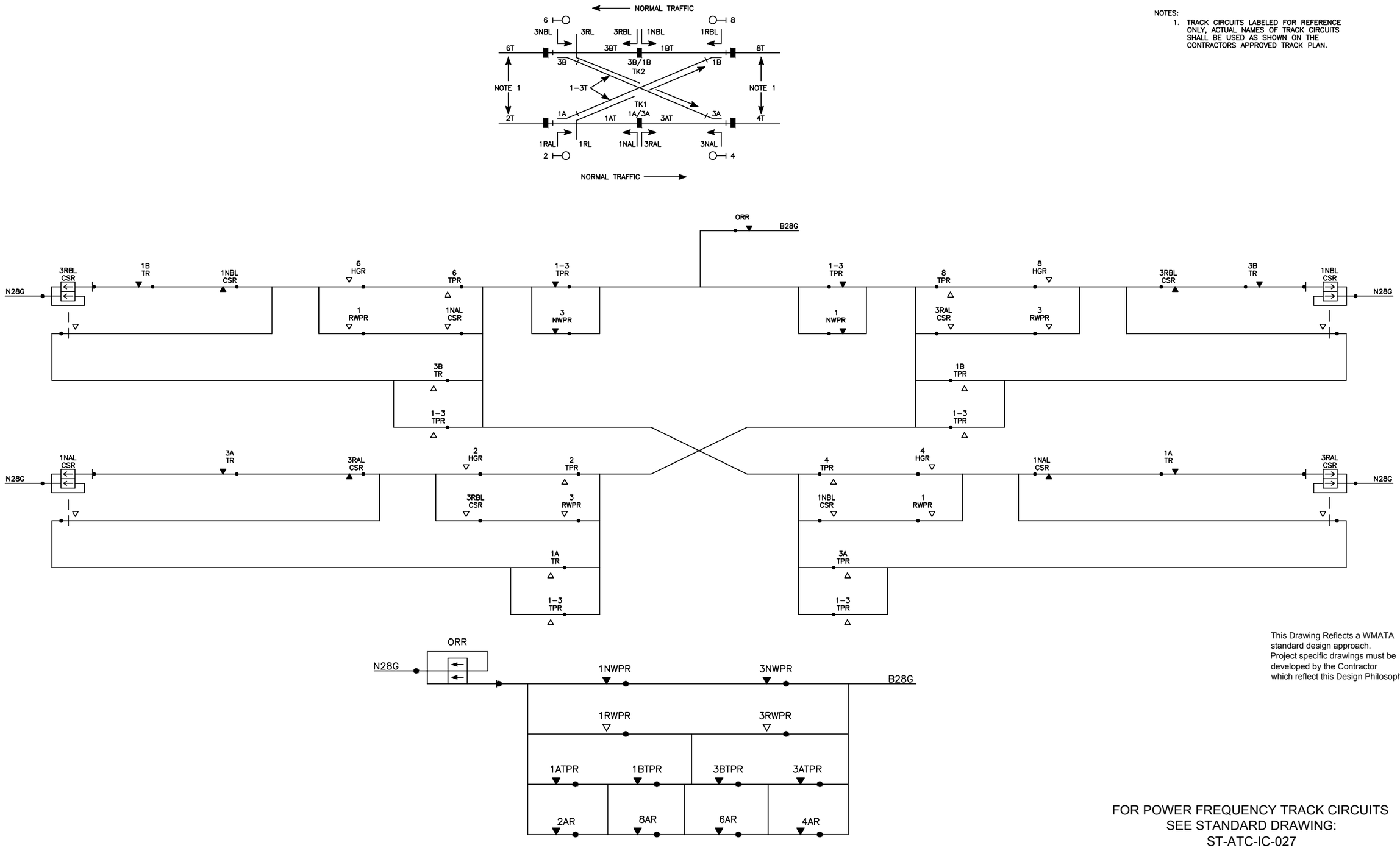

This Drawing Reflects a WMATA standard design approach. Project specific drawings must be developed by the Contractor which reflect this Design Philosophy

FOR POWER FREQUENCY TRACK CIRCUITS
SEE STANDARD DRAWING:
ST-ATC-IC-027

DESIGNED	GAH	02/2000 DATE
DRAWN	JMR	02/2000 DATE
CHECKED		DATE
APPROVED		DATE

REFERENCE DRAWINGS

NUMBER	DESCRIPTION

REVISIONS

DATE	BY	DESCRIPTION
08/2001	SYSP	REVISED AND ISSUED BY THE AUTHORITY
11/03/2016	MM	REVISED FOR FQ15192

WASHINGTON METROPOLITAN TRANSIT AUTHORITY

DEPARTMENT OF TRANSIT INFRASTRUCTURE AND ENGINEERING SERVICES
OFFICE OF THE CHIEF ENGINEER, INFRASTRUCTURE

SUBMITTED _____ DATE

APPROVED _____ CHIEF ENGINEER DATE

TYPICAL SPEED COMMAND LOOP CONTROL STICK CIRCUITS (AUDIO FREQUENCY)

SCALE	DRAWING NO.	SHEET NO.
	ST-ATC-IC-026	

NOTES: 1. TRACK CIRCUITS LABELED FOR REFERENCE ONLY, ACTUAL NAMES OF TRACK CIRCUITS SHALL BE USED AS SHOWN ON THE CONTRACTORS APPROVED TRACK PLAN.

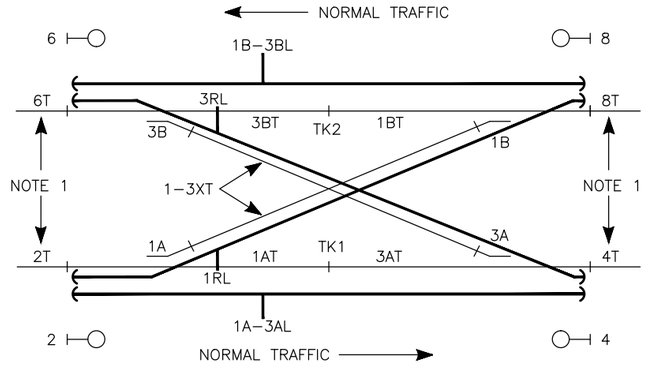

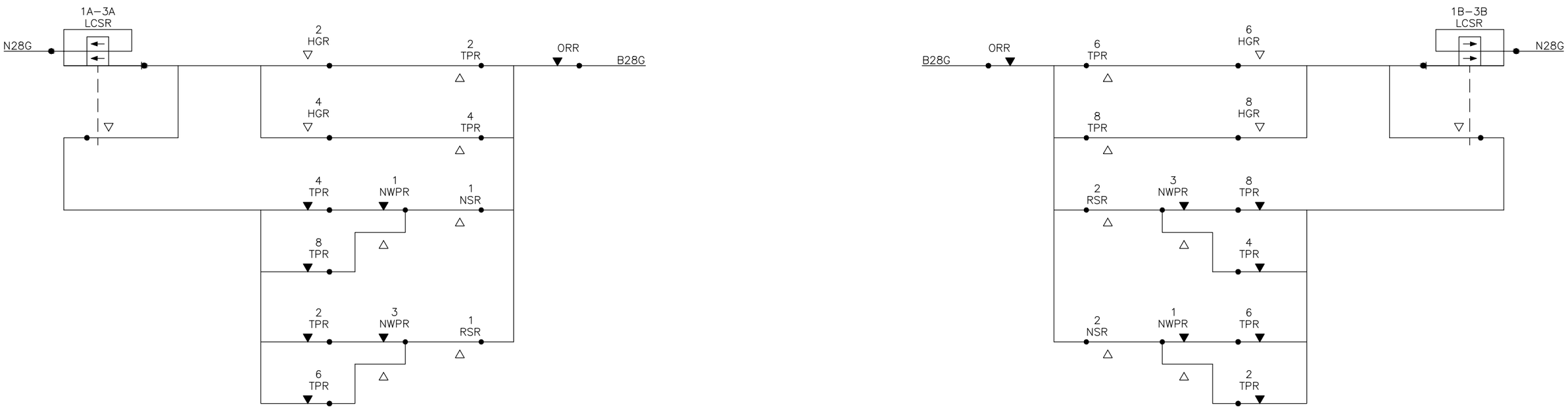

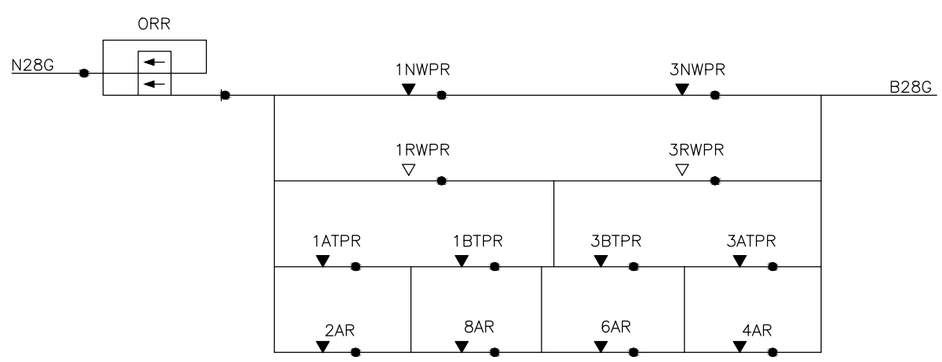

This Drawing Reflects a WMATA standard design approach. Project specific drawings must be developed by the Contractor which reflect this Design Philosophy

FOR AUDIO FREQUENCY TRACK CIRCUITS
SEE STANDARD DRAWING:
ST-ATC-IC-026

DESIGNED	ACC	11/2016 DATE
DRAWN	DMR	11/2016 DATE
CHECKED		DATE
APPROVED		DATE

REFERENCE DRAWINGS

NUMBER	DESCRIPTION

REVISIONS

DATE	BY	DESCRIPTION
11/03/2016	MM	CREATED FOR FQ15192

WASHINGTON METROPOLITAN TRANSIT AUTHORITY

DEPARTMENT OF TRANSIT INFRASTRUCTURE AND ENGINEERING SERVICES
OFFICE OF THE CHIEF ENGINEER, INFRASTRUCTURE

SUBMITTED DATE

APPROVED CHIEF ENGINEER DATE

TYPICAL SPEED COMMAND LOOP CONTROL STICK CIRCUITS (POWER FREQUENCY)

SCALE

DRAWING NO. ST-ATC-IC-027

SHEET NO.

NOTES:
1. TRACK CIRCUITS LABELED FOR REFERENCE ONLY, ACTUAL NAMES OF TRACK CIRCUITS SHALL BE USED AS SHOWN ON THE CONTRACTORS APPROVED TRACK PLAN.

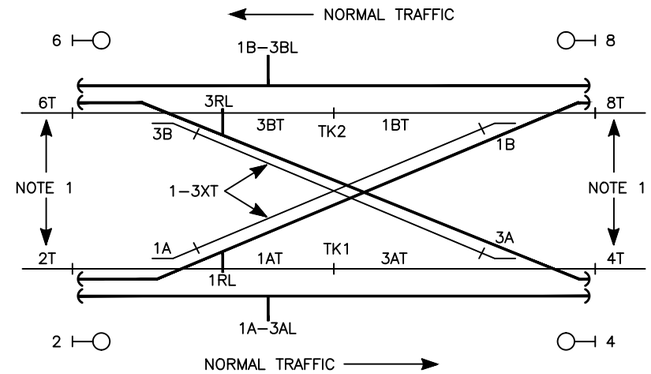

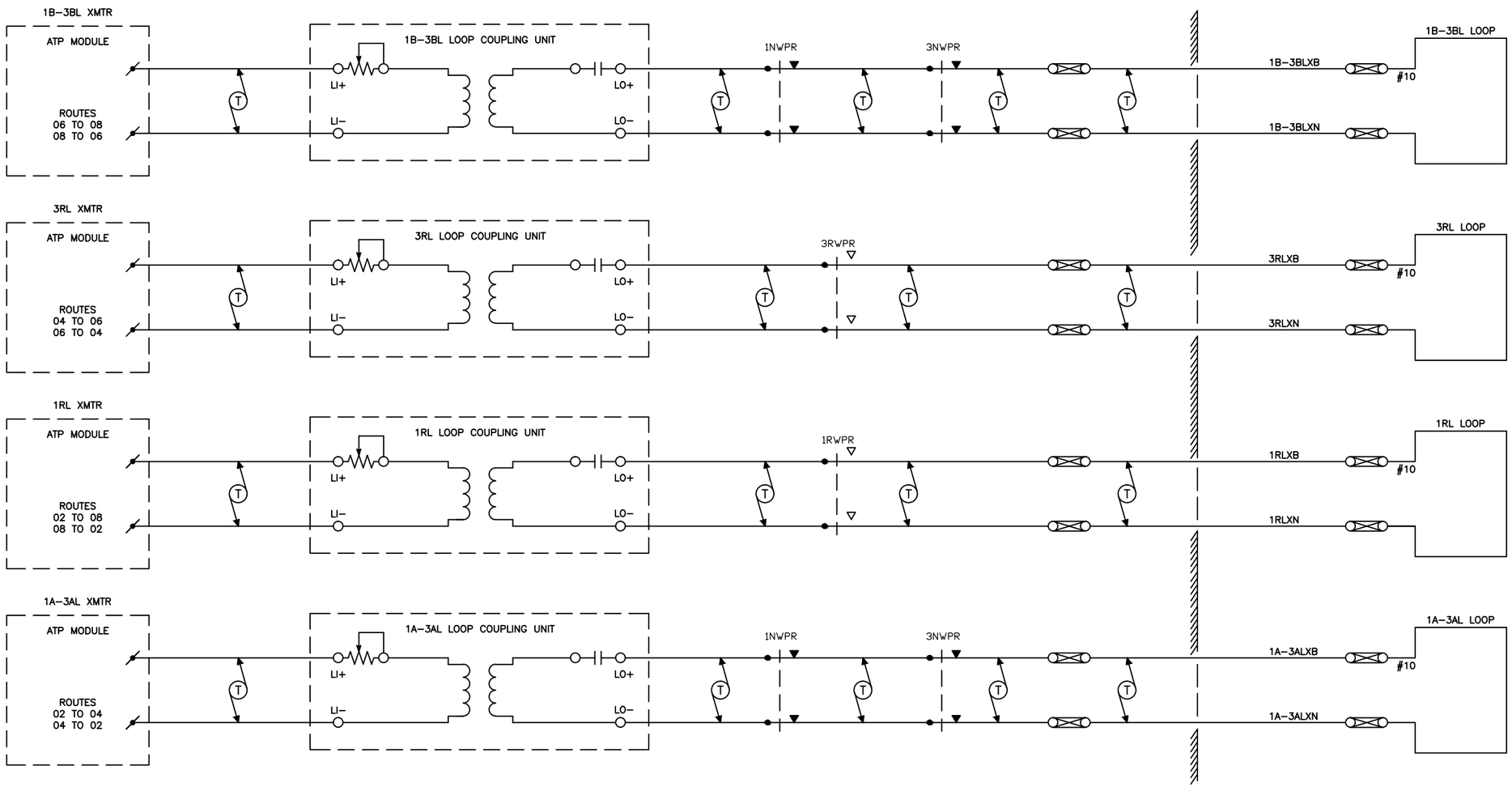

This Drawing Reflects a WMATA standard design approach. Project specific drawings must be developed by the Contractor which reflect this Design Philosophy

FOR AUDIO FREQUENCY TRACK CIRCUITS
SEE STANDARD DRAWING:
ST-ATC-IC-028

DESIGNED	ACC	11/2016 DATE
DRAWN	DMR	11/2016 DATE
CHECKED		DATE
APPROVED		DATE

REFERENCE DRAWINGS

NUMBER	DESCRIPTION

REVISIONS

DATE	BY	DESCRIPTION
11/03/2016	MM	REVISED FOR FQ15192

WASHINGTON METROPOLITAN TRANSIT AUTHORITY

DEPARTMENT OF TRANSIT INFRASTRUCTURE AND ENGINEERING SERVICES
OFFICE OF THE CHIEF ENGINEER, INFRASTRUCTURE

SUBMITTED DATE

APPROVED CHIEF ENGINEER DATE

TYPICAL SPEED COMMAND LOOP CIRCUITS, LONG WIRE LOOPS (POWER FREQUENCY)

SCALE

DRAWING NO. ST-ATC-IC-029

SHEET NO.

UNIVERSAL CROSSOVER

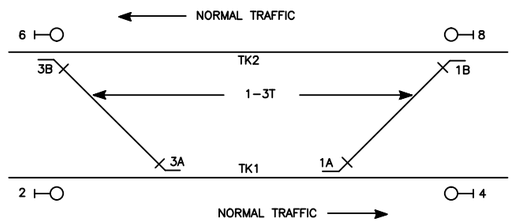

DIAMOND CROSSOVER

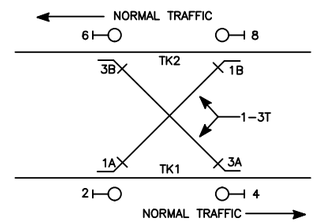

NOTES:

1. TER BACK CONTACT IS REQUIRED AT AUTOMATIC INTERLOCKINGS. WHEN THE INTERLOCKING IS AT A TERMINAL STATION, PROVISION SHALL BE MADE TO JUMPER OUT THIS TER CONTACT WHEN THE LINE IS EXTENDED AND THE INTERLOCKING IS NO LONGER AUTOMATIC.

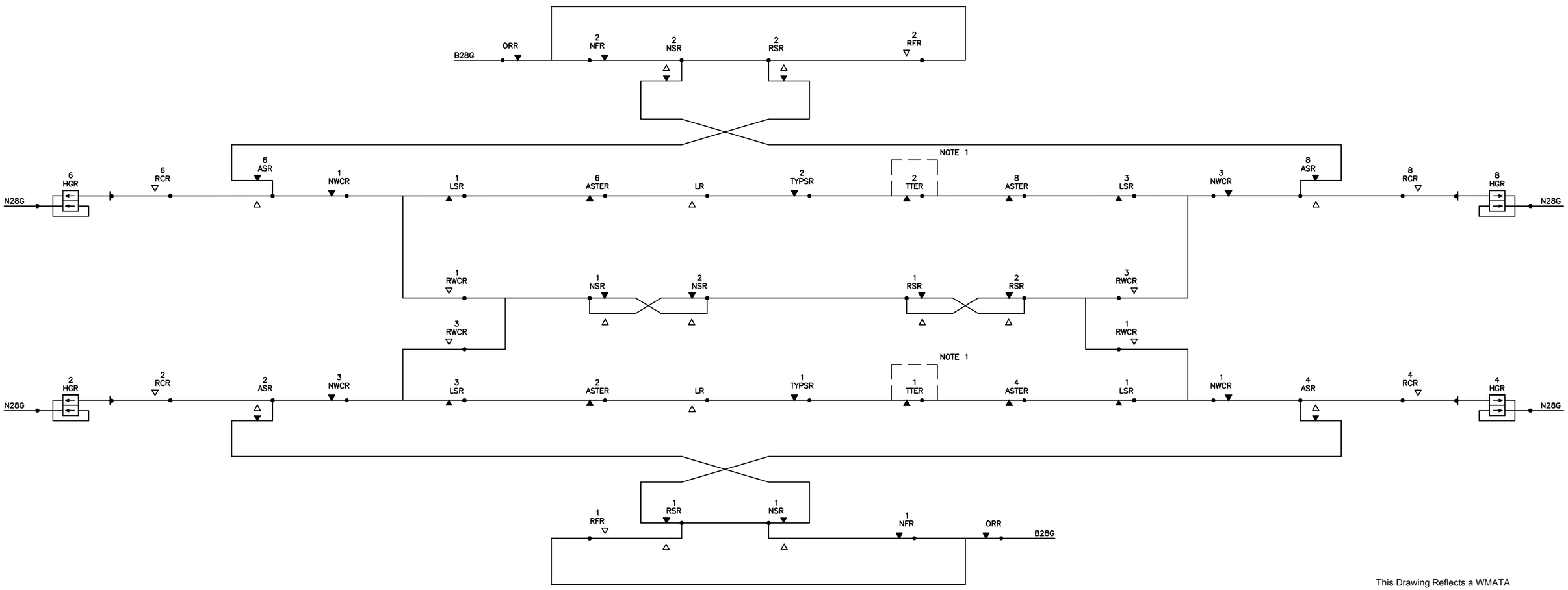

This Drawing Reflects a WMATA standard design approach. Project specific drawings must be developed by the Contractor which reflect this Design Philosophy

DESIGNED	GAH	2–00 DATE
DRAWN	JMR	2–00 DATE
CHECKED		DATE
APPROVED		DATE
UPDATED		DATE

REFERENCE DRAWINGS

NUMBER	DESCRIPTION

REVISIONS

DATE	BY	DESCRIPTION
08/2001	SYSP	Revised and issued by the Authority

WASHINGTON METROPOLITAN AREA TRANSIT AUTHORITY

DEPARTMENT OF TRANSIT SYSTEM DEVELOPMENT
OFFICE OF SYSTEMS

SUBMITTED _____ DATE

APPROVED _____ DIRECTOR May 3, 2001 DATE

TYPICAL SIGNAL CONTROL CIRCUITS
(CROSS–OVER INTERLOCKINGS)

SCALE NONE

DRAWING NO. ST–ATC–IC–031

This Drawing Reflects a WMATA standard design approach. Project specific drawings must be developed by the Contractor which reflect this Design Philosophy

DESIGNED	GAH	2-00 DATE
DRAWN	JMR	2-00 DATE
CHECKED		DATE
APPROVED		DATE
UPDATED		DATE

REFERENCE DRAWINGS

NUMBER	DESCRIPTION

REVISIONS

DATE	BY	DESCRIPTION
08/2001	SYSP	Revised and issued by the Authority

WASHINGTON METROPOLITAN AREA TRANSIT AUTHORITY

DEPARTMENT OF TRANSIT SYSTEM DEVELOPMENT
OFFICE OF SYSTEMS

SUBMITTED _____ DATE

APPROVED _____ DIRECTOR May 3, 2001 DATE

TYPICAL SIGNAL REPEATER CIRCUITS (EMERGENCY CROSS-OVER)

SCALE: NONE

DRAWING NO. ST-ATC-IC-032

NOTES:

1. TPR SHALL INCLUDE ALL TRACK CIRCUITS FROM SIGNAL 2 TO BUMPING POST ON TRACK 1.
2. TPR SHALL INCLUDE ALL TRACK CIRCUITS FROM SIGNAL 6 TO BUMPING POST ON TRACK 2.
3. THE CONTRACTOR SHALL INCLUDE FACILITIES FOR THE FUTURE JUMPERING OUT OF THESE CONTACTS WHEN ROUTE IS EXTENDED.

UNIVERSAL CROSSOVER

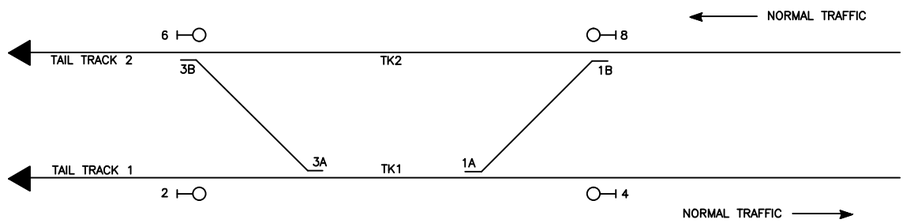

DIAMOND CROSSOVER

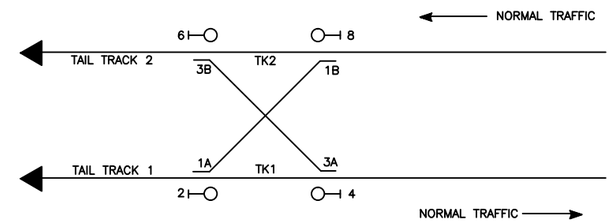

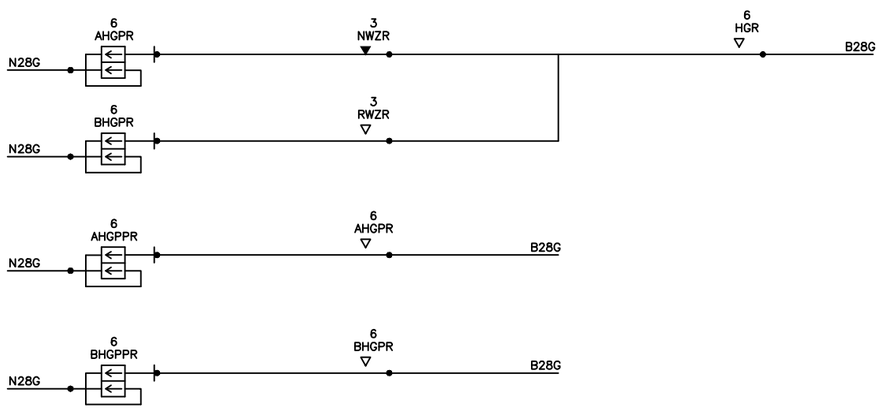

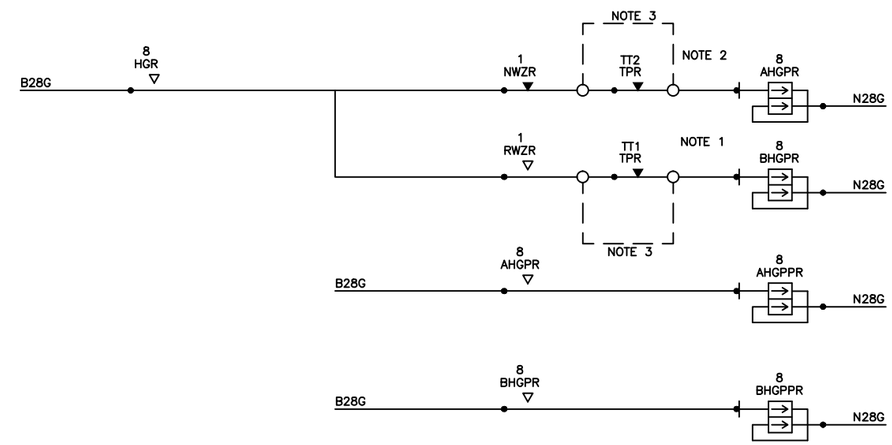

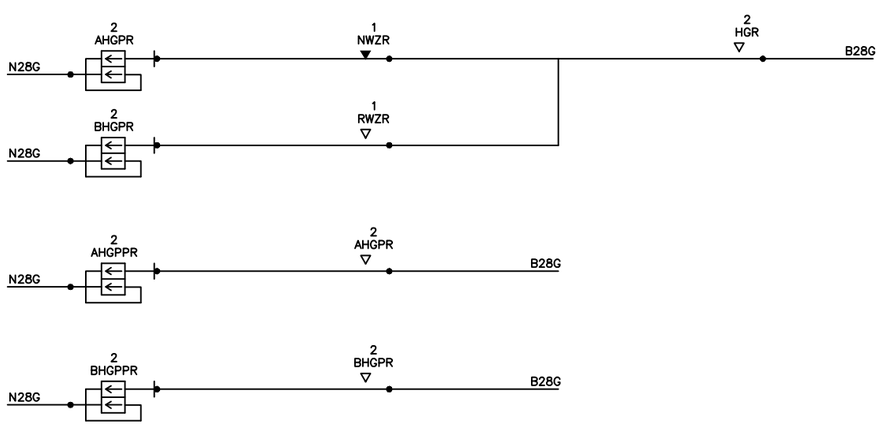

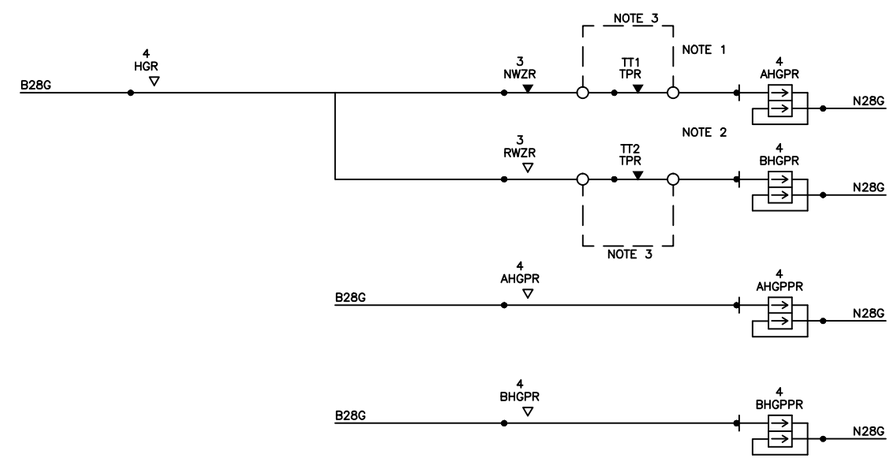

This Drawing Reflects a WMATA standard design approach. Project specific drawings must be developed by the Contractor which reflect this Design Philosophy

DESIGNED	GAH	2-00 DATE
DRAWN	JMR	2-00 DATE
CHECKED		DATE
APPROVED		DATE
UPDATED		DATE

REFERENCE DRAWINGS

NUMBER	DESCRIPTION

REVISIONS

DATE	BY	DESCRIPTION
08/2001	SYSP	Revised and issued by the Authority

WASHINGTON METROPOLITAN AREA TRANSIT AUTHORITY

DEPARTMENT OF TRANSIT SYSTEM DEVELOPMENT
OFFICE OF SYSTEMS

SUBMITTED _____ DATE

APPROVED _____ DIRECTOR May 3, 2001 DATE

TYPICAL SIGNAL REPEATER CIRCUITS
(TERMINAL CROSS-OVER)

SCALE: NONE

DRAWING NO. ST-ATC-IC-033

BALANCING IMPEDANCE STYLE

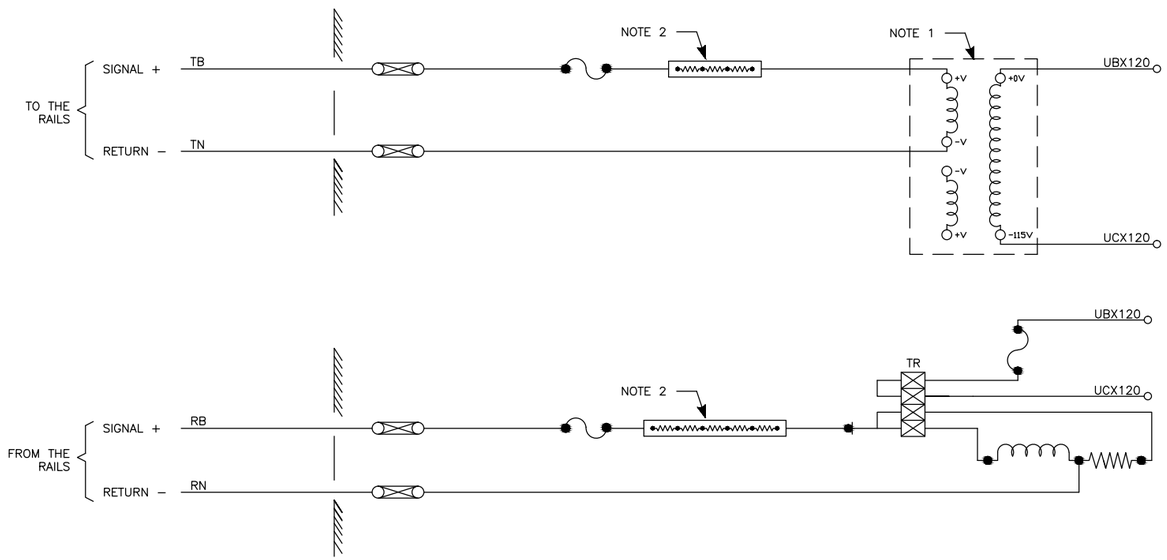

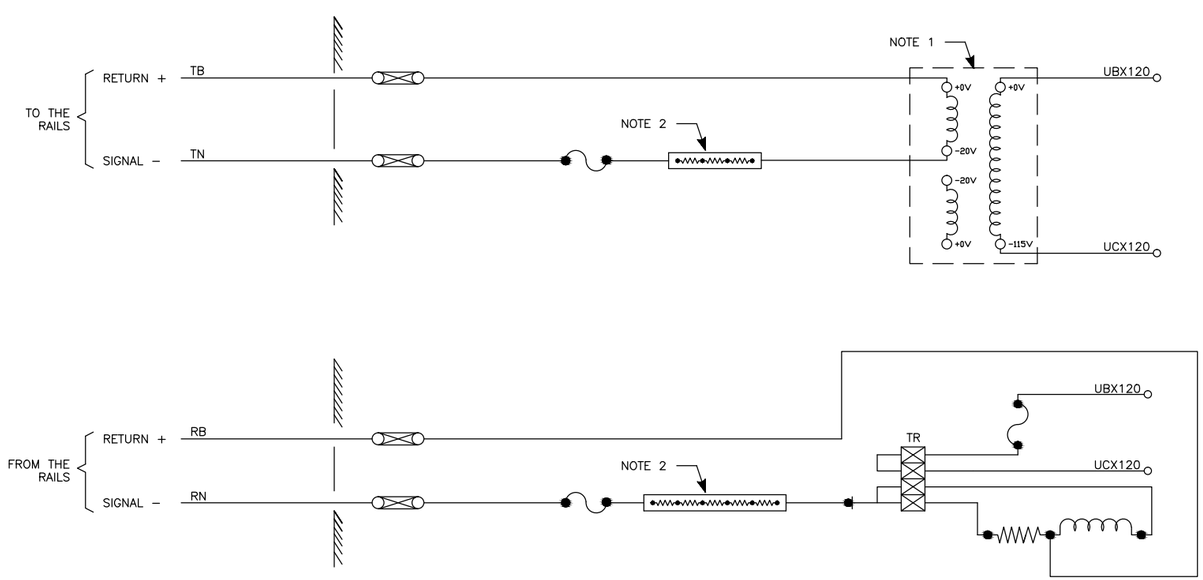

RELAY TRANSFORMER STYLE

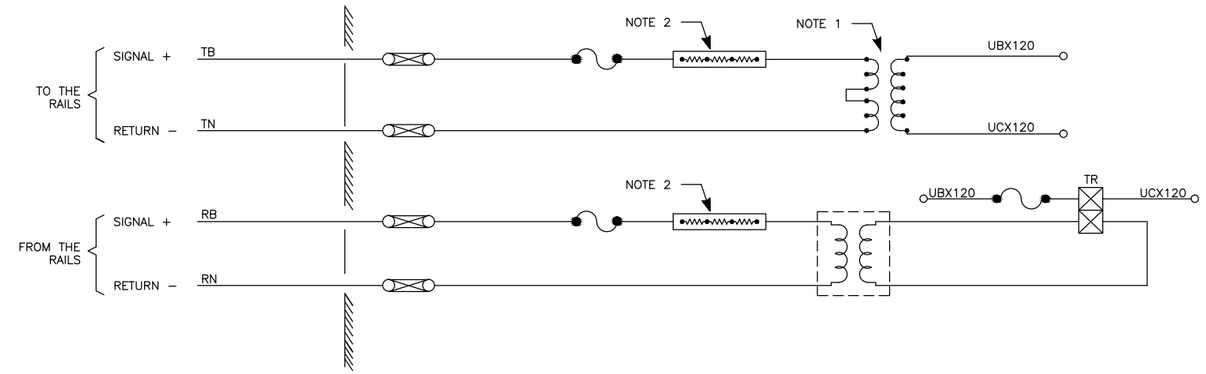

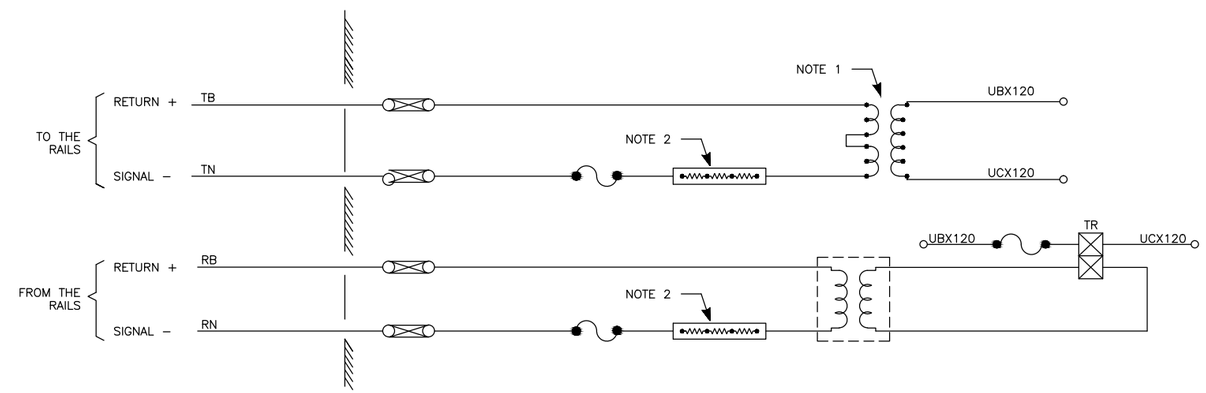

This Drawing Reflects a WMATA standard design approach. Project specific drawings must be developed by the Contractor which reflect this Design Philosophy

NOTES:

1. TRANSFORMER SHALL HAVE VARIOUS TAPS ON THE INPUT AND OUTPUT.
2. FEED AND RELAY END RESISTORS SHALL HAVE VARIOUS TAPS.

DESIGNED		DATE
DRAWN	ACC	11/03/2016 DATE
CHECKED		DATE
APPROVED		DATE

REFERENCE DRAWINGS

NUMBER	DESCRIPTION

REVISIONS

DATE	BY	DESCRIPTION
11/03/2016	MM	CIRCUITS MOVED FROM ST-ATC-IC-035 FOR FQ15192

WASHINGTON METROPOLITAN TRANSIT AUTHORITY

DEPARTMENT OF TRANSIT INFRASTRUCTURE AND ENGINEERING SERVICES
OFFICE OF THE CHIEF ENGINEER, INFRASTRUCTURE

SUBMITTED _____ DATE

APPROVED CHIEF ENGINEER _____ DATE

TYPICAL
VITAL AC TRACK RELAY CIRCUIT CONFIGURATIONS

SCALE

DRAWING NO. ST-ATC-IC-034

SHEET NO.

UNIVERSAL CROSSOVER

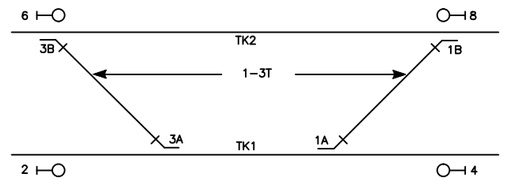

DIAMOND CROSSOVER

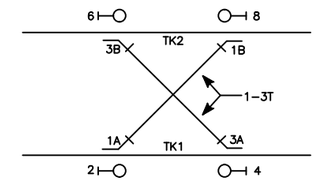

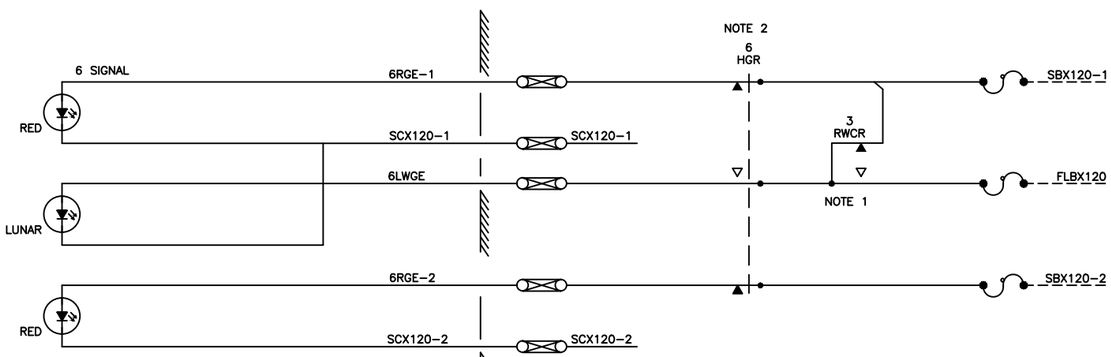

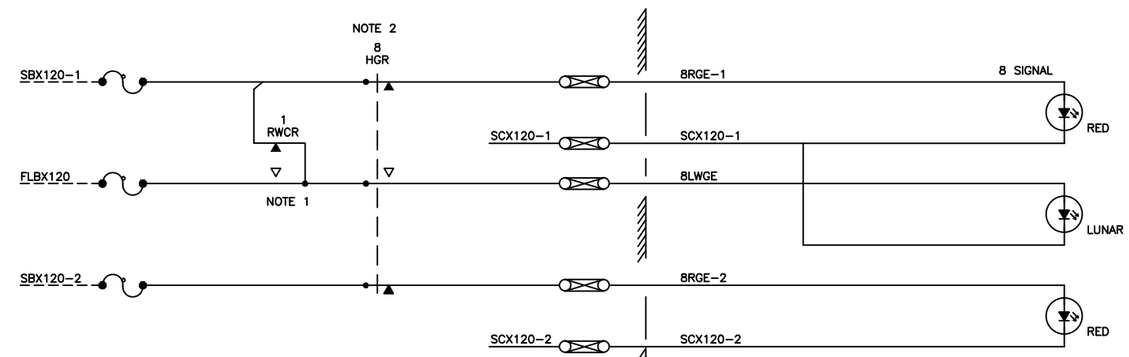

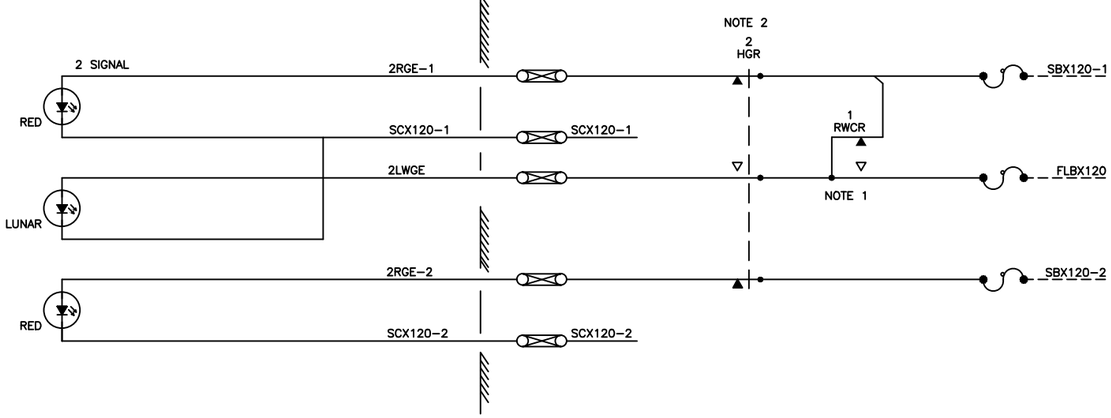

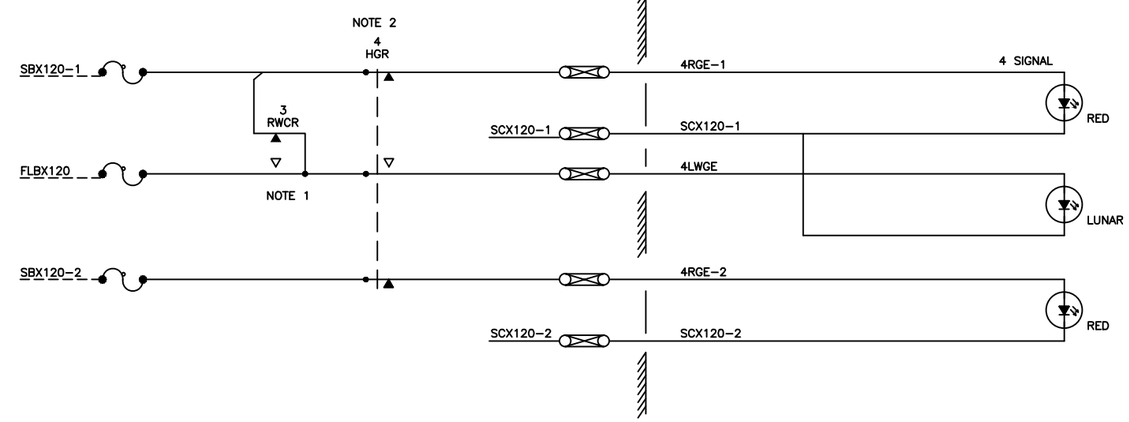

NOTES:

1. THE CONTRACTOR SHALL USE CONTACTS ON EITHER VITAL SWITCH REPEATER OR VITAL SWITCH CORRESPONDENCE RELAYS TO DETERMINE WHETHER THE LUNAR WHITE ASPECT IS FLASHING OR STEADY, BUT THE SAME TYPE OF RELAY (WPR OR WCR) SHALL BE USED EXCLUSIVELY THROUGHOUT THE CONTRACT AREA FOR THIS PURPOSE.
2. THE RELAY CONTACTS OF THE HGR RELAYS AND REPEATERS USED FOR SIGNAL LIGHTING SHALL BE RATED FOR A MINIMUM OF 150VAC OPERATION AT TWO (2) AMPS.

This Drawing Reflects a WMATA standard design approach. Project specific drawings must be developed by the Contractor which reflect this Design Philosophy

DESIGNED	GAH	02/2000 DATE
DRAWN	JMR	02/2000 DATE
CHECKED		DATE
APPROVED		DATE

REFERENCE DRAWINGS

NUMBER	DESCRIPTION

REVISIONS

DATE	BY	DESCRIPTION
08/2001	SYSP	REVISED AND ISSUED BY THE AUTHORITY
11/03/2016	MM	REVISED FOR FQ15192

WASHINGTON METROPOLITAN TRANSIT AUTHORITY

DEPARTMENT OF TRANSIT INFRASTRUCTURE AND ENGINEERING SERVICES
OFFICE OF THE CHIEF ENGINEER, INFRASTRUCTURE

SUBMITTED _____ DATE

APPROVED CHIEF ENGINEER _____ DATE

TYPICAL SIGNAL LIGHTING CIRCUITS

SCALE

DRAWING NO. ST-ATC-IC-035

SHEET NO.

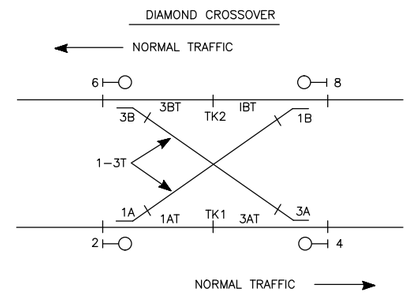

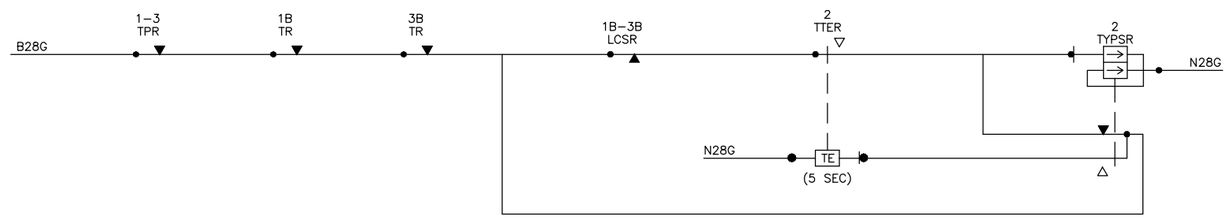

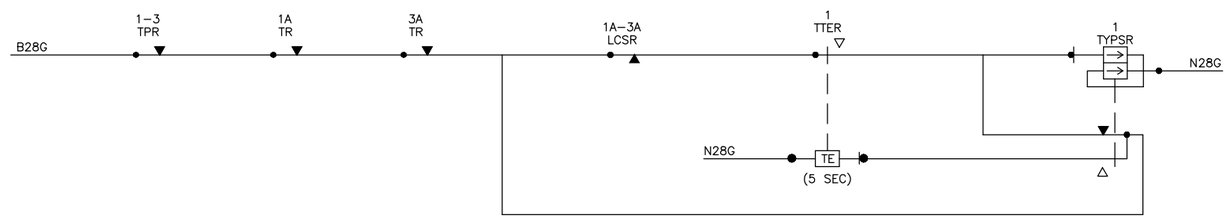

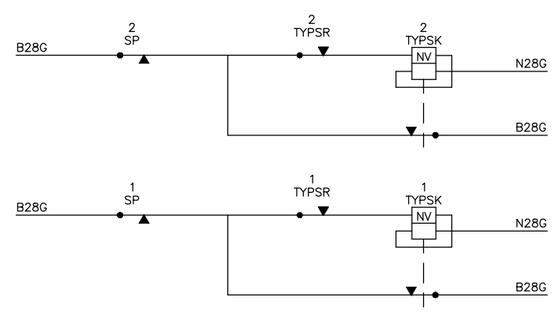

This Drawing Reflects a WMATA standard design approach. Project specific drawings must be developed by the Contractor which reflect this Design Philosophy

FOR AUDIO FREQUENCY TRACK CIRCUITS
SEE STANDARD DRAWING:
ST-ATC-IC-037

DESIGNED	ACC	11/04/16 DATE
DRAWN	DMR	11/04/16 DATE
CHECKED		DATE
APPROVED		DATE

REFERENCE DRAWINGS

NUMBER	DESCRIPTION

REVISIONS

DATE	BY	DESCRIPTION
11/03/16	MM	REVISED FOR FQ15192

WASHINGTON METROPOLITAN TRANSIT AUTHORITY

DEPARTMENT OF TRANSIT INFRASTRUCTURE AND ENGINEERING SERVICES
OFFICE OF THE CHIEF ENGINEER, INFRASTRUCTURE

SUBMITTED DATE

APPROVED CHIEF ENGINEER DATE

TYPICAL DETECTOR TRACK REPEATER CIRCUITS
(POWER FREQUENCY)

SCALE

DRAWING NO. ST-ATC-IC-038

SHEET NO.

NOTES:

1. AN ELECTRONIC FLASHER MAY BE USED. HOWEVER A VOLTAGE TOLERANCE OF NO MORE THAN 5 VOLTS TOTAL VARIATION SHALL BE MAINTAINED ON LIGHTS THAT ARE FLASHED.

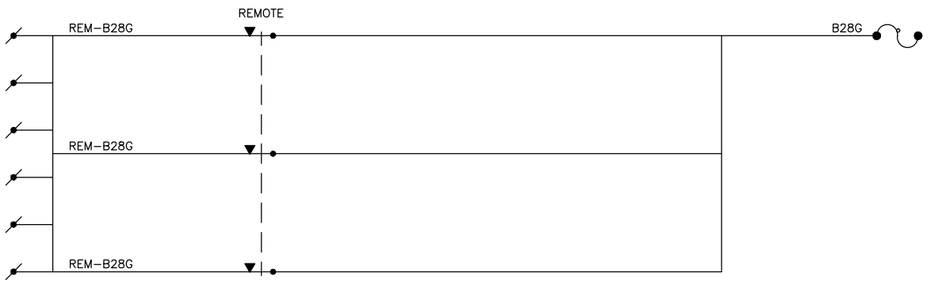

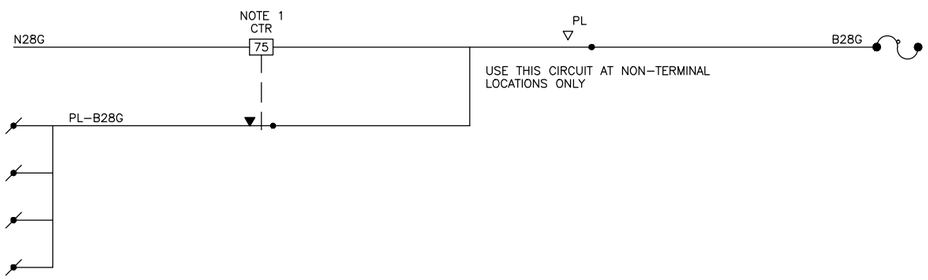

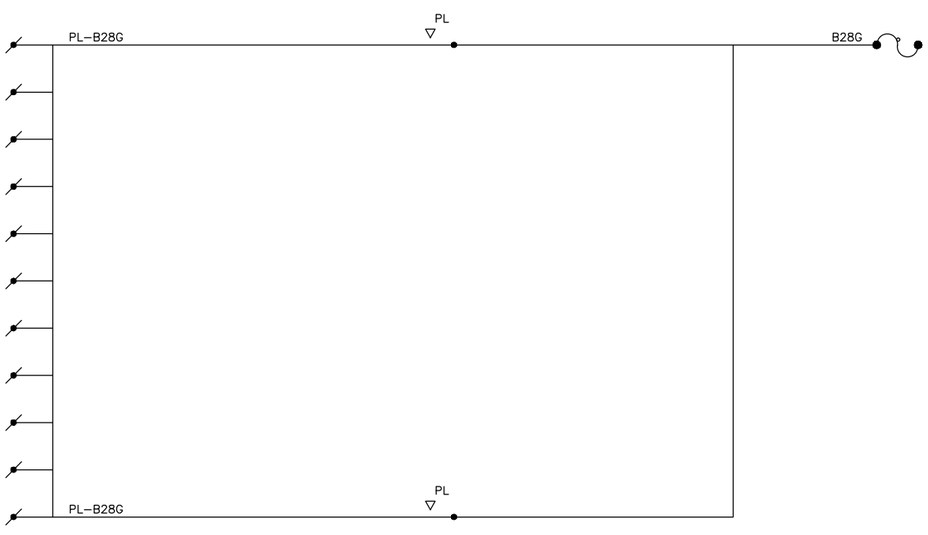

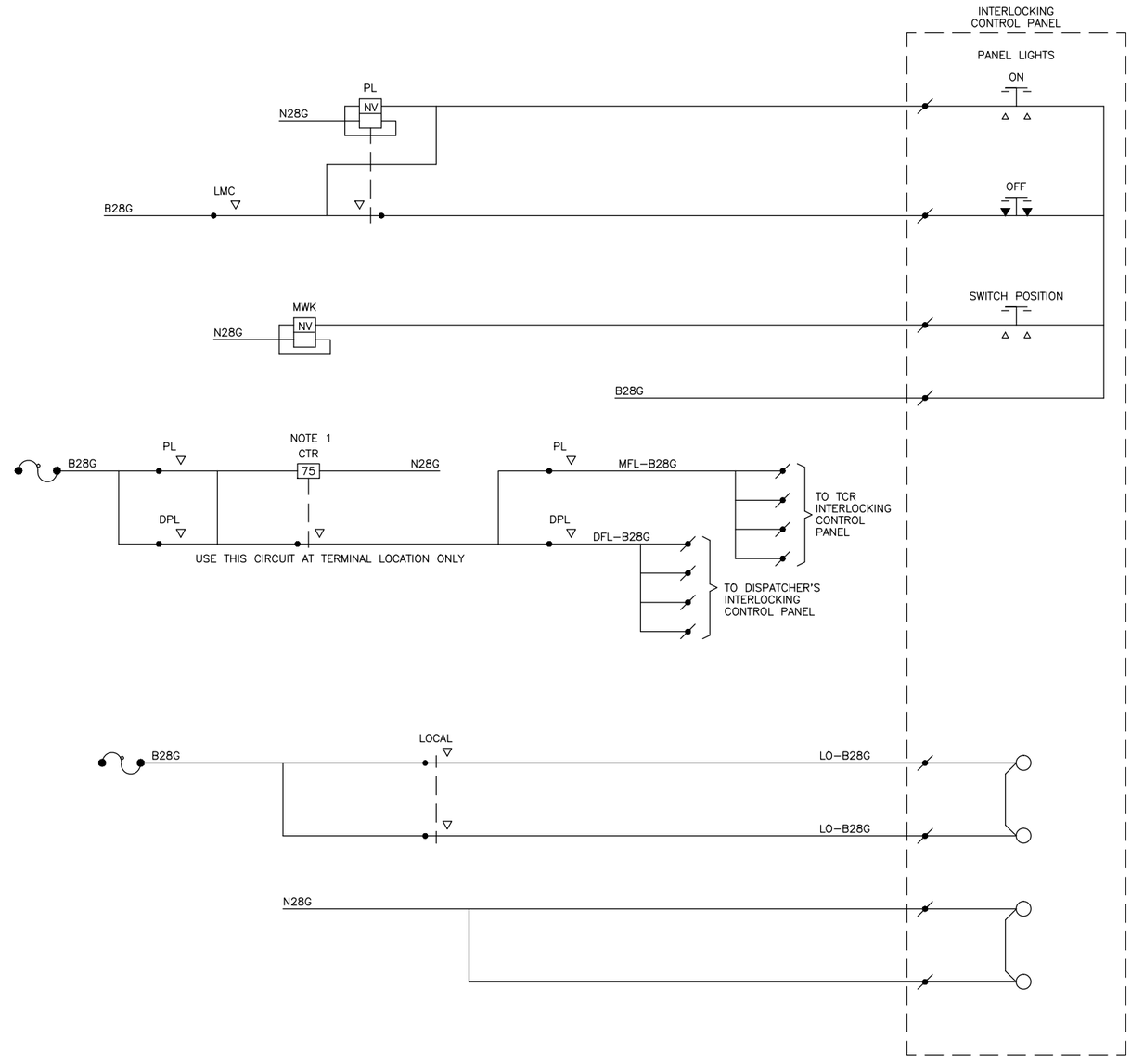

This Drawing Reflects a WMATA standard design approach. Project specific drawings must be developed by the Contractor which reflect this Design Philosophy

DESIGNED	GAH	2–00 DATE
DRAWN	JMR	2–00 DATE
CHECKED		DATE
APPROVED		DATE
UPDATED		DATE

REFERENCE DRAWINGS

NUMBER	DESCRIPTION

REVISIONS

DATE	BY	DESCRIPTION
08/2001	SYSP	Revised and issued by the Authority

WASHINGTON METROPOLITAN AREA TRANSIT AUTHORITY

DEPARTMENT OF TRANSIT SYSTEM DEVELOPMENT
OFFICE OF SYSTEMS

SUBMITTED _____ DATE

APPROVED DIRECTOR _____ May 3, 2001 DATE

TYPICAL LOCAL, REMOTE, PANEL & FLASHING B28G ENERGY DISTRIBUTION

SCALE NONE

DRAWING NO. ST–ATC–IC–043

NOTES:

1. DWG. NO. CROSS REFERENCE SHALL BE SHOWN ON CONTRACTOR'S RTU CONTROL CIRCUIT DRAWINGS.

UNIVERSAL CROSSOVER

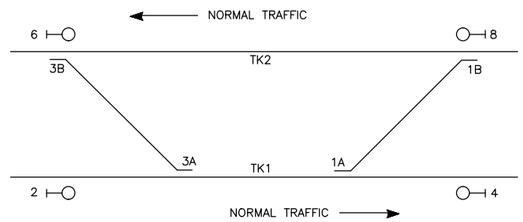

DIAMOND CROSSOVER

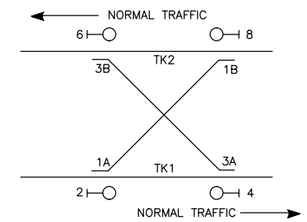

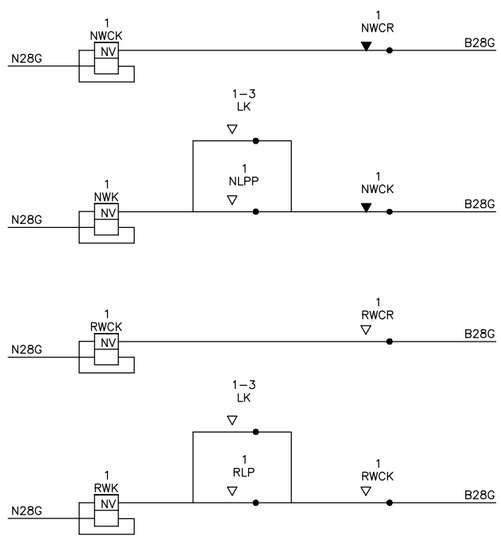

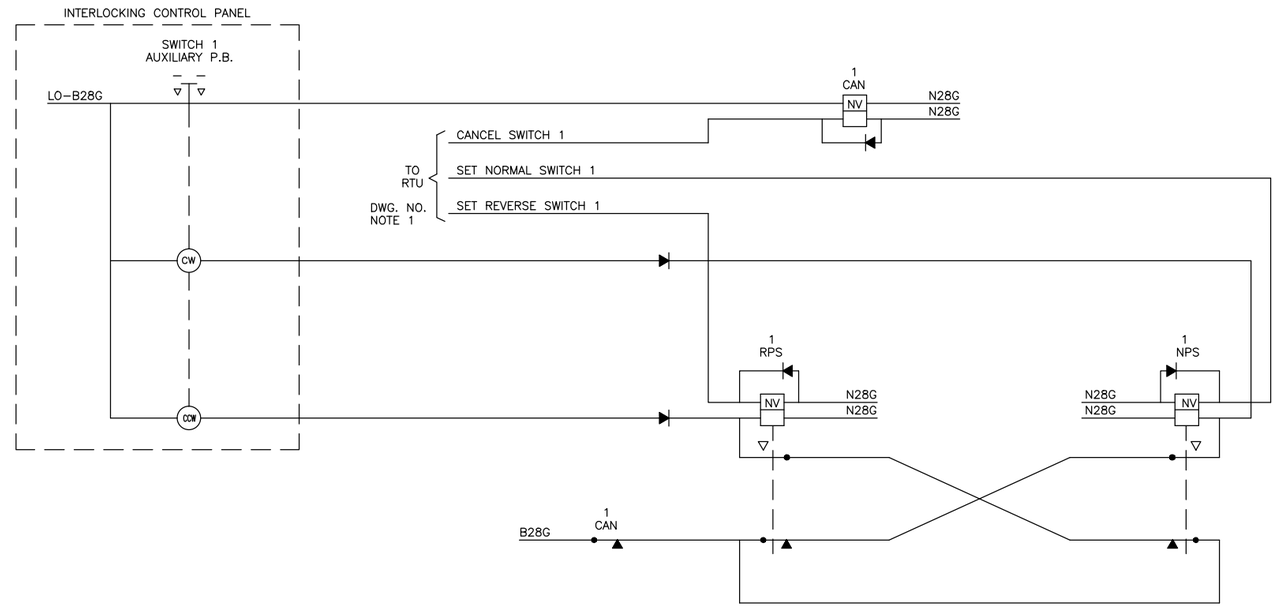

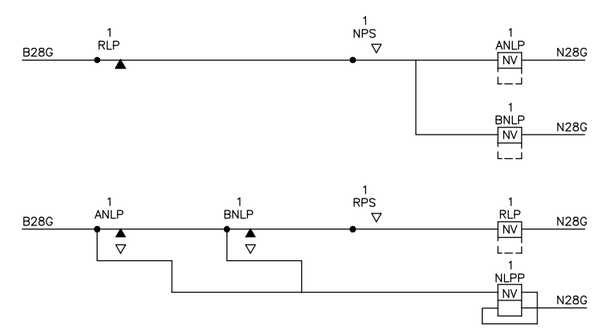

This Drawing Reflects a WMATA standard design approach. Project specific drawings must be developed by the Contractor which reflect this Design Philosophy

DESIGNED	GAH	2–00 DATE
DRAWN	JMR	2–00 DATE
CHECKED		DATE
APPROVED		DATE
UPDATED		DATE

REFERENCE DRAWINGS

NUMBER	DESCRIPTION

REVISIONS

DATE	BY	DESCRIPTION
08/2001	SYSP	Revised and issued by the Authority

WASHINGTON METROPOLITAN AREA TRANSIT AUTHORITY

DEPARTMENT OF TRANSIT SYSTEM DEVELOPMENT
OFFICE OF SYSTEMS

SUBMITTED _____ DATE

APPROVED _____ DIRECTOR May 3, 2001 DATE

TYPICAL AUXILIARY SWITCH PUSHBUTTON AND SWITCH POSITION INDICATION CIRCUITS

SCALE NONE

DRAWING NO. ST–ATC–IC–044

NOTES:

1. DWG. NO. CROSS REFERENCE SHALL BE SHOWN ON CONTRACTOR'S RTU CONTROL CIRCUIT DRAWINGS.

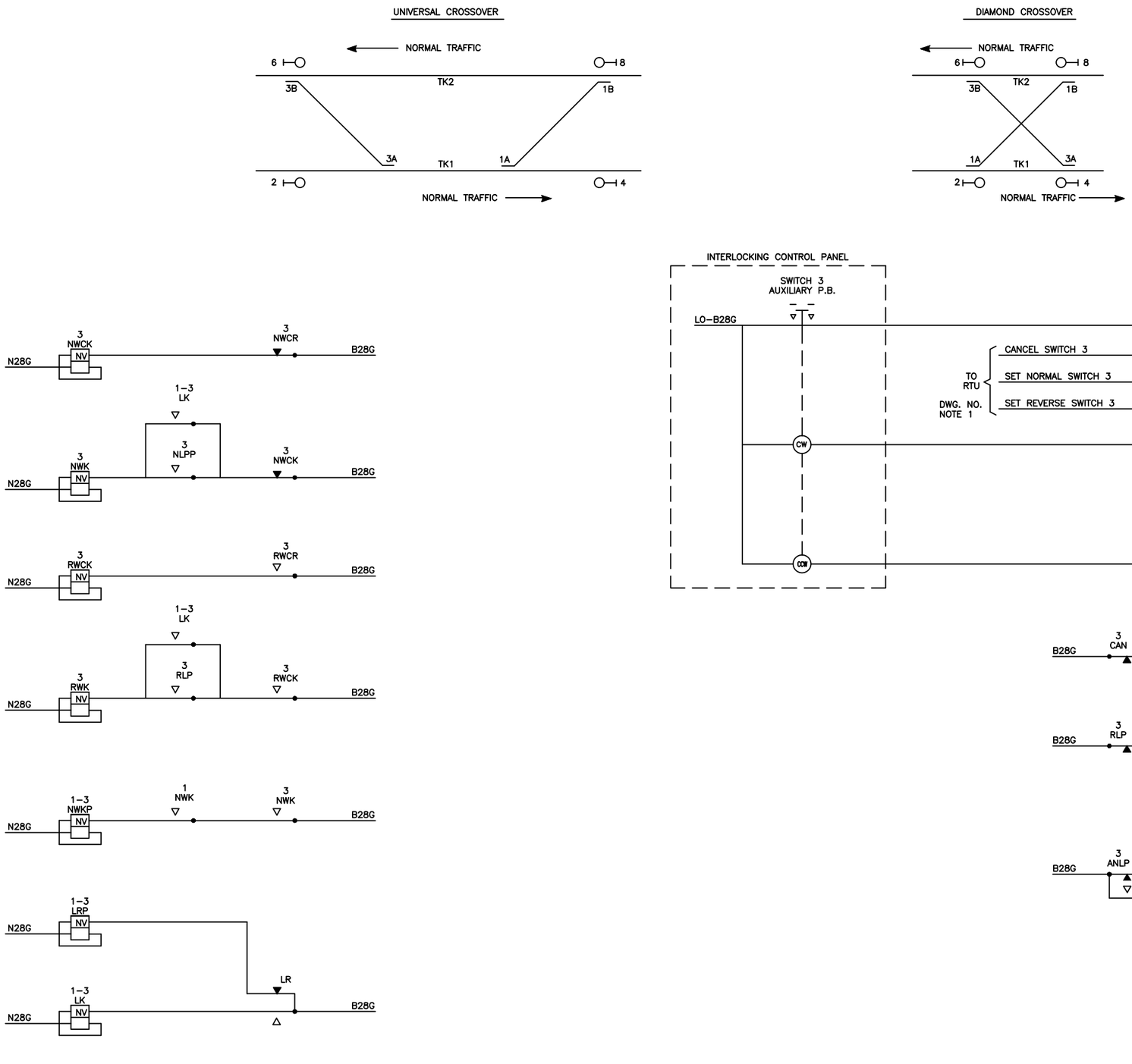

This Drawing Reflects a WMATA standard design approach. Project specific drawings must be developed by the Contractor which reflect this Design Philosophy

DESIGNED	GAH	2-00 DATE
DRAWN	JMR	2-00 DATE
CHECKED		DATE
APPROVED		DATE
UPDATED		DATE

REFERENCE DRAWINGS

NUMBER	DESCRIPTION

REVISIONS

DATE	BY	DESCRIPTION
08/2001	SYSP	Revised and issued by the Authority

WASHINGTON METROPOLITAN AREA TRANSIT AUTHORITY

DEPARTMENT OF TRANSIT SYSTEM DEVELOPMENT
OFFICE OF SYSTEMS

SUBMITTED _____ DATE

APPROVED _____ DIRECTOR — May 3, 2001 DATE

TYPICAL AUXILIARY SWITCH PUSHBUTTON AND SWITCH POSITION INDICATION CIRCUITS (SWITCH 3)

SCALE: NONE

DRAWING NO. ST-ATC-IC-045

NOTES:

1. ADDITIONAL CIRCUITRY (NOT SHOWN) SHALL BE ADDED BY THE CONTRACTOR TO MEET THE "INDICATION TEST" REQUIREMENTS FOR EACH LED PANEL INDICATOR LIGHT. SEE ARTICLE 3.5.27, INTERLOCKING CONTROL PANELS.
2. TRACK CIRCUITS WHICH SHALL BE INDICATED ARE SHOWN ON THE ROUTE CHARTS.
3. WHERE APPLICABLE, ADDITIONAL INDICATORS AND CIRCUITS SHALL BE ADDED FOR SNOWMELTER FAILURE INDICATION. SEE DWG. ST-ATC-PWR-007 AND SECTION 34-42-70, SNOWMELTER LAYOUTS.

This Drawing Reflects a WMATA standard design approach. Project specific drawings must be developed by the Contractor which reflect this Design Philosophy

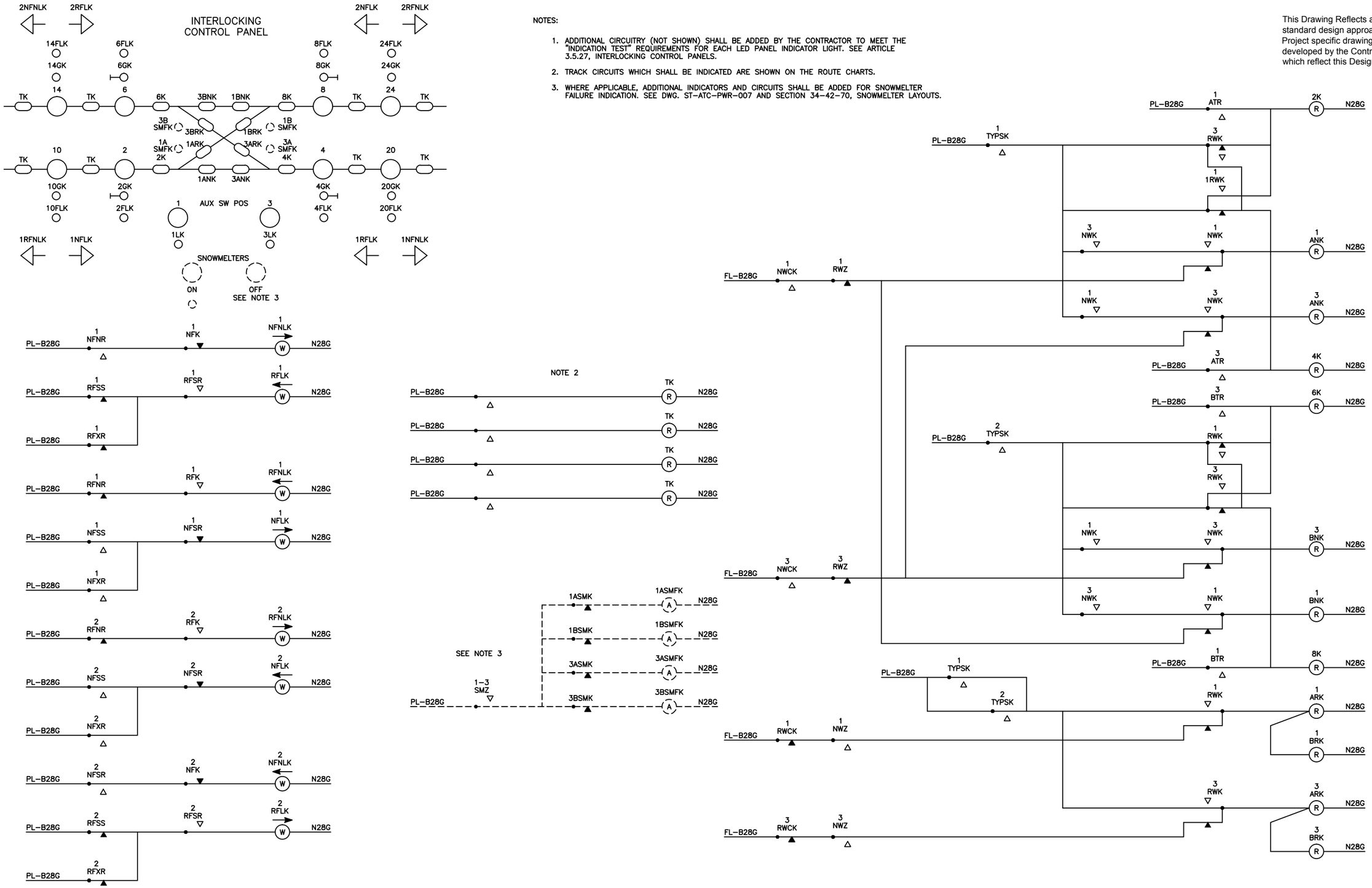

DESIGNED	GAH	2-00 DATE
DRAWN	JMR	2-00 DATE
CHECKED		DATE
APPROVED		DATE
UPDATED		DATE

REFERENCE DRAWINGS

NUMBER	DESCRIPTION

REVISIONS

DATE	BY	DESCRIPTION
08/2001	SYSP	Revised and issued by the Authority
3/30/17	MM	REVISED FOR FQ15192

WASHINGTON METROPOLITAN AREA TRANSIT AUTHORITY

DEPARTMENT OF TRANSIT SYSTEM DEVELOPMENT
OFFICE OF SYSTEMS

SUBMITTED _____ DATE

APPROVED _____ DIRECTOR May 3, 2001 DATE

TYPICAL INTERLOCKING CONTROL PANEL INDICATION CIRCUITS, TRACK OCCUPANCY AND TRAFFIC

SCALE: NONE

DRAWING NO. ST-ATC-IC-046

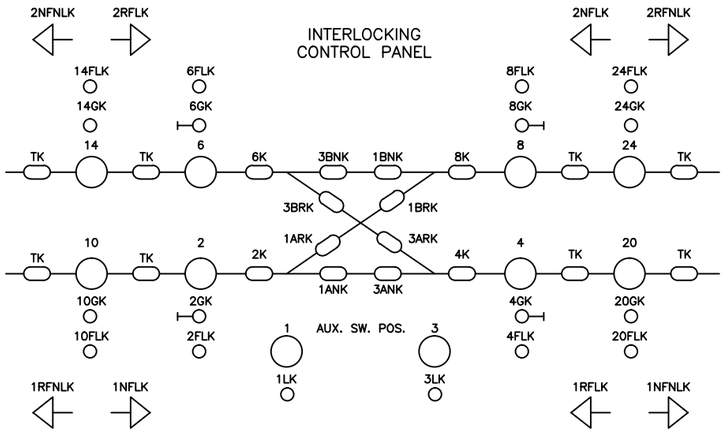

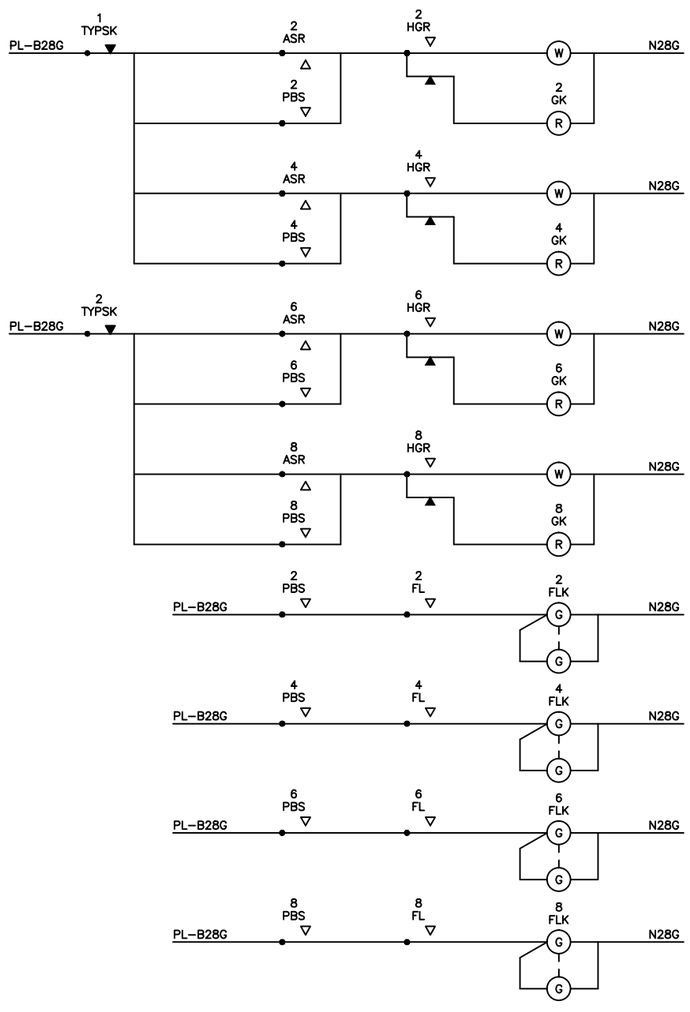

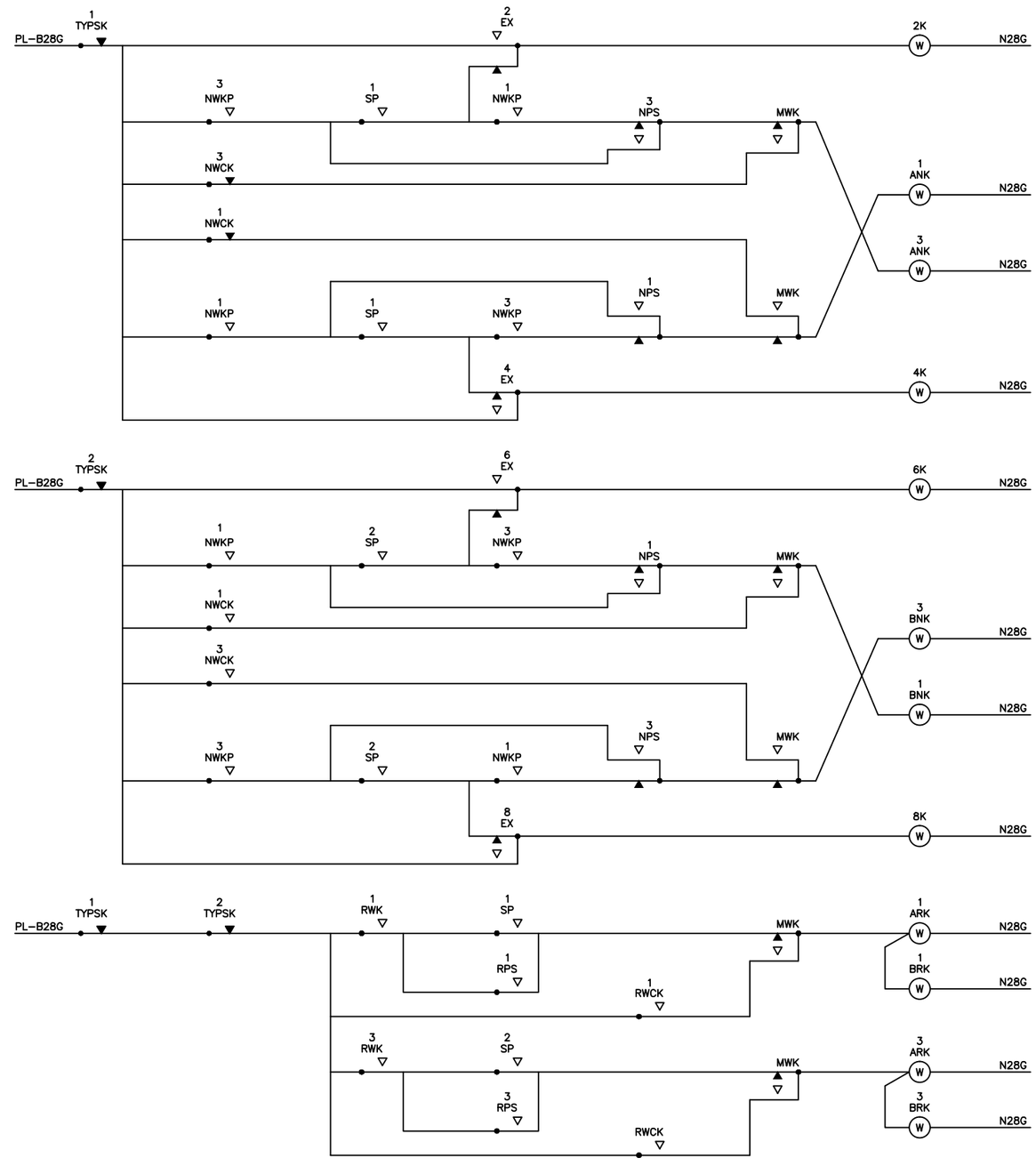

NOTES:

1. ADDITIONAL CIRCUITRY (NOT SHOWN) SHALL BE ADDED BY THE CONTRACTOR TO MEET THE "INDICATION TEST" REQUIREMENTS FOR EACH LED PANEL INDICATOR LIGHT. SEE SECTION 16956, INTERLOCKING CONTROL PANELS.

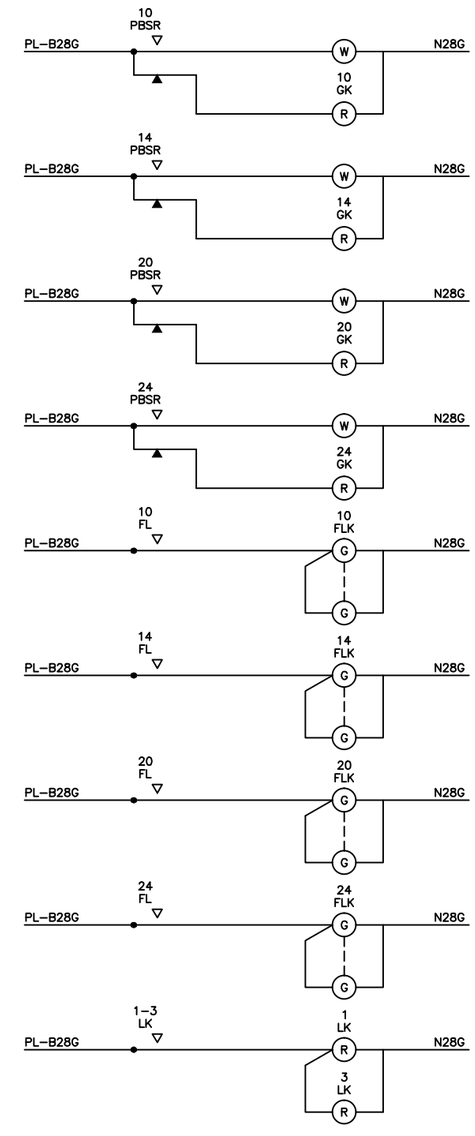

DESIGNED		DATE
DRAWN	JMR	2–00 DATE
CHECKED		DATE
APPROVED		DATE
UPDATED		DATE

REFERENCE DRAWINGS

NUMBER	DESCRIPTION

REVISIONS

DATE	BY	DESCRIPTION
08/2001	SYSP	Revised and issued by the Authority

WASHINGTON METROPOLITAN AREA TRANSIT AUTHORITY

DEPARTMENT OF TRANSIT SYSTEM DEVELOPMENT
OFFICE OF SYSTEMS

SUBMITTED _____ DATE

APPROVED DIRECTOR _____ May 3, 2001 DATE

TYPICAL INTELOCKING CONTROL PANEL
INDICATION CIRCUITS, SIGNAL FLEETING & ROUTE

SCALE: NONE

DRAWING NO. ST–ATC–IC–047

TYPICAL SNOWMELTER CONTROL CASE

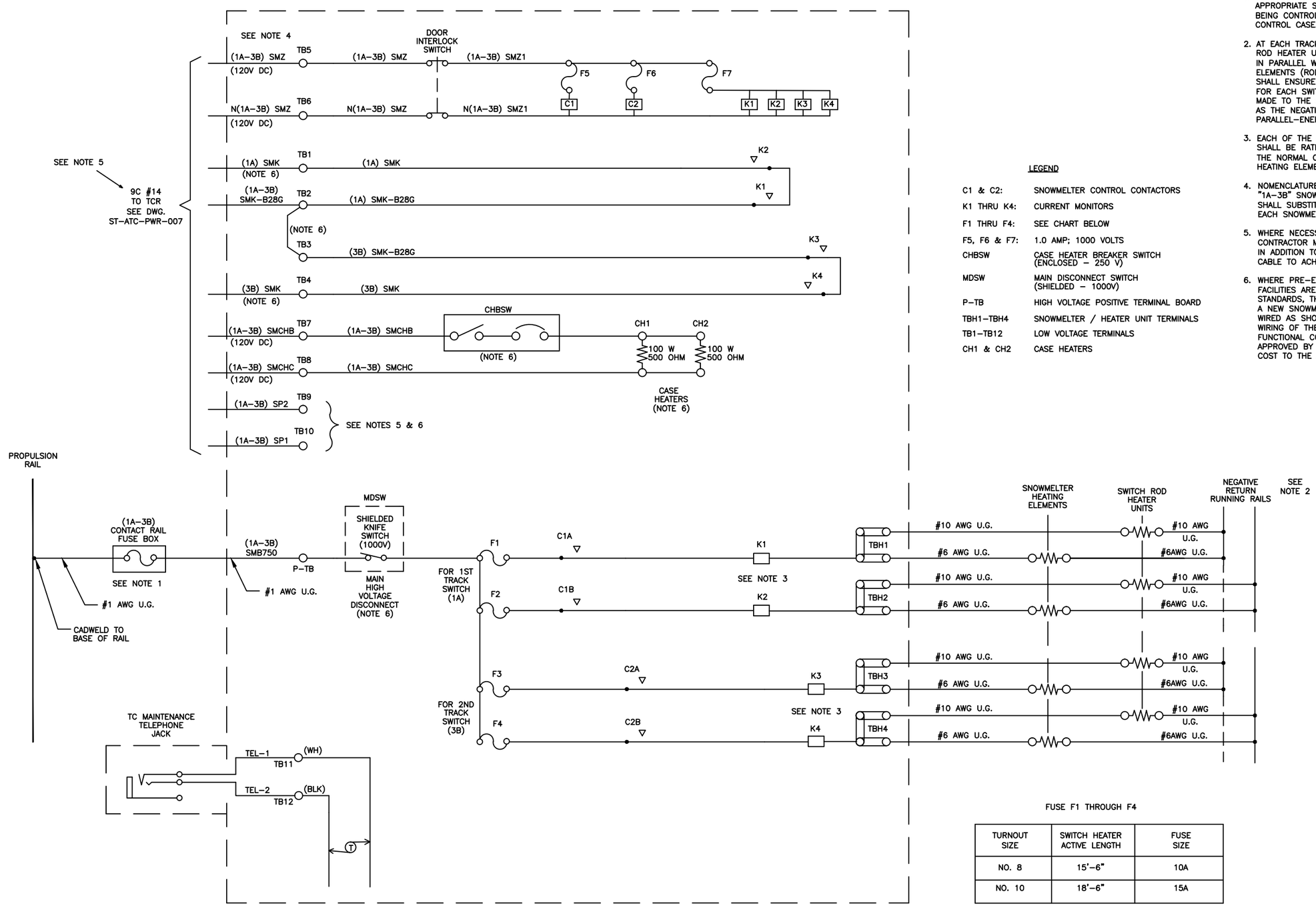

NOTES:

1. CONTRACTOR SHALL PROVIDE FUSE BOX AND FUSE OF APPROPRIATE SIZE FOR THE SNOWMELTER EQUIPMENT BEING CONTROLLED FROM EACH INDIVIDUAL SNOWMELTER CONTROL CASE. SEE SECTION 16969.
2. AT EACH TRACK SWITCH, EACH OF THE TWO SWITCH ROD HEATER UNITS (CRIB HEATERS) SHALL BE ENERGIZED IN PARALLEL WITH ONE OF THE TWO SNOWMELTER HEATING ELEMENTS (ROD–TYPE RAIL HEATERS). THE CONTRACTOR SHALL ENSURE THAT THE NEGATIVE RETURN CONNECTION FOR EACH SWITCH ROD HEATER UNIT (CRIB HEATER) IS MADE TO THE SAME NEGATIVE RETURN (RUNNING) RAIL AS THE NEGATIVE–RETURN–RAIL CONNECTION FOR ITS PARALLEL–ENERGIZED SNOWMELTER HEATING ELEMENT.
3. EACH OF THE CURRENT MONITORS (K1 THROUGH K4) SHALL BE RATED TO DROP WHEN ITS CURRENT FALLS BELOW THE NORMAL OPERATING CURRENT OF ITS SNOWMELTER HEATING ELEMENT COMBINATION.
4. NOMENCLATURE SHOWN IN PARENTHESES IS SPECIFIC FOR A "1A–3B" SNOWMELTER CONTROL CASE ONLY. THE CONTRACTOR SHALL SUBSTITUTE APPROPRIATE SIMILAR NOMENCLATURE FOR EACH SNOWMELTER CASE INSTALLED.
5. WHERE NECESSARY TO UPGRADE PRE–EXISTING LOCATION(S), THE CONTRACTOR MAY PROVIDE NEW 2–CONDUCTOR #14 CABLE(S) IN ADDITION TO THE PREVIOUSLY INSTALLED SM CONTROL CABLE TO ACHIEVE THE REQUIRED NINE CONDUCTORS.
6. WHERE PRE–EXISTING SNOWMELTER CONTROL AND INDICATION FACILITIES ARE TO BE UPGRADED TO CURRENT AUTHORITY STANDARDS, THE CONTRACTOR SHALL EITHER PROVIDE A NEW SNOWMELTER CONTROL CASE EQUIPPED AND WIRED AS SHOWN, OR REVISE THE EQUIPMENT AND WIRING OF THE PRE–EXISTING SNOWMELTER LAYOUT TO THE FUNCTIONAL CONFIGURATION SHOWN IN A MANNER PREVIOUSLY APPROVED BY THE ENGINEER, AT NO ADDITIONAL COST TO THE AUTHORITY.

LEGEND

C1 & C2:	SNOWMELTER CONTROL CONTACTORS
K1 THRU K4:	CURRENT MONITORS
F1 THRU F4:	SEE CHART BELOW
F5, F6 & F7:	1.0 AMP; 1000 VOLTS
CHBSW	CASE HEATER BREAKER SWITCH (ENCLOSED – 250 V)
MDSW	MAIN DISCONNECT SWITCH (SHIELDED – 1000V)
P–TB	HIGH VOLTAGE POSITIVE TERMINAL BOARD
TBH1–TBH4	SNOWMELTER / HEATER UNIT TERMINALS
TB1–TB12	LOW VOLTAGE TERMINALS
CH1 & CH2	CASE HEATERS

FUSE F1 THROUGH F4

TURNOUT SIZE	SWITCH HEATER ACTIVE LENGTH	FUSE SIZE
NO. 8	15'–6"	10A
NO. 10	18'–6"	15A

This Drawing Reflects a WMATA standard design approach. Project specific drawings must be developed by the Contractor which reflect this Design Philosophy

DESIGNED	GAH	6–00 DATE
DRAWN	JMR	6–00 DATE
CHECKED		DATE
APPROVED		DATE
UPDATED		DATE

REFERENCE DRAWINGS

NUMBER	DESCRIPTION

REVISIONS

DATE	BY	DESCRIPTION
08/2001	SYSP	Revised and issued by the Authority

WASHINGTON METROPOLITAN AREA TRANSIT AUTHORITY

DEPARTMENT OF TRANSIT SYSTEM DEVELOPMENT
OFFICE OF SYSTEMS

SUBMITTED DATE

APPROVED DIRECTOR May 3, 2001 DATE

TYPICAL SNOWMELTER CONTROL CASE CIRCUITS

SCALE NONE

DRAWING NO. ST–ATC–IC–048

WMATA

TYPICAL EQUIPMENT LAYOUT

BOOK OF PLANS

DESIGNED	GAH	2-00 DATE
DRAWN	JMR	2-00 DATE
CHECKED		DATE
APPROVED		DATE
UPDATED		DATE

REFERENCE DRAWINGS

NUMBER	DESCRIPTION

REVISIONS

DATE	BY	DESCRIPTION
08/2001	SYSP	Revised and issued by the Authority

WASHINGTON METROPOLITAN AREA TRANSIT AUTHORITY

DEPARTMENT OF TRANSIT SYSTEM DEVELOPMENT
OFFICE OF SYSTEMS

SUBMITTED _____ DATE

APPROVED _____ DIRECTOR — May 3, 2001 DATE

TYPICAL EQUIPMENT LAYOUTS

SCALE: NONE

DRAWING NO. ST-ATC-IEQ-000

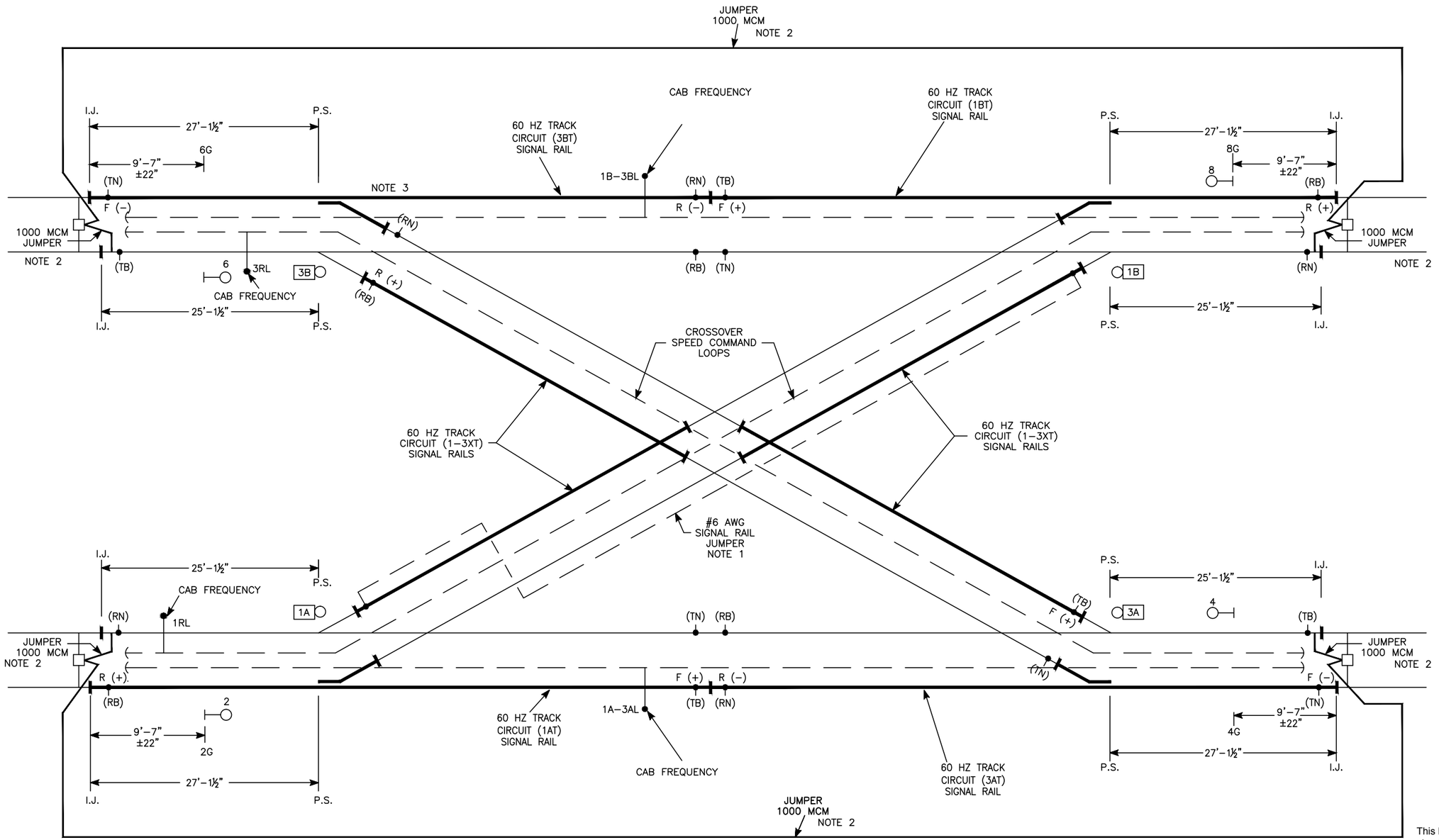

This Drawing Reflects a WMATA standard design approach. Project specific drawings must be developed by the Contractor which reflect this Design Philosophy

NOTES:

1. #6 AWG SIGNAL JUMPER RAIL SHALL BE ROUTED IN CONDUIT.
2. REFER TO STANDARD DRAWING ST-ATC-GEN-010 FOR DETAILS.
3. THE CONTRACTOR SHALL MAKE THESE CONNECTIONS AT THE END OF THE CROSSOVER TRACK CIRCUIT FARTHEST AWAY FROM THE NEAREST CONVENTIONAL OR SPECIAL CROSS BONDING BETWEEN THE MAINLINE TRACKS.
4. THE CONTRACTOR SHALL MAKE ALL TRACK CIRCUITS CONNECTIONS FOR THE POWER FREQUENCY TRACK CIRCUITS AS CLOSE TO THE INSULATED JOINTS AS POSSIBLE.

FOR AUDIO FREQUENCY TRACK CIRCUITS
SEE STANDARD DRAWING
ST-ATC-IEQ-002

DESIGNED	MEP	11/2016 DATE
DRAWN	ACC	11/2016 DATE
CHECKED		DATE
APPROVED		DATE

REFERENCE DRAWINGS

NUMBER	DESCRIPTION

REVISIONS

DATE	BY	DESCRIPTION
04-21-17	MM	CREATED FOR FQ16146

WASHINGTON METROPOLITAN TRANSIT AUTHORITY

DEPARTMENT OF TRANSIT INFRASTRUCTURE AND ENGINEERING SERVICES
OFFICE OF THE CHIEF ENGINEER, INFRASTRUCTURE

SUBMITTED _____ DATE

APPROVED _____ CHIEF ENGINEER DATE

TYPICAL INTERLOCKING CONFIGURATION
(POWER FREQUENCY)

SCALE

DRAWING NO. ST-ATC-IEQ-003

SHEET NO.

This Drawing Reflects a WMATA standard design approach. Project specific drawings must be developed by the Contractor which reflect this Design Philosophy

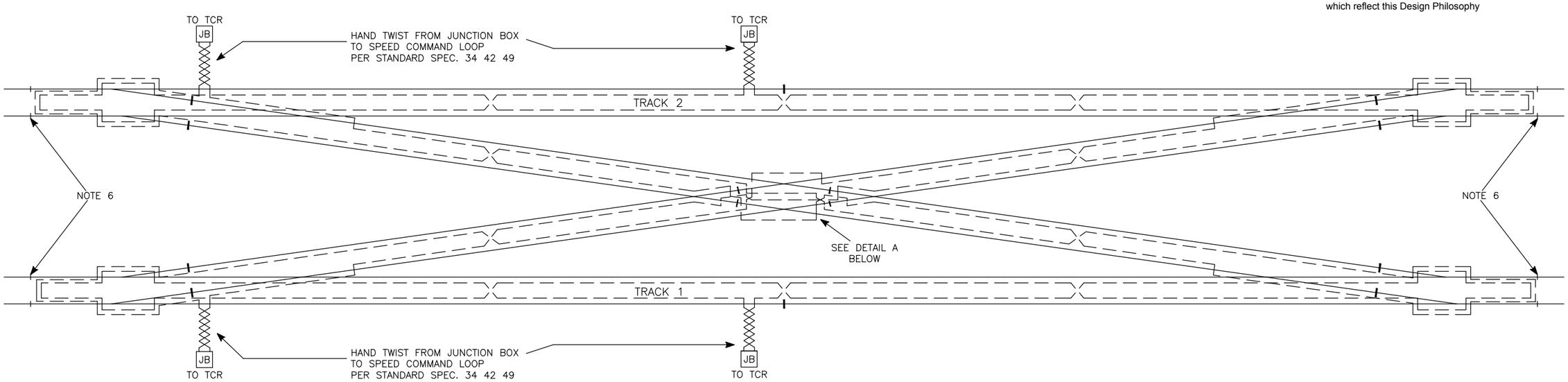

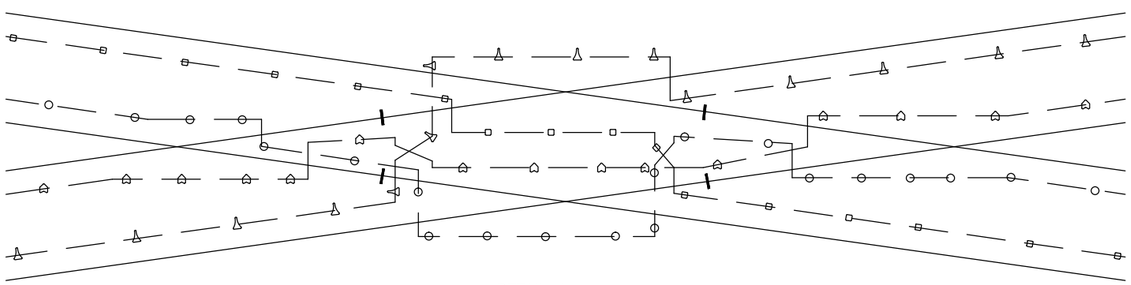

DETAIL A

NOTES:

1. LOOP WIRE SHALL BE SIZE No. 10 AWG FLEX INSTALLED IN PROTECTIVE CONDUIT / HOSE.
2. CONDUIT / HOSE SHALL BE CLAMPED TO THE CENTER OF THE WEB OF RAIL WHERE POSSIBLE.
3. CONDUIT / HOSE SHALL BE SECURED TO TIES OR CONCRETE SLAB, AS APPLICABLE FOR TRANSPOSITIONS.
4. FOR LOOPS UNDER 150': ONE TRANSPOSITION. FOR LOOPS OVER 150': ODD NUMBER OF TRANSPOSITIONS, APPROXIMATELY ONE EVERY 75'.
5. THE CONTRACTOR SHALL SUBMIT DETAILED DRAWINGS FOR THE INSTALLATION OF LONG WIRE LOOP LAYOUTS. INSTALLATION OF THESE LOOPS SHALL BE IN CONFORMANCE WITH THE APPROVED VERSIONS OF THE SUBMITTED DRAWINGS.
6. LONG WIRE LOOPS MUST NOT EXTEND BEYOND THE INSULATED JOINTS THAT DEFINE BOUNDARIES OF THE INTERLOCKING.
7. THE CONTRACTOR SHALL USE STAINLESS STEEL TIE WRAPS TO SECURE CONDUIT / HOSE LOOP IN AREAS WHERE CLAMPS ARE NOT PRACTICABLE, NYLON TIE–WRAPS ARE UNACCEPTABLE.

FOR AUDIO FREQUENCY TRACK CIRCUITS
SEE STANDARD DRAWING
ST-ATC-IEQ-006

DESIGNED	GAH	09/2000 DATE
DRAWN	JMR	02/2000 DATE
CHECKED		DATE
APPROVED	...	DATE

REFERENCE DRAWINGS

NUMBER	DESCRIPTION

REVISIONS

DATE	BY	DESCRIPTION
11/03/2016	MM	UPDATED FOR FQ15192

WASHINGTON METROPOLITAN TRANSIT AUTHORITY

DEPARTMENT OF TRANSIT INFRASTRUCTURE AND ENGINEERING SERVICES
OFFICE OF THE CHIEF ENGINEER, INFRASTRUCTURE

SUBMITTED DATE

APPROVED CHIEF ENGINEER DATE

TYPICAL SPEED COMMAND
CROSSOVER LOOP LAYOUT
(POWER FREQUENCY)

SCALE

DRAWING NO. ST-ATC-IEQ-007

SHEET NO.

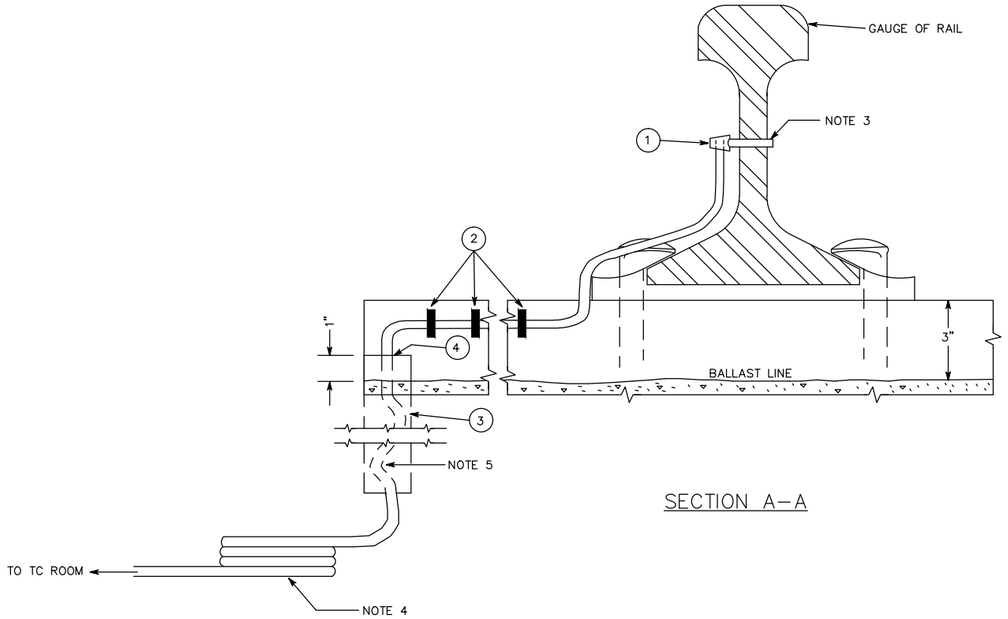

SECTION A–A

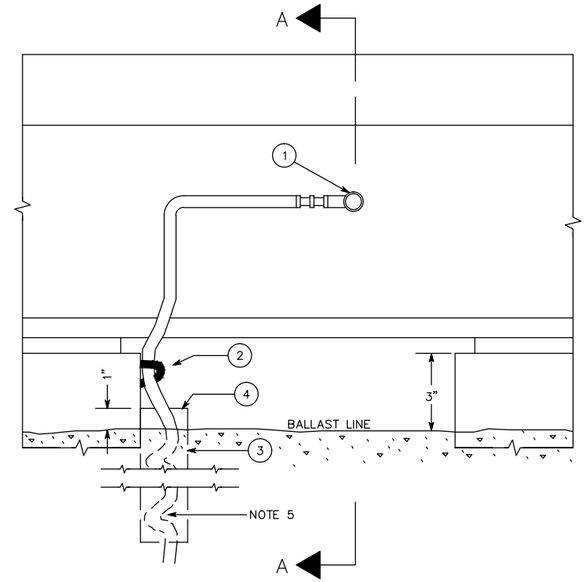

TYPICAL AC TRACK CIRCUIT CONNECTION

NOTES:

1. INSULATED JOINTS WILL BE FURNISHED AND INSTALLED BY OTHERS AT THE APPROXIMATE LOCATIONS SHOWN ON THE CONTRACT DRAWINGS.
2. INSTALL CONNECTOR AS CLOSE AS POSSIBLE TO INSULATED JOINT, BUT NOT MORE THAN 4" FROM END OF INSULATED JOINT AND WITHIN ± 3/16" OF THE NEUTRAL AXIS OF THE RAIL. CONNECTORS SHALL BE COATED WITH NO–OX–ID "E" GREASE.
3. 3/8" HOLE DRILLED IN RAIL FOR CONNECTOR. APPLY CONNECTOR SAME WORK DAY.
4. 5' CABLE SLACK IN 3 LOOPS, BURIED AT BOTTOM OF EXCAVATION.
5. 1 FT SLACK TO BE LEFT IN HOSE.
6. EQUIVALENT CONFIGURATION REQUIRED FOR "DIRECT FIXATION".
7. SEE SECTION 16949 FOR CONDUCTOR SIZE.

EQUIPMENT

1	CONNECTOR, UNITED STATES STEEL TYPE S–TNS
2	1–3/4" x 3/8" x 144 COPPER WELD STAPLES – 1" BELOW TOP OF TIE. (3 – MINIMUM)
3	CORDURA HOSE 1" I.D. 24" LONG
4	SEALING COMPOUND (PER SPECIFICATIONS)

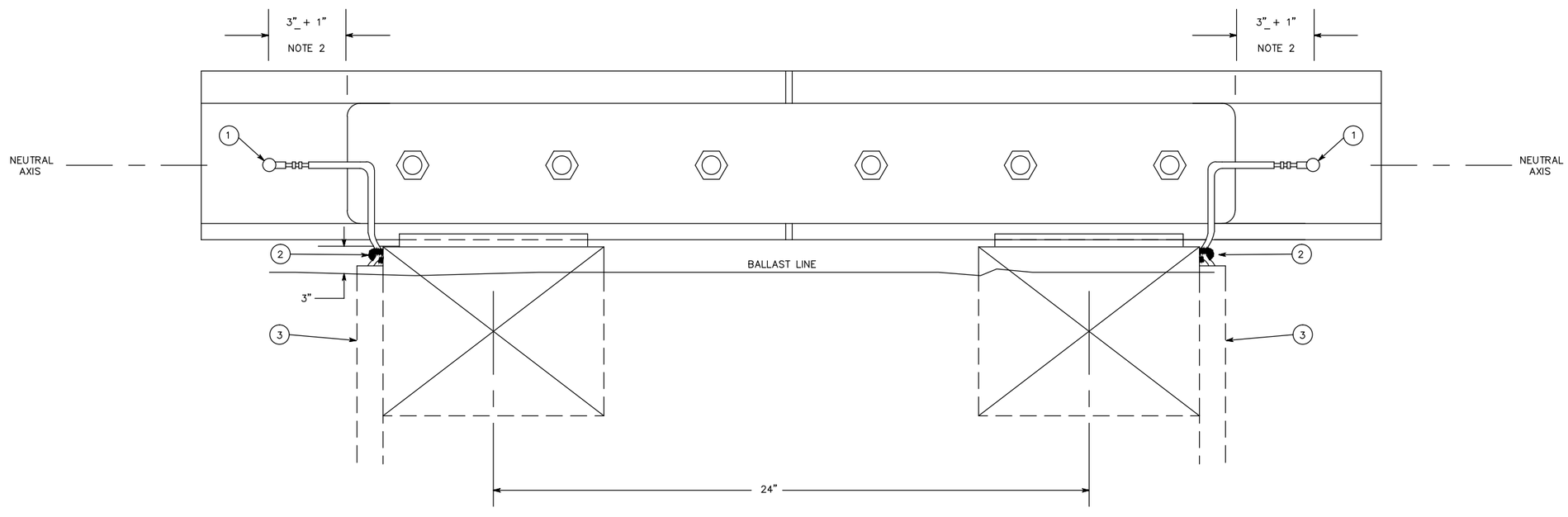

TYPICAL AC TRACK CIRCUIT CONNECTIONS AT AN INSULATED JOINT

This Drawing Reflects a WMATA standard design approach. Project specific drawings must be developed by the Contractor which reflect this Design Philosophy

DESIGNED	GAH	2–00 DATE
DRAWN	JMR	2–00 DATE
CHECKED		DATE
APPROVED		DATE
UPDATED		DATE

REFERENCE DRAWINGS

NUMBER	DESCRIPTION

REVISIONS

DATE	BY	DESCRIPTION
08/2001	SYSP	Revised and issued by the Authority

WASHINGTON METROPOLITAN AREA TRANSIT AUTHORITY

DEPARTMENT OF TRANSIT SYSTEM DEVELOPMENT
OFFICE OF SYSTEMS

SUBMITTED _____ DATE

APPROVED DIRECTOR May 3, 2001 DATE

TYPICAL AC TRACK CIRCUIT CONNECTIONS

SCALE NONE

DRAWING NO. ST–ATC–IEQ–008

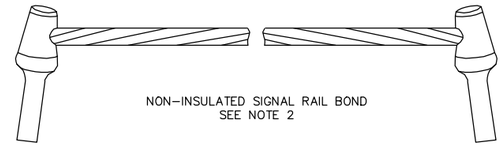

NON-INSULATED SIGNAL RAIL BOND
SEE NOTE 2

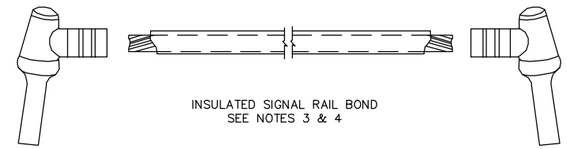

INSULATED SIGNAL RAIL BOND
SEE NOTES 3 & 4

SIGNAL RAIL BONDS

NOTES:

1. EQUIVALENT CONFIGURATION REQUIRED FOR "DIRECT FIXATION" TRACK.
2. SIGNAL BONDS: ERICO TYPE SBPAJB-"A", OR APPROVED EQUAL. (16 EXTRA GALVANIZED STEEL WIRES) AND 3 COPPER WIRES).
3. THE CONTRACTOR SHALL PROVIDE INSULATED SIGNAL RAIL BONDS WHEREVER NECESSARY TO PREVENT POSSIBLE CONTACT WITH THE CONCRETE INVERT, NEGATIVE-RETURN RAILS OR BONDS, OR TO PREVENT POSSIBLE "SHORT CIRCUITING" OF THE DESIRED MAXIMUM LENGTH SERIES PATH FOR THE SIGNAL RAIL CIRCUIT.
4. THE CONTRACTOR SHALL ASSEMBLE INSULATED SIGNAL RAIL BONDS OF THE APPROPRIATE LENGTH USING 2 TRACK CONNECTORS AND THE APPROPRIATE LENGTH OF INSULATED WIRE. THE INSULATED SIGNAL RAIL BONDS SHALL CLOSELY MATCH (AS PRACTICABLE) THE SIZE, COMPOSITION, AND GAUGE OF THE NON-INSULATED SIGNAL RAIL BOND.
5. THE CONTRACTOR SHALL PROVIDE DUAL SIGNAL-RAIL CROSS BONDS AT THE INSULATED JOINTS AS NOTED TO PROVIDE A BONDED SERIES PATH FOR THE SIGNAL RAIL CURRENT. SEE SECTION 34 42 65.
6. THE TRACKAGE DIAGRAM SHOWN REPRESENTS A TYPICAL NO. 8 DIAMOND CROSSOVER ON 14 FT. TRACK CENTERS AND THEREFORE ILLUSTRATES ONLY THE MINIMUM AMOUNT OF SIGNAL RAIL BONDING REQUIRED. THE CONTRACTOR SHALL PROVIDE THE SIGNAL RAIL BONDING SHOWN PLUS ANY ADDITIONAL SIGNAL RAIL BONDING NECESSARY TO BOND AROUND ADDITIONAL RAIL JOINTS INCLUDED IN CROSSOVERS OF LARGER SIZE OR ON WIDER TRACK CENTERS IN THE MANNER SPECIFIED IN SECTION 16968, ALL AT NO ADDITIONAL COST TO THE AUTHORITY.
7. THE CONTRACTOR SHALL USE PIN-TYPE SIGNAL RAIL BONDS OF THE TYPE SHOWN WHEREVER POSSIBLE. WHERE CLOSE CLEARANCES OR LACK OF SPACE PRECLUDES THE USE OF PIN-TYPE BONDS, CADWELDED RAILHEAD BONDS OF A TYPE PREVIOUSLY APPROVED BY THE ENGINEER MAY BE SUBSTITUTED.
8. CABLE SHALL BE FRE 1" CONDUIT

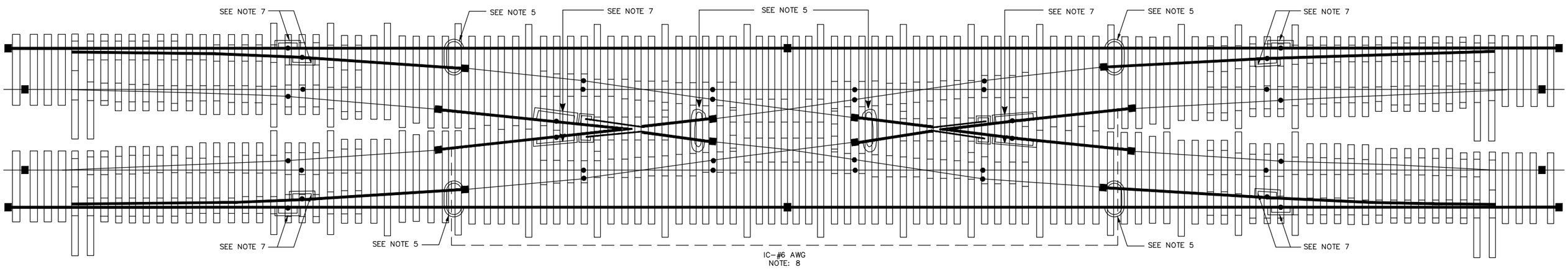

DIAMOND CROSSOVER

LEGEND

- RAIL JOINT, BY OTHERS
- INSULATED JOINT, BY OTHERS
- SIGNAL RAIL
- NEGATIVE RETURN RAIL
- BONDED SIGNAL RAIL JOINT (2 BONDS PER RAIL JOINT)
- BONDED SIGNAL RAIL TO SIGNAL WING RAIL AT SIGNAL RAIL FROG (4 SIGNAL BONDS PER FROG)
- NO. 6 AWG FLEX CABLE

This Drawing Reflects a WMATA standard design approach. Project specific drawings must be developed by the Contractor which reflect this Design Philosophy

FOR AUDIO FREQUENCY TRACK CIRCUITS
SEE STANDARD DRAWING
ST-ATC-IEQ-009

DESIGNED	ACC	10/2016 DATE
DRAWN	JMR	02/2000 DATE
CHECKED		DATE
APPROVED		DATE

REFERENCE DRAWINGS

NUMBER	DESCRIPTION

REVISIONS

DATE	BY	DESCRIPTION
11/03/2016	MM	CREATED FOR FQ15192

WASHINGTON METROPOLITAN TRANSIT AUTHORITY

DEPARTMENT OF TRANSIT INFRASTRUCTURE AND ENGINEERING SERVICES
OFFICE OF THE CHIEF ENGINEER, INFRASTRUCTURE

SUBMITTED _____ DATE

APPROVED _____ CHIEF ENGINEER DATE

TYPICAL MAINLINE SIGNAL RAIL BONDING
(POWER FREQUENCY TRACK CIRCUITS)

AUTOMATIC TRAIN CONTROL

SCALE	DRAWING NO.	SHEET NO.
	ST-ATC-IEQ-010	

This Drawing Reflects a WMATA standard design approach. Project specific drawings must be developed by the Contractor which reflect this Design Philosophy

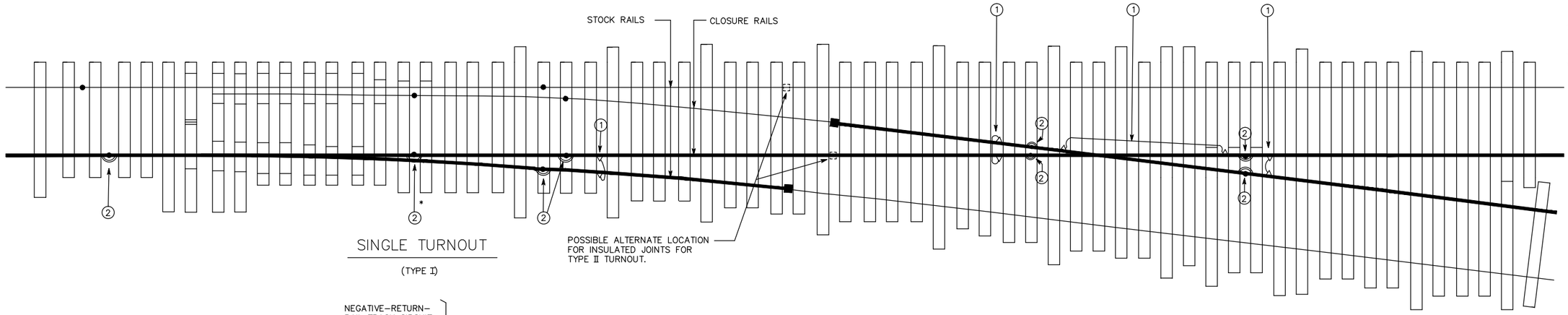

SINGLE TURNOUT

(TYPE I)

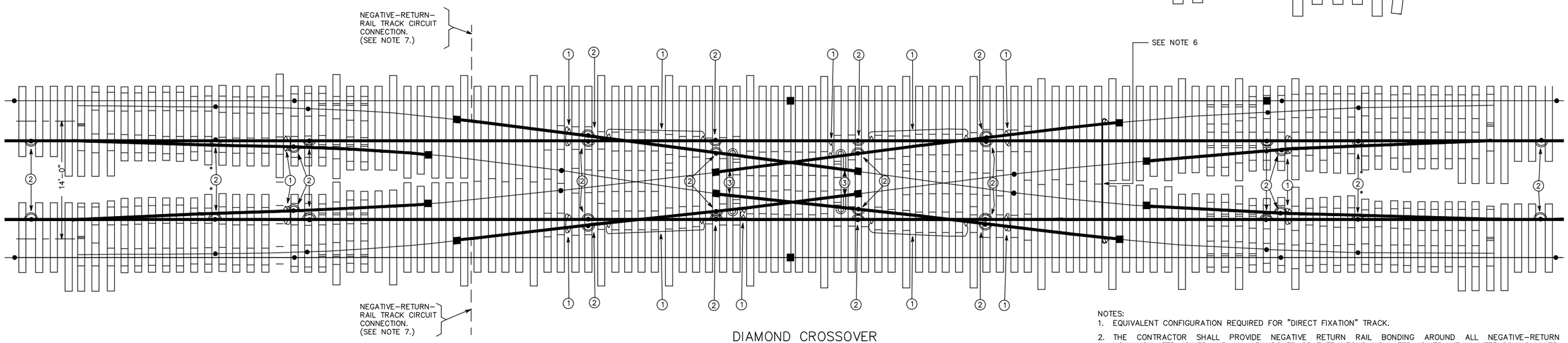

DIAMOND CROSSOVER

EQUIPMENT

1. 1,000 KCMIL FROG OR CROSSBOND CABLE WITH LUG CONNECTION, PER DETAIL "A".
2. TWO 500 KCMIL BONDS, ONE ON EACH SIDE OF THE RAILS, SHALL BE BOLTED TO THE WEB OF THE RAILS, MECHANICAL INSERT BUSHINGS, AT THE CENTERLINE OF THE WEB, 4 INCHES BEYOND THE JOINT BARS, AS SHOWN IN DETAIL "B", EXCEPT THAT ONLY ONE 500 KCMIL BOND SHALL BE USED WHEN BONDING TO THE HEELS OF SWITCH POINT RAILS.
3. ONE 500 KCMIL INSULATED ROPELAY BOND CABLE SHALL BE BOLTED, USING MECHANICAL INSERT BUSHINGS, TO THE WEB OF THE TWO RAILS.

LEGEND

- NEGATIVE RETURN RAIL (THIS DRAWING ONLY)
- SIGNAL RAIL
- RAIL JOINTS
- INSULATED RAIL JOINTS
- NEGATIVE RETURN RAIL JOINT WITH 2-500 KCMIL ROPELAY INSULATED BOND CABLES COMPRESSION BOLTED TO THE WEB OF THE RAILS AT THE CENTERLINE OF THE WEB, 4 INCHES BEYOND THE ENDS OF THE JOINT BAR, AS SHOWN IN DETAIL "B'.
- * ONLY 1-500 KCMIL BOND FOR SWITCH POINT HEELS.
- ③ ONE 500 KCMIL BOLTED USING MECHANICAL INSERT BUSHINGS TO THE WEB OF THE RAIL.
- RAIL-WEB CONNECTION FOR 1000 KCMIL BOND. SEE DETAIL "A" SEE NOTE 2..

NOTES:

1. EQUIVALENT CONFIGURATION REQUIRED FOR "DIRECT FIXATION" TRACK.
2. THE CONTRACTOR SHALL PROVIDE NEGATIVE RETURN RAIL BONDING AROUND ALL NEGATIVE-RETURN NON-INSULATED JOINTS AND ALL ABANDONED OR EXTRANEOUS INSULATED JOINTS WITHIN INTERLOCKING LIMITS. (SEE DETAIL "B"). THIS BONDING SHALL CONSIST OF TWO 500 KCMIL, BOLTED MECHANICAL INSERT BUSHINGS RAIL-WEB CONNECTIONS, BACK-TO-BACK WHEREVER POSSIBLE, EXCEPT AT SWITCH POINT RAIL HEELS, WHERE ONLY ONE 500 KCMIL BOLTED MECHANICAL INSERT BUSHING BOND SHALL BE APPLIED. WHERE IT IS NOT POSSIBLE TO INSTALL THE REQUIRED NUMBER OF 500 KCMIL BOLTED BONDS. THE CONTRACTOR SHALL USE ONE 1000 KCMIL BOLTED MECHANICAL INSERT BUSHING BOND INSTEAD.
3. THE CONTRACTOR SHALL PROVIDE 1000 KCMIL BOLTED MECHANICAL INSERT BUSHING BONDS FOR NEGATIVE-RETURN PURPOSES IN THE FOLLOWING SITUATIONS:
   - AROUND RAIL FROGS WHICH DO NOT HAVE A CONTINUOUS RUNNING RAIL THROUGH THEFROG FOR THE DESIRED ELECTRICAL PATHWAY.
   - BETWEEN ADJACENT, NON-SEQUENTIAL RUNNING RAILS.
   - AS TRANSPOSITION BONDS AT THE CENTER OF SINGLE-CROSSOVER AC TRACK CIRCUITS AND AT SINGLE TURNOUTS.
4. THE CONTRACTOR SHALL PROVIDE BOLTED MECHANICAL INSERT BUSHING RAIL WEB NEGATIVE-RETURN BONDING (2-500 KCMIL BONDS, BACK-TO-BACK) AROUND ALL ABANDONED OR EXTRANEOUS INSULATED JOINTS IN THE RUNNING RAILS OUTSIDE INTERLOCKING LIMITS. (SEE DETAIL "B").
5. THE CONTRACTOR SHALL INSPECT THE TRACKWORK TO ENSURE THAT NO SIGNAL RAIL IS SHUNTED TO A NEGATIVE-RETURN RAIL BY A TIE PLATE OR OTHER TRACK FASTENING DEVICE.
6. THIS SPECIAL, SINGLE 1000 KCMIL "CROSSBOND" SHALL BE PROVIDED ONLY IF THERE IS NO CONVENTIONAL, IMPEDANCE-BOND CROSSBONDING AT EITHER END OF THE INTERLOCKING OR WITHIN 300 FEET OF EITHER END OF THE INTERLOCKING LIMITS. BOLTED MECHANICAL INSERT BUSHING FOR THIS BOND SHALL BE APPLIED AS CLOSE AS POSSIBLE TO THE INSULATED JOINTS AT EITHER END OF THE CROSSOVER TRACK CIRCUIT. NEGATIVE RETURN-RAIL TRACK CIRCUIT CONNECTIONS FOR THE DIAMOND TRACK CIRCUIT SHALL BE MADE AT THE OPPOSITE END OF THE CROSSOVER AS INDICATED HERE AND ON THE APPLICABLE DOUBLE-LINE TRACK PLAN DRAWING(S). SEE NOTE 7.
7. THESE CONNECTIONS SHALL BE MADE AT THE END OF THE CROSSOVER TRACK CIRCUIT FARTHEST AWAY FROM THE NEAREST CONVENTIONAL OR SPECIAL CROSSBONDING BETWEEN THE MAINLINE TRACKS. THE CONTRACTOR SHALL MAKE THE NEGATIVE-RETURN-RAIL TRACK CIRCUIT CONNECTIONS FOR THE DIAMOND TRACK CIRCUIT AS CLOSE TO THE INSULATED JOINTS AS POSSIBLE.

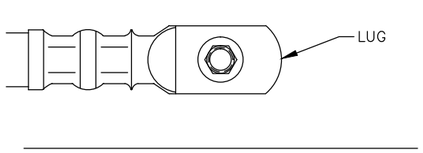

FRONT (RAIL GAUGE SIDE) VIEW

DETAIL 'A'

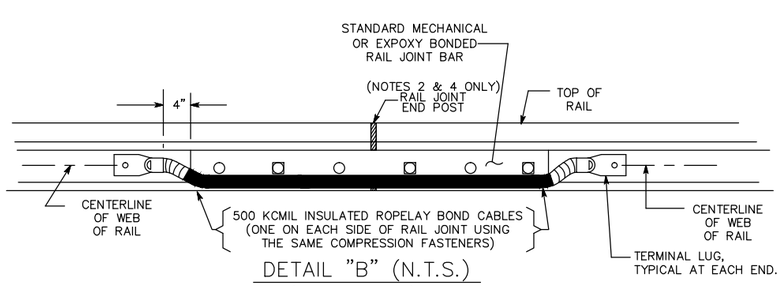

DETAIL "B" (N.T.S.)

(SEE NOTES 2 & 4)

FOR AUDIO FREQUENCY TRACK CIRCUITS
SEE STANDARD DRAWING: ST-ATC-IEQ-011

DESIGNED	ACC	10/2016 DATE
DRAWN	JMR	02/2000 DATE
CHECKED		DATE
APPROVED		DATE

REFERENCE DRAWINGS

NUMBER	DESCRIPTION

REVISIONS

DATE	BY	DESCRIPTION
01/27/2017	MM	CREATED FOR FQ15192 (PFTC CONFIGURATION)

WASHINGTON METROPOLITAN TRANSIT AUTHORITY

DEPARTMENT OF TRANSIT INFRASTRUCTURE AND ENGINEERING SERVICES
OFFICE OF THE CHIEF ENGINEER, INFRASTRUCTURE

SUBMITTED DATE

APPROVED CHIEF ENGINEER DATE

TYPICAL MAINLINE NEGATIVE RETURN BONDING (POWER FREQUENCY TRACK CIRCUITS)

SCALE

DRAWING NO. ST-ATC-IEQ-012

SHEET NO.

LAYOUT "A"

G.R.S. CO. TYPE
MODEL 55, OR APPROVED EQUAL

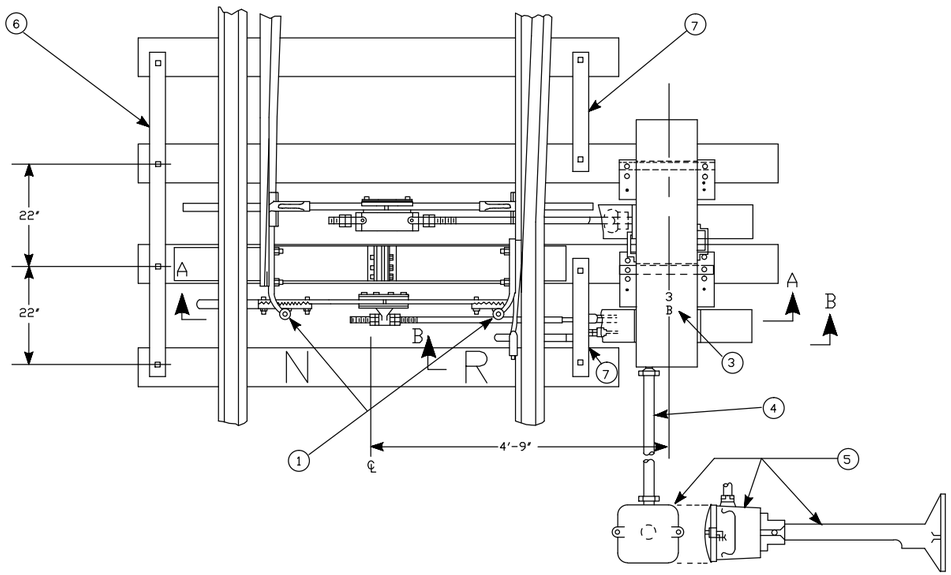

LAYOUT "B"

U.S. & S. CO. TYPE
STYLE M-3, OR APPROVED EQUAL

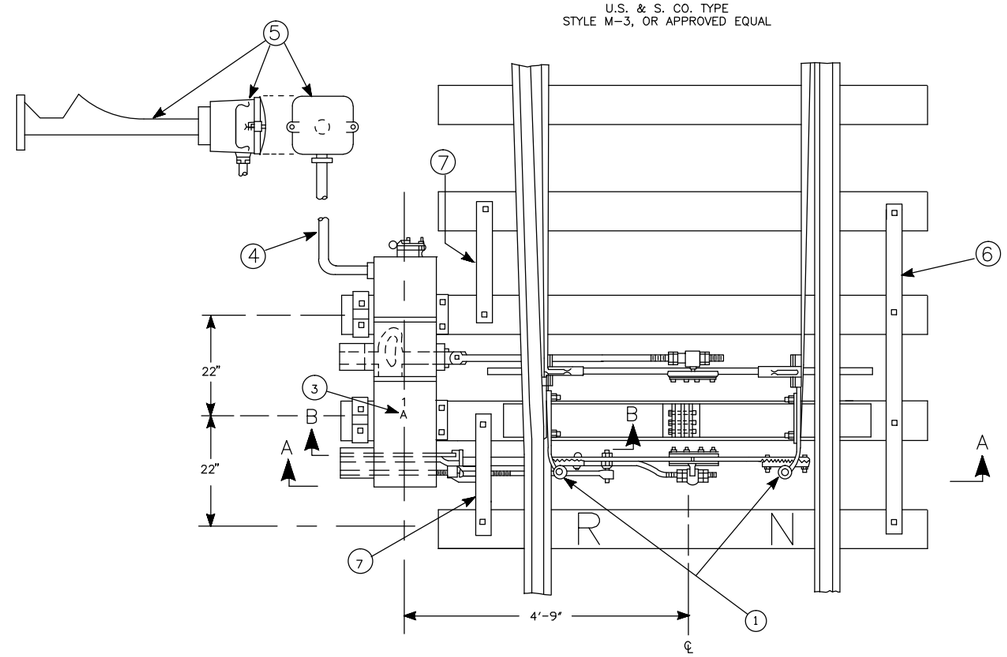

NOTES

1. LAYOUTS SHOWN REPRESENT REQUIREMENTS OF INSTALLATION AND ARE NOT INTENDED TO SHOW SPECIFIC TYPE OF EQUIPMENT OR PARTS IN LAYOUT.
2. CONTRACTOR SHALL MARK, DRILL, AND APPLY APPROVED HARDWARE TO MOUNT SWITCH-AND-LOCK MOVEMENT TO SWITCH TIES IN PROPER ALIGNMENT WITH THE SWITCH POINTS.
3. CONTRACTOR SHALL DAP SWITCH TIES AS REQUIRED TO PROVIDE PROPER SWITCH-AND-LOCK MOVEMENT HEIGHT.
4. LETTERS "N" & "R" SHALL BE ATTACHED IN THE PROPER POSITION TO INDICATE, RESPECTIVELY, THE NORMAL AND REVERSE POSITIONS OF THE SWITCH POINTS AS SPECIFIED IN SECTION 16964.
5. RODS, POINT LUGS, BRACKETS, LETTERS, CLAMPS, BOLTS, NUTS, AND WASHERS SHALL BE IN ACCORDANCE WITH THE WRITTEN SPECIFICATIONS. THE CENTERLINE OF SWITCH MACHINE MOUNTING BOLTS SHALL NOT BE LESS THAN 2 3/4 INCHES FROM THE EDGE OF A TIE.
6. TIES SHALL BE DAPPED ONLY TO THE EXTENT NECESSARY FOR THE PROPER INSTALLATION OF THE SWITCH MACHINE. BALLAST SHALL BE BUILT UP AND TAMPED UNDER THE TIES SUPPORTING THE SWITCH MACHINE AND LEVELED TO THE TOP OF THE TIES FOR A DISTANCE OF 2 FEET IN ALL DIRECTIONS EXCEPT WHERE SWITCH RODS ARE LOCATED.

EQUIPMENT

1. SWITCH POINT LUGS SHALL BE MANUFACTURER'S STANDARD.
2. 3/4" SQ. HD. BOLTS, CAST IRON WASHER PER AAR DWG. 1458C
3. SWITCH MECHANISM NUMBER, PER ARTICLE 3.5.19.
4. "CORDURA" HOSE OR METALLIC FLEXIBLE CONDUIT, WITH CLAMPS, TO WAYSIDE SWITCH JUNCTION BOX.
5. CAST IRON JUNCTION BOX AND PEDESTAL.
6. LONG TIE STRAPS SHALL BE 1/2" X 2" X 6'-0" STEEL BARS, FASTENED WITH 3/4" X 4" DRIVE LAGS.
7. SHORT TIE STRAPS SHALL BE 1/2" X 2" X 2'-3" STEEL BARS, FASTENED WITH 3/4" X 4" DRIVE LAGS.

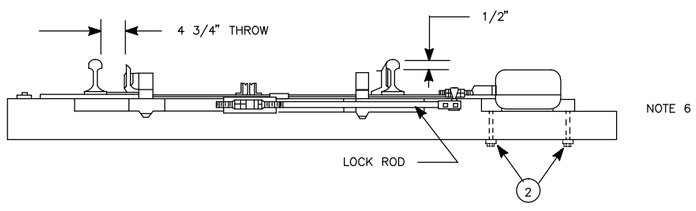

SECTION A-A

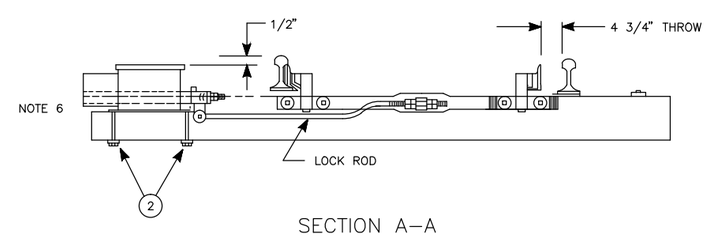

SECTION A-A

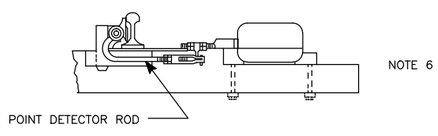

SECTION B-B

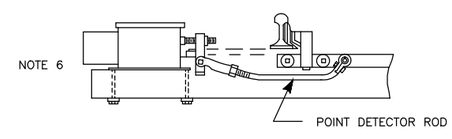

SECTION B-B

This Drawing Reflects a WMATA standard design approach. Project specific drawings must be developed by the Contractor which reflect this Design Philosophy

DESIGNED	GAH	2-00 DATE
DRAWN	JMR	2-00 DATE
CHECKED		DATE
APPROVED		DATE
UPDATED		DATE

REFERENCE DRAWINGS

NUMBER	DESCRIPTION

REVISIONS

DATE	BY	DESCRIPTION
08/2001	SYSP	Revised and issued by the Authority

WASHINGTON METROPOLITAN AREA TRANSIT AUTHORITY

DEPARTMENT OF TRANSIT SYSTEM DEVELOPMENT
OFFICE OF SYSTEMS

SUBMITTED _____ DATE

APPROVED _____ DIRECTOR May 3, 2001 DATE

TYPICAL SWITCH-AND-LOCK MOVEMENT LAYOUT ON BALLASTED TRACK

SCALE NONE

DRAWING NO. ST-ATC-IEQ-013

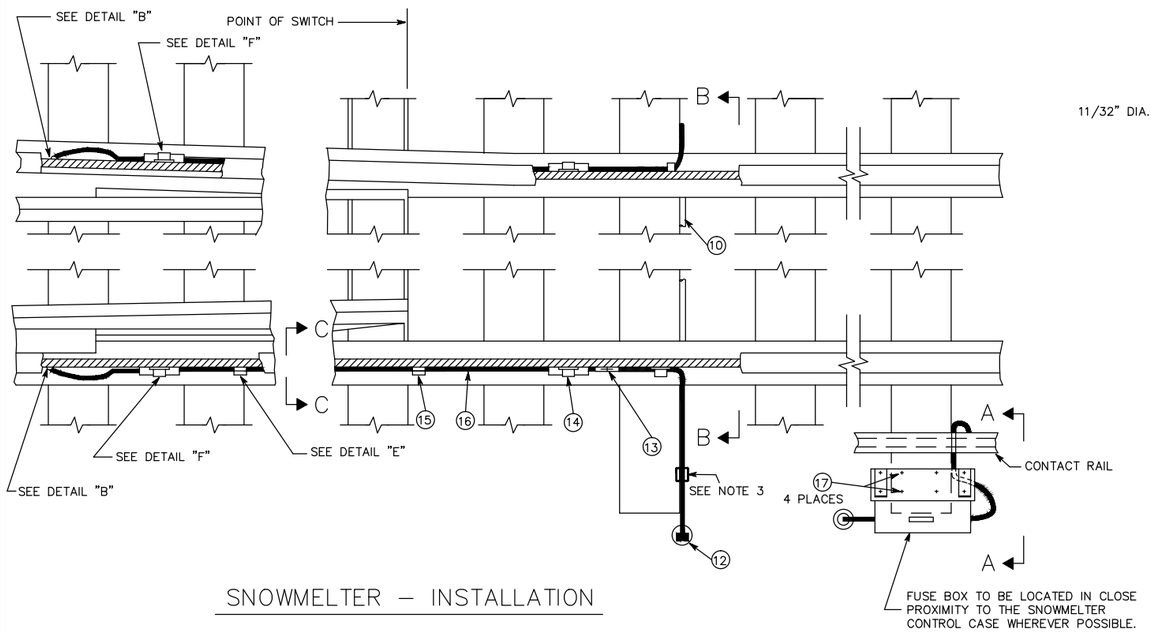

SNOWMELTER – INSTALLATION

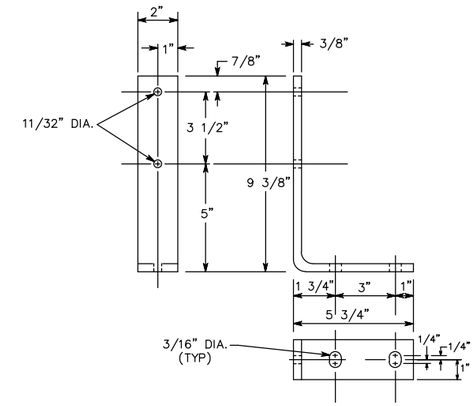

DETAIL "A"
ITEM 2

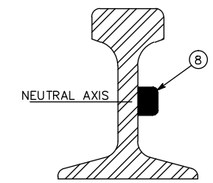

DETAIL "B"
ITEM 8

NOTES:

1. ALL HARDWARE SHALL BE GALVANIZED UNLESS OTHERWISE SHOWN.
2. ALL LOCK WASHERS SHALL BE CADMIUM PLATED.
3. CONNECT HEATER CABLE TAIL & NO. 6 STRANDED COPPER EXTENSION CABLE WITH NICOPRESS SPLICE CONNECTOR. INSULATE CONNECTION WITH HEAT SHRINK TUBING, 1000V RATING.
4. WHEN SNOWMELTER CONTROL CASE IS LOCATED ON OPPOSITE SIDE OF RUNNING RAILS FROM CONTACT RAIL, A 3" FRE CONDUIT SHALL BE PROVIDED FOR SNOWMELTER WIRES CROSSING TRACKS.
5. EQUIVALENT CONFIGURATION REQUIRED FOR DIRECT FIXATION INSTALLATION.
6. CONTRACTOR SHALL PROVIDE FUSE BOX AND FUSE OF APPROPRIATE SIZE FOR EACH INDIVIDUAL SNOWMELTER CONTROL CASE.

ITEM NO.	DESCRIPTION	QTY. REQ. PER ASSY
1	FUSE BOX FOR CONTACT RAIL TAPS	1
2	L BRACKET – WOOD TIE	2
3	1/2" X 1 1/2" L. HEX HEAD MACHINE BOLT	4
4	1/2" FLAT WASHER	4
5	1/2" LOCK WASHER	4
6	1/2" HEX NUT	4
7	3/8" PLATE – A.S.T.M. – A36	1
8	EXOTHERMIC CONNECTION	AS REQ.
9	INSULATED WIRE CLAMPS W/NAILS	AS REQ.
10	1" FRE CONDUIT	AS REQ.
11	CONDUIT CLAMP	AS REQ.
12	1" I.D. X 2' L. HEAVY DUTY RUBBER HOSE	1
13	QUICK–DISCONNECT TERMINAL	4
14	TERMINAL HOUSING CLAMP – HARDWARE INCLUDED	8
15	HEATER CLAMP – HARDWARE INCLUDED	AS REQ.
16	SNOWMELTER HEATING ELEMENT	2
17	1/2" X 3 1/2" L. LAG SCREW	4

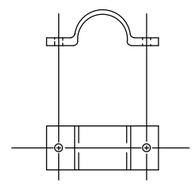

DETAIL "C"
ITEM 9

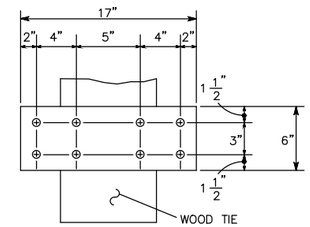

DETAIL "D"
ITEM 7

SNOWMELTER HEATING ELEMENT

TURNOUT	SW. PT. LENGTH	ACTIVE LENGTH	OVERALL LENGTH	QTY. PER ASSY.
NO. 6	11'–0"	10'–0"	@ 11'–6"	2
NO. 8	16'–6"	15'–6"	@ 17'–0"	2
NO. 10	19'–6"	18'–6"	@ 21'–4"	2

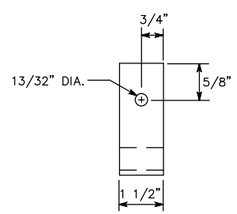

DETAIL "E"
ITEM 15

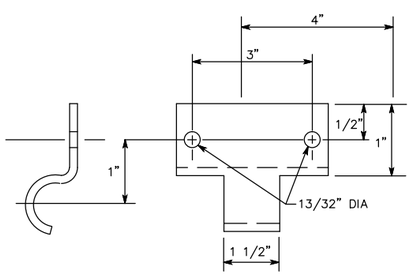

DETAIL "F"
ITEM 14

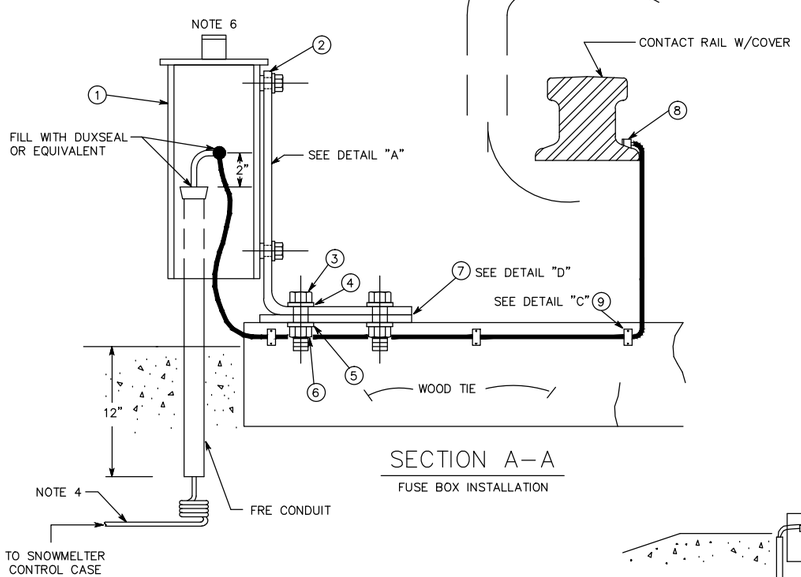

SECTION A–A
FUSE BOX INSTALLATION

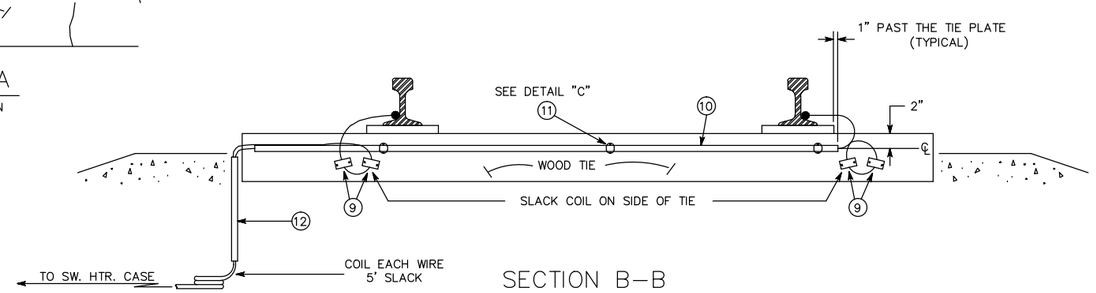

SECTION B–B

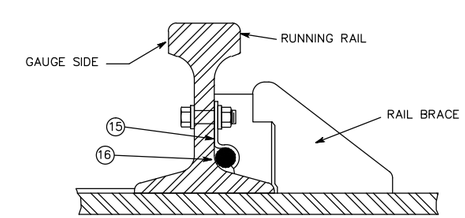

SECTION C–C

This Drawing Reflects a WMATA standard design approach. Project specific drawings must be developed by the Contractor which reflect this Design Philosophy

DESIGNED	GAH	2–00 DATE
DRAWN	JMR	2–00 DATE
CHECKED		DATE
APPROVED		DATE
UPDATED		DATE

REFERENCE DRAWINGS

NUMBER	DESCRIPTION

REVISIONS

DATE	BY	DESCRIPTION
08/2001	SYSP	Revised and issued by the Authority
02/14/17	MM	REPLACED PVC CONDUIT WITH FRE

WASHINGTON METROPOLITAN AREA TRANSIT AUTHORITY

DEPARTMENT OF TRANSIT SYSTEM DEVELOPMENT
OFFICE OF SYSTEMS

SUBMITTED — DATE

APPROVED — DIRECTOR — May 3, 2001 DATE

TYPICAL SNOWMELTER LAYOUT

SCALE: NONE

DRAWING NO. ST–ATC–IEQ–015

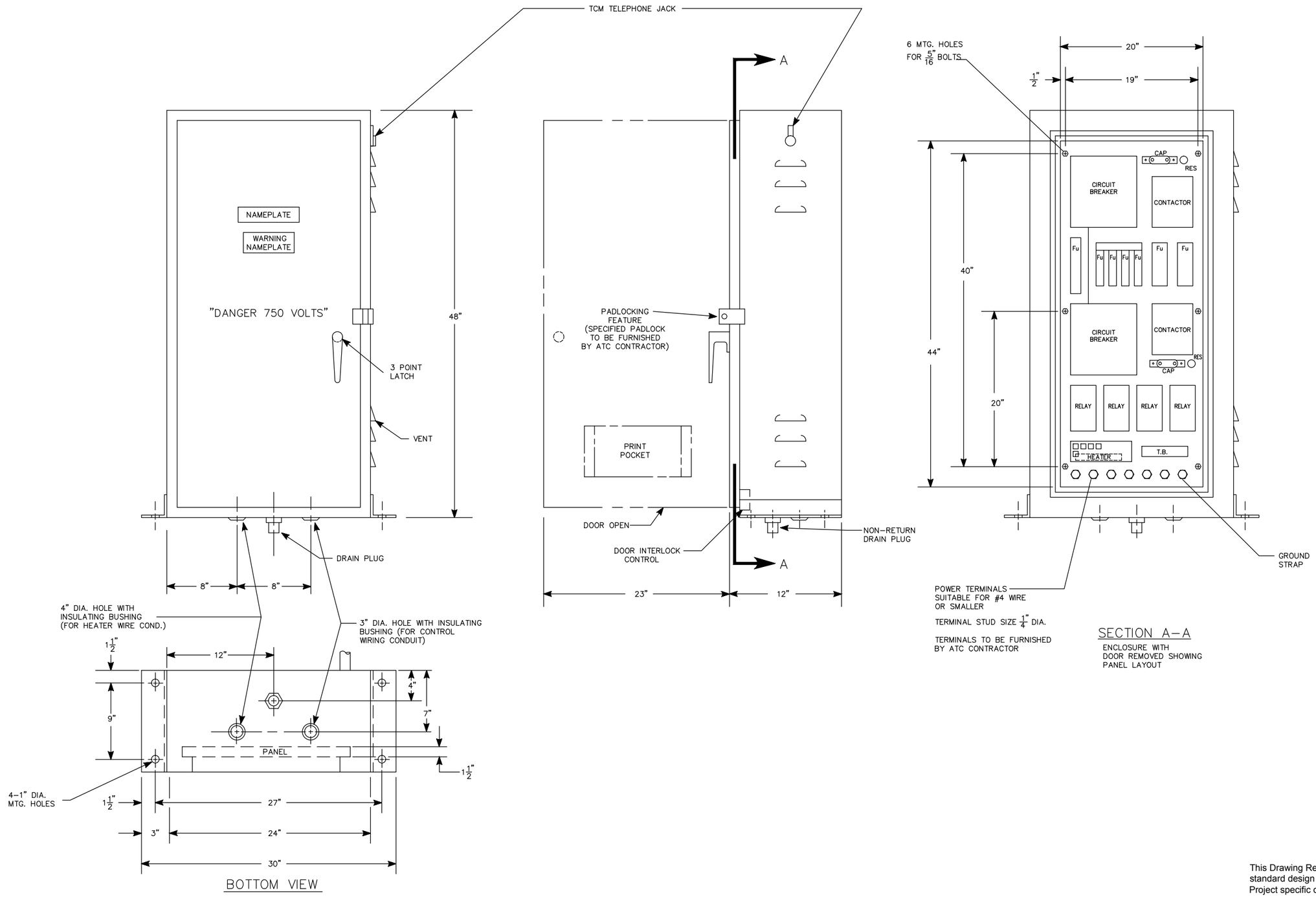

This Drawing Reflects a WMATA standard design approach. Project specific drawings must be developed by the Contractor which reflect this Design Philosophy

DESIGNED	GAH	2-00 DATE
DRAWN	JMR	2-00 DATE
CHECKED		DATE
APPROVED		DATE
UPDATED		DATE

REFERENCE DRAWINGS

NUMBER	DESCRIPTION

REVISIONS

DATE	BY	DESCRIPTION
08/2001	SYSP	Revised and issued by the Authority

WASHINGTON METROPOLITAN AREA TRANSIT AUTHORITY

DEPARTMENT OF TRANSIT SYSTEM DEVELOPMENT
OFFICE OF SYSTEMS

SUBMITTED _____ DATE

APPROVED DIRECTOR _____ May 3, 2001 DATE

TYPICAL SNOWMELTERS CONTROL CASE

SCALE: NONE

DRAWING NO. ST-ATC-IEQ-016

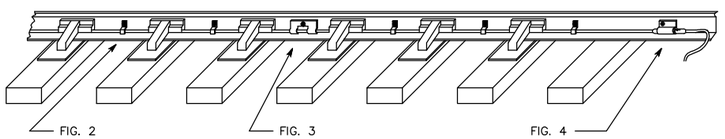

FIGURE 1 : TYPICAL SWITCH POINT HEATER INSTALLATION

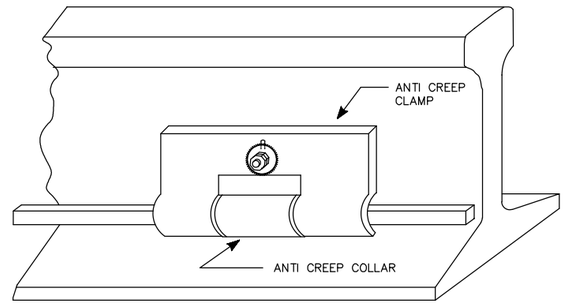

WHEN USING THE ANTI–CREEP CLAMP, IT SHALL BE MOUNTED FIRMLY AGAINST THE HEATER WITH THE "ARMS" BUTTED AGAINST EACH SIDE OF THE ANTI–CREEP COLLAR TO PREVENT LONGITUDINAL MOVEMENT. THE SLOT IN THE BOLT HOLE OF THIS CLAMP ALLOWS CORRECT VERTICAL POSITIONING.

FIGURE 3 : ANTI–CREEP CLAMP

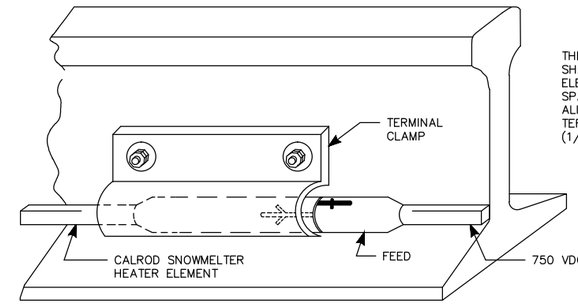

THE CENTER OF THE HEATER END CLAMP SHALL BE MOUNTED TOWARD THE HEATER ELEMENT LEAVING ADEQUATE SPACE TO VIEW THE "QUICK CONNECT" ALIGNMENT ARROWS AND TIGHTEN THE TERMINAL TO THE LOCK POSITION (1/4 TURN CLOCKWISE).

FIGURE 4 : TERMINAL CLAMP

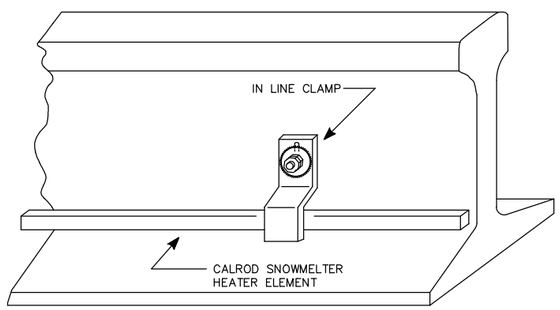

THE SLOT IN THIS CLAMP ALLOWS CORRECT VERTICAL POSITIONING. THE CLAMP SHALL BE ARRANGED TO ALLOW LONGITUDINAL MOVEMENT OF THE HEATER AS A RESULT OF EXPANSION AND CONTRACTION.

FIGURE 2 : IN–LINE CLAMP

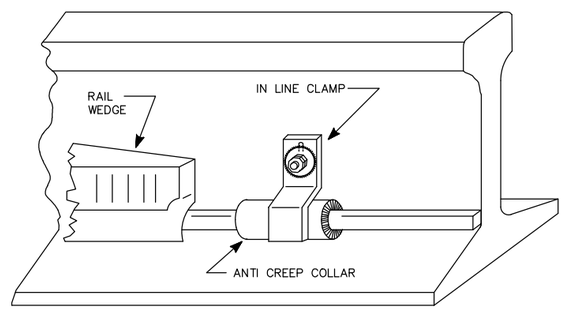

ON SOME HEATER ELEMENTS, THE ANTI–CREEP COLLAR MUST BE LOCATED NEAR A RAIL WEDGE, PREVENTING THE INSTALLATION OF THE ANTI–CREEP CLAMP. IN THIS CASE, AN IN LINE CLAMP SHALL BE FIRMLY MOUNTED AGAINST THE CENTER OF THE ANTI–CREEP COLLAR.

FIGURE 3A : ALTERNATE ANTI–CREEP CLAMP

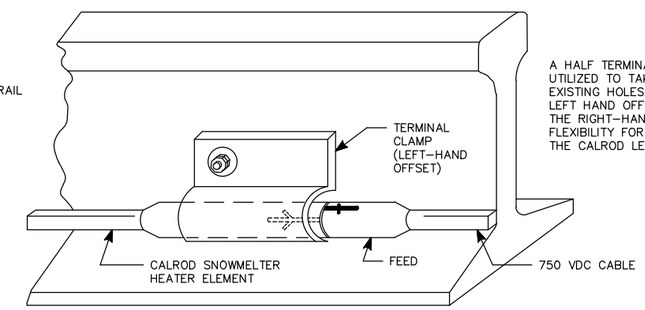

A HALF TERMINAL CLAMP MAY BE UTILIZED TO TAKE ADVANTAGE OF EXISTING HOLES IN THE RAIL. THE LEFT HAND OFFSET (PICTURED) OR THE RIGHT–HAND OFFSET ALLOWS FLEXIBILITY FOR VARIANCES IN THE CALROD LENGTH.

FIGURE 4A : ALTERNATE TERMINAL CLAMP

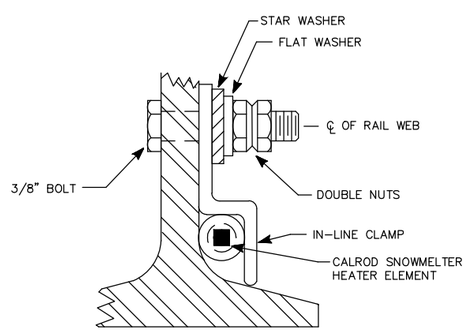

THE HEAD OF BOLT SHALL ALWAYS BE MOUNTED FACING THE SWITCH POINT.

FIGURE 2A : SIDE VIEW – IN–LINE CLAMP

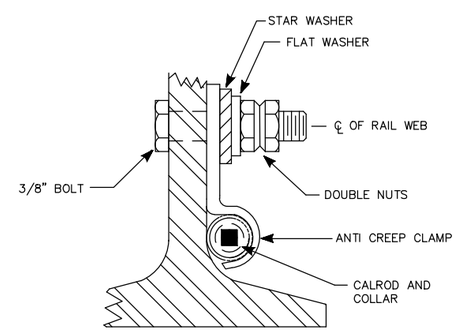

THE HEAD OF BOLT SHALL ALWAYS BE MOUNTED FACING THE SWITCH POINT.

FIGURE 3B : SIDE VIEW – ANTI–CREEP CLAMP

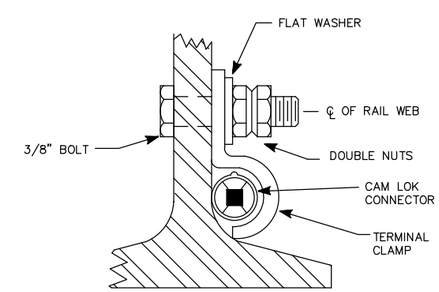

THE HEATER END CLAMP SHALL BE MOUNTED SO AS NOT TO INTERFERE WITH THE LONGITUDINAL MOVEMENT OF THE "QUICK CONNECT" TERMINAL. THIS CLAMP IS MEANT TO SERVE AS A GUIDEWAY, AND SHALL NEVER PINCH THE "CAM–LOK" CONNECTOR.

FIGURE 4B : SIDE VIEW – TERMINAL CLAMP

This Drawing Reflects a WMATA standard design approach. Project specific drawings must be developed by the Contractor which reflect this Design Philosophy

DESIGNED	GAH	2–00 DATE
DRAWN	JMR	2–00 DATE
CHECKED		DATE
APPROVED		DATE
UPDATED		DATE

REFERENCE DRAWINGS

NUMBER	DESCRIPTION

REVISIONS

DATE	BY	DESCRIPTION
08/2001	SYSP	Revised and issued by the Authority
02/14/17	MM	REPLACED TUBULAR CAL ROD WITH RECTANGULAR

WASHINGTON METROPOLITAN AREA TRANSIT AUTHORITY

DEPARTMENT OF TRANSIT SYSTEM DEVELOPMENT
OFFICE OF SYSTEMS

SUBMITTED _____ DATE

APPROVED _____ DIRECTOR May 3, 2001 DATE

TYPICAL SNOWMELTER HEATING ELEMENT MOUNTING DETAILS

SCALE NONE

DRAWING NO. ST–ATC–IEQ–017

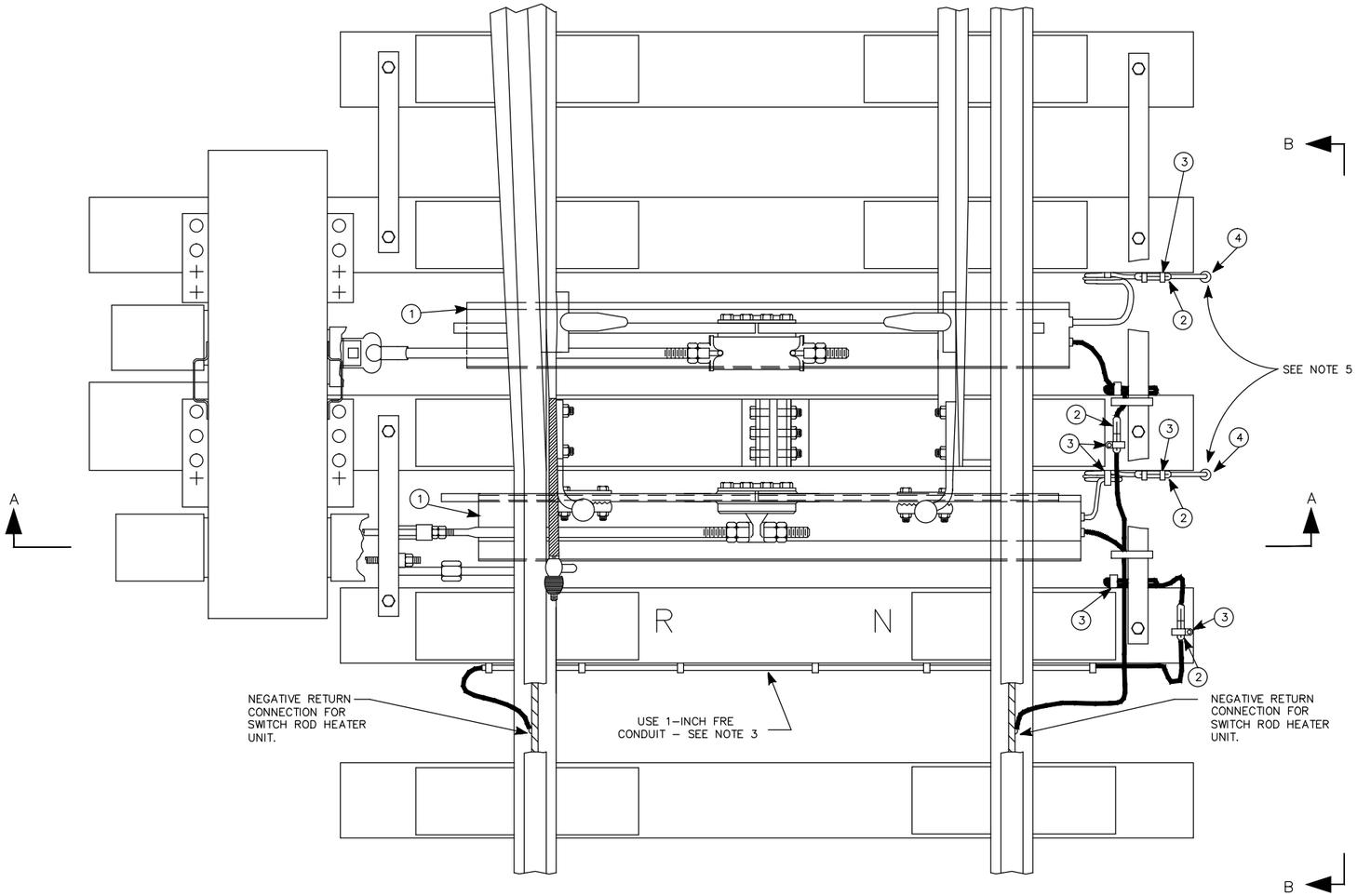

PLAN VIEW

NOTES:

1. CONTRACTOR SHALL REMOVE BALLAST TO BOTTOM OF EACH CRIB IN WHICH A SWITCH ROD HEATER UNIT IS TO BE INSTALLED.
2. PERMANENT (FEMALE) ENDS OF QUICK–DISCONNECT TERMINATIONS FOR #10 AWG CONTROL AND NEGATIVE–RETURN CABLES SHALL BE CLAMPED TO THE TIES ON THE ENDS AWAY FROM THE SWITCH MACHINE.
3. NEGATIVE–RETURN CABLES FOR THE SWITCH ROD HEATER UNITS SHALL BE ATTACHED TO THE NEUTRAL AXIS OF THE RUNNING RAILS BY MEANS OF EXOTHERMIC CONNECTIONS. ONE NEGATIVE–RETURN CABLE SHALL BE CONNECTED TO THE "NEAR" RUNNING RAIL, AND THE OTHER NEGATIVE – RETURN CABLE SHALL BE CONNECTED TO THE "FAR" RUNNING RAIL AS INDICATED, IN ORDER NOT TO UNBALANCE THE AUDIO FREQUENCY TRACK CIRCUIT. AS AN ALTERNATIVE, BOTH NEGATIVE–RETURN CABLES SHALL BE CONNECTED TO THE CENTER–TAP OF THE NEAREST IMPEDANCE BOND IN A MANNER APPROVED BY THE ENGINEER.
4. CONTRACTOR SHALL INSTALL AT LEAST 5 FEET OF SLACK CABLE IN A COIL AT THE BASE OF EACH CONTROL CABLE STUB–UP.
5. CONTROL CABLE FROM SNOWMELTER CONTROL CASE SHALL BE FIELD CONNECTED TO THE CONTROL–CABLE PIGTAIL FROM THE FEMALE PORTION OF THE QUICK–DISCONNECT TERMINATION BY MEANS OF A NICOPRESS OR OTHER APPROVED CONNECTOR. THIS CONNECTION SHALL BE INSULATED WITH HEAT–SHRINK TUBING OF 1000–VOLT RATING.
6. CONTROL–CABLE PIGTAILS SHALL BE RED CABLE. NEGATIVE–RETURN PIGTAILS SHALL BE BLACK CABLE.
7. HAZARDOUS VOLTAGES MAY BE PRESENT ON THE UNGROUNDED CASE OF THE SWITCH ROD HEATER UNIT. THE CONTRACTOR SHALL ADVISE HIS FIELD INSTALLATION PERSONNEL OF THIS POTENTIAL HAZARD AND BE RESPONSIBLE FOR THEIR SAFETY. THE CONTRACTOR SHALL ALSO INCLUDE A WARNING OF THIS POTENTIAL HAZARD ON ALL DRAWINGS SHOWING THIS UNIT AND SHALL INCLUDE THIS WARNING IN HIS OPERATIONS & MAINTENANCE MANUALS FOR THE SAFETY AND GUIDANCE OF THE AUTHORITY'S PERSONNEL.
8. THE CONTRACTOR SHALL INCLUDE A SECTION IN THE OPERATIONS & MAINTENANCE MANUAL OUTLINING PERIODIC TESTS TO BE MADE ON THE CASE OF THE SWITCH ROD HEATER UNITS TO DETECT A BREAKDOWN OF INSULATION BETWEEN THE CASE AND EITHER THE 750 V SUPPLY CABLE OR THE NEGATIVE–RETURN CABLE.
9. THE CONTRACTOR SHALL FORM THE EXCESS LENGTH OF EACH HEATER PIG–TAIL LEAD INTO A CIRCULAR COIL AND ATTACH IT VERTICALLY TO THE SIDE OF THE ADJACENT CROSSTIE USING AT LEAST TWO SCREW–MOUNTED POLYETHYLENE CABLE CLAMPS. CARE SHALL BE TAKEN NOT TO COMPRESS THE CABLE AGAINST ANY METAL PARTS OR SHARP EDGES.

EQUIPMENT

1. SWITCH ROD HEATER UNIT
2. QUICK–DISCONNECT TERMINATION (MALE HALF ON HEATER UNIT LEAD)
3. CLAMPING DEVICE, MIDLAND–ROSS CAT. NO. C–705, OR EQUAL
4. 1–INCH I.D. X 2–FOOT LONG HEAVY DUTY RUBBER HOSE.

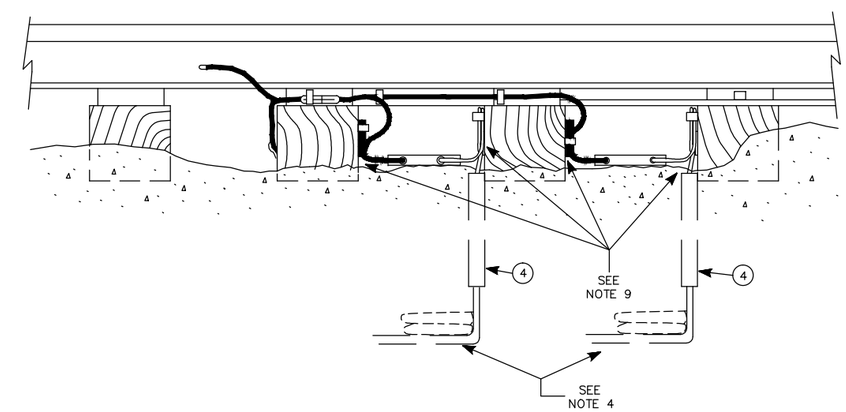

SIDE VIEW
SECTION B – B

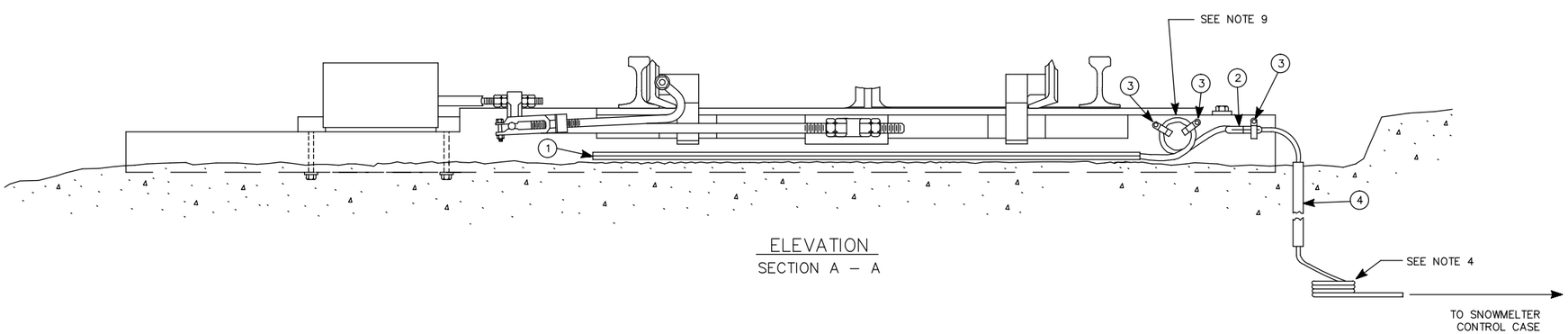

ELEVATION
SECTION A – A

This Drawing Reflects a WMATA standard design approach. Project specific drawings must be developed by the Contractor which reflect this Design Philosophy

DESIGNED	GAH	2–00 DATE
DRAWN	JMR	2–00 DATE
CHECKED		DATE
APPROVED		DATE
UPDATED		DATE

REFERENCE DRAWINGS

NUMBER	DESCRIPTION

REVISIONS

DATE	BY	DESCRIPTION
08/2001	SYSP	Revised and issued by the Authority
02/14/17	MM	REPLACED PVC CONDUIT WITH FRE

WASHINGTON METROPOLITAN AREA TRANSIT AUTHORITY

DEPARTMENT OF TRANSIT SYSTEM DEVELOPMENT
OFFICE OF SYSTEMS

SUBMITTED _____ DATE

APPROVED _____ DIRECTOR — May 3, 2001 DATE

TYPICAL SWITCH ROD HEATER LAYOUT ON BALLAST

SCALE: NONE

DRAWING NO. ST–ATC–IEQ–018

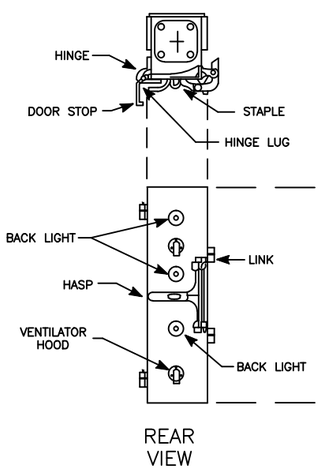

CONTROLLED SIGNAL MAST MOUNTED

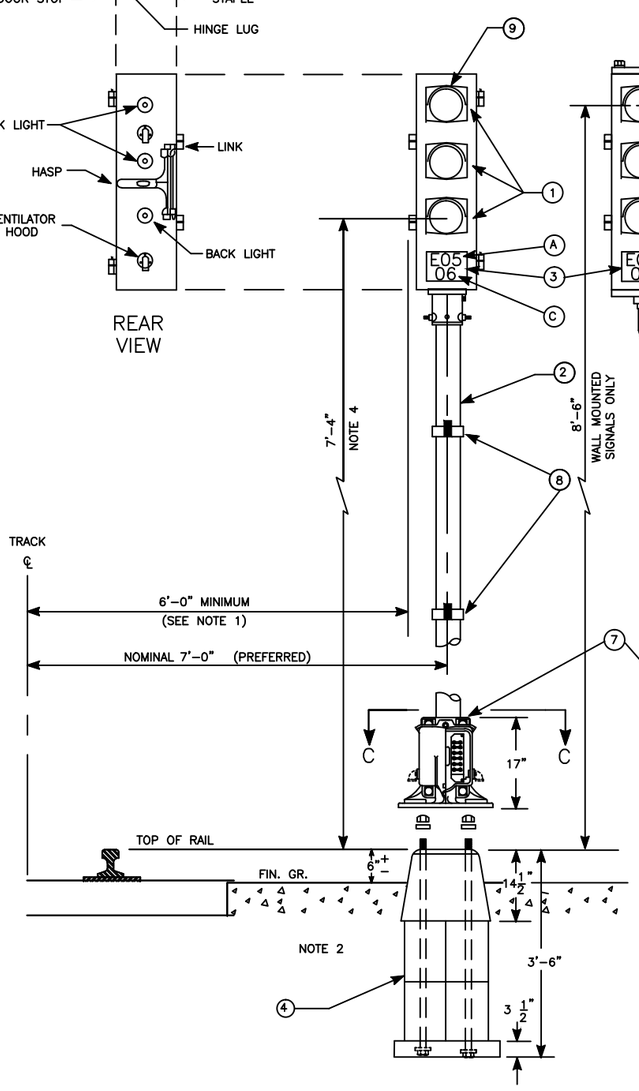

CONTROLLED SIGNAL WALL MOUNTED

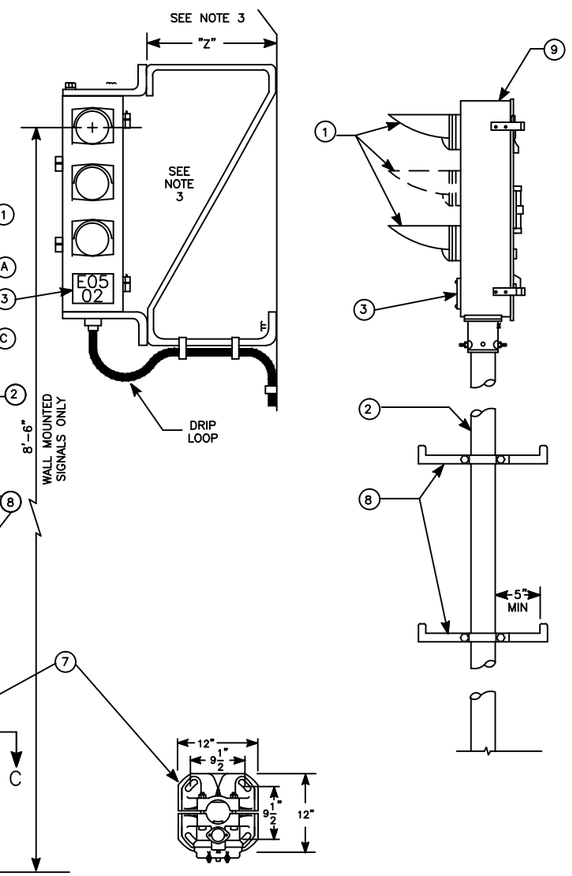

SECTION C–C

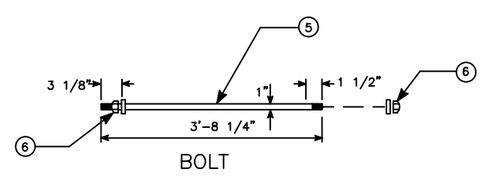

BOLT

MARKER SIGNAL

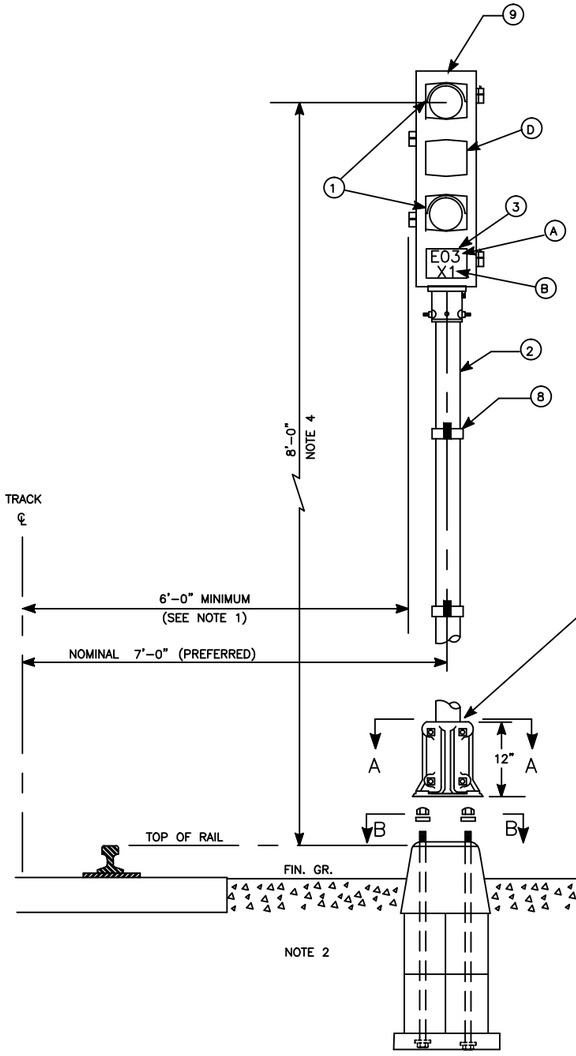

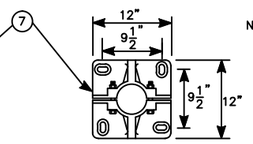

SECTION A–A

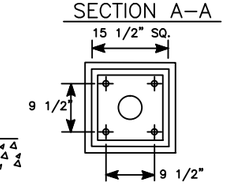

SECTION B–B

TYPICAL SIGNAL ASPECTS

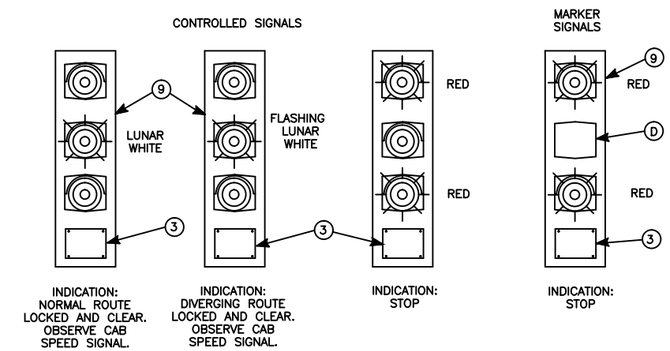

EQUIPMENT

- (A) ROUTE/LOCATION CODE.
- (B) LETTER "X" FOLLOWED BY TRACK NUMBER.
- (C) SIGNAL NUMBER.
- (D) BLANKING PLATE INSTEAD OF LENS ON MARKER SIGNALS ONLY.

- (1) NO HOODS REQUIRED ON SIGNALS MOUNTED IN TUNNEL.
- (2) 4" STEEL PIPE MAST, SEE SECTION 16965.
- (3) NUMBER PLATE, SEE SECTION 16965.
- (4) PRE–CAST CONCRETE FOUNDATION SEE SECTION 16975.
- (5) GALVANIZED 1" BOLT, 4 REQUIRED.
- (6) 1" NUT AND PLAIN WASHER, GALVANIZED, 8 REQUIRED
- (7) CAST IRON SPLIT BASE FOR 4" MAST. WITH OR WITHOUT JUNCTION BOX BASE, AS REQUIRED. SEE SECTION 16965.
- (8) SPLIT–CLAMP DOUBLE POLE STEPS. SEE NOTE 5.
- (9) SIGNAL HOUSINGS, LENSES, AND HOODS, PER SPECIFICATION SECTION 34–42–68.

NOTES:

1. THE CONTRACTOR SHALL INSTALL WAYSIDE SIGNALS THE PREFERRED 7'–0" DISTANCE FROM CENTERLINE OF TRACK WHEREVER THIS CAN BE ACHIEVED IN COMPLIANCE WITH CLEARANCE AND SIGHTING REQUIREMENTS. WHERE NOMINAL (PREFERRED) INSTALLATION CANNOT BE ACHIEVED, MINIMUM CLEARANCE REQUIREMENTS SHALL PREVAIL. MINIMUM CLEARANCE SHOWN FOR LEVEL, TANGENT TRACK. CLEARANCE DISTANCE SHALL BE INCREASED AS NECESSARY TO COMPENSATE FOR TRANSIT VEHICLE OVERHANG ON NON–TANGENT TRACK OR IN APPROACH TO TURNOUTS, AND TRANSIT VEHICLE TILTING ON SUPERELEVATED TRACK. SEE DWGS. ST–ATC–GEN–026 & ST–ATC–GEN–027.
2. FOR DIRECT FIXATION TO CONCRETE AT GRADE OR ON AERIAL STRUCTURE, CONTRACTOR SHALL INSTALL MAST MOUNTED SIGNALS ON CONCRETE SLAB OR CURB BY MEANS OF LEVELING BOLTS OR SPECIAL MOUNTING BRACKETS DESIGNED FOR THE SPECIFIC SITUATION ENCOUNTERED AS APPROVED BY THE DESIGNATED RESIDENT ENGINEER.
3. DIAGONAL BRACE REQUIRED IF DISTANCE "Z" EXCEEDS 4 INCHES. BRACE SHALL BE INSTALLED AS SHOWN, I.E., WITH THE DIAGONAL MEMBER IN TENSION.
4. SIGNAL (MAST) HEIGHT SHALL BE CHANGED WHERE NECESSARY TO OVERCOME SIGHTING PROBLEMS. THE CONTRACTOR SHALL DETERMINE WHERE SUCH CHANGES IN SIGNAL (MAST) HEIGHT ARE NECESSARY AND IMPLEMENT APPROVED CHANGES AT NO ADDITIONAL COST TO THE AUTHORITY.
5.
   - TOP STEP SHALL NOT BE LOWER THAN 5 FEET BELOW TOP OF SIGNAL.
   - BOTTOM STEP SHALL BE 1 FOOT ABOVE POLE BASE.
   - MAXIMUM DISTANCE BETWEEN STEPS SHALL NOT EXCEED 12 INCHES.
   - STEPS SHALL BE UNIFORMLY SPACED.

This Drawing Reflects a WMATA standard design approach. Project specific drawings must be developed by the Contractor which reflect this Design Philosophy

DESIGNED	GAH	2–00 DATE
DRAWN	JMR	2–00 DATE
CHECKED		DATE
APPROVED		DATE
UPDATED		DATE

REFERENCE DRAWINGS

NUMBER	DESCRIPTION

REVISIONS

DATE	BY	DESCRIPTION
08/2001	SYSP	Revised and issued by the Authority
3/30/17	MM	REVISED FOR FQ15192

WASHINGTON METROPOLITAN AREA TRANSIT AUTHORITY

DEPARTMENT OF TRANSIT SYSTEM DEVELOPMENT
OFFICE OF SYSTEMS

SUBMITTED _____ DATE

APPROVED _____ DIRECTOR May 3, 2001 DATE

TYPICAL SIGNAL LAYOUTS

SCALE NONE

DRAWING NO. ST–ATC–IEQ–019

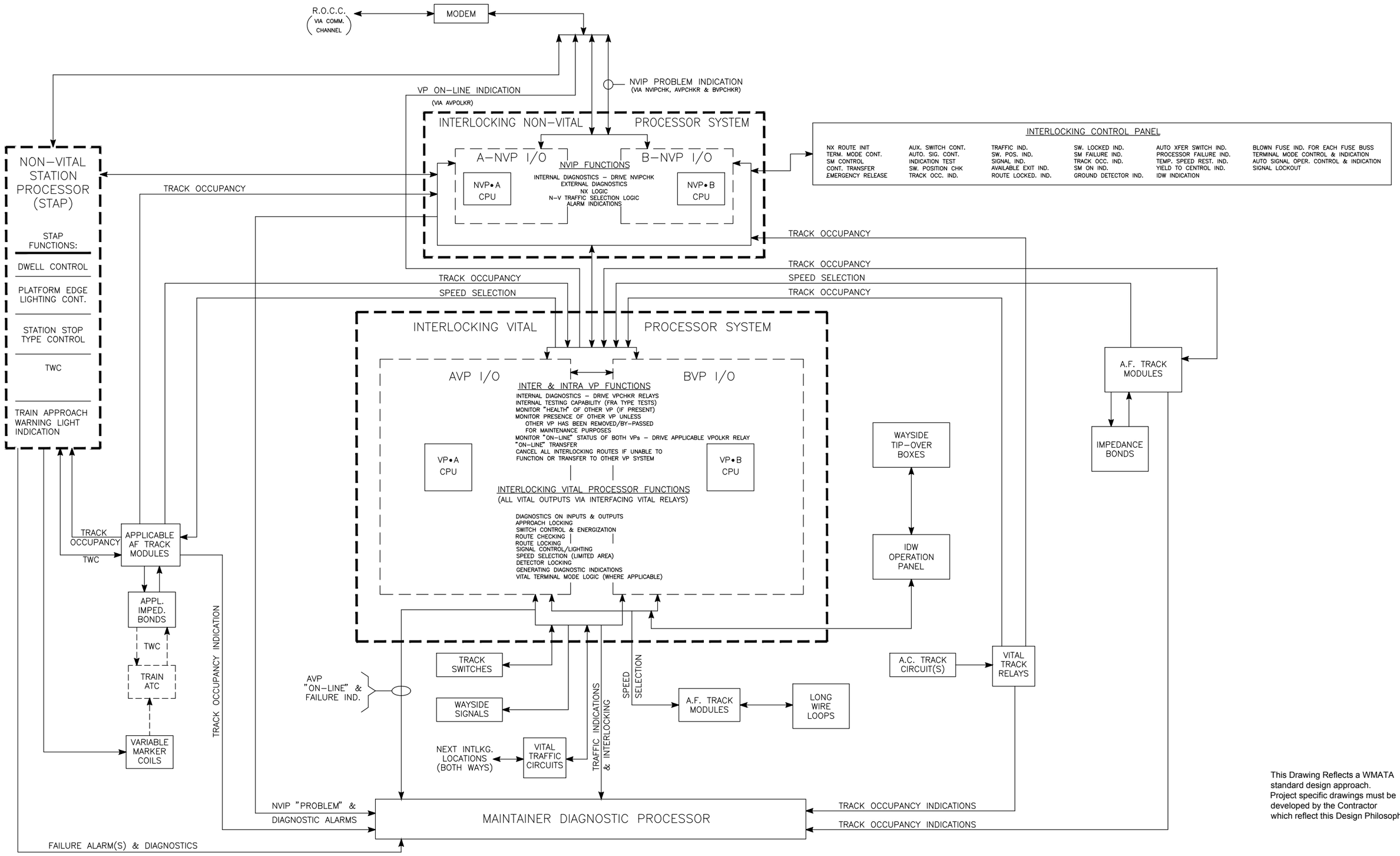

This Drawing Reflects a WMATA standard design approach. Project specific drawings must be developed by the Contractor which reflect this Design Philosophy

DESIGNED	GAH	06-00 DATE
DRAWN	JMR	06-00 DATE
CHECKED		DATE
APPROVED		DATE

REFERENCE DRAWINGS

NUMBER	DESCRIPTION

REVISIONS

DATE	BY	DESCRIPTION
08/2000	SYSP	REVISED AND ISSUED BY THE AUTHORITY
02/10/2017	MM	REVISED FOR FQ15192

WASHINGTON METROPOLITAN AREA TRANSIT AUTHORITY

DEPARTMENT OF TRANSIT INFRASTRUCTURE AND ENGINEERING SERVICES
OFFICE OF THE CHIEF ENGINEER, INFRASTRUCTURE

SUBMITTED DATE

APPROVED CHIEF ENGINEER DATE

INTERLOCKING VITAL PROCESSOR SYSTEM
FUNCTION BLOCK DIAGRAM

SCALE

DRAWING NO. ST-ATC-IEQ-021

SHEET NO.

WMATA

TYPICAL POWER DRAWINGS

BOOK OF PLANS

This Drawing Reflects a WMATA standard design approach. Project specific drawings must be developed by the Contractor which reflect this Design Philosophy

DESIGNED	GAH	6-00 DATE
DRAWN	JMR	6-00 DATE
CHECKED		DATE
APPROVED		DATE
UPDATED		DATE

REFERENCE DRAWINGS

NUMBER	DESCRIPTION

REVISIONS

DATE	BY	DESCRIPTION
08/2001	SYSP	Revised and issued by the Authority

WASHINGTON METROPOLITAN AREA TRANSIT AUTHORITY

DEPARTMENT OF TRANSIT SYSTEM DEVELOPMENT
OFFICE OF SYSTEMS

SUBMITTED _____ DATE

APPROVED _____ DIRECTOR May 3, 2001 DATE

TYPICAL POWER DRAWINGS

SCALE NONE

DRAWING NO. ST-ATC-PWR-000

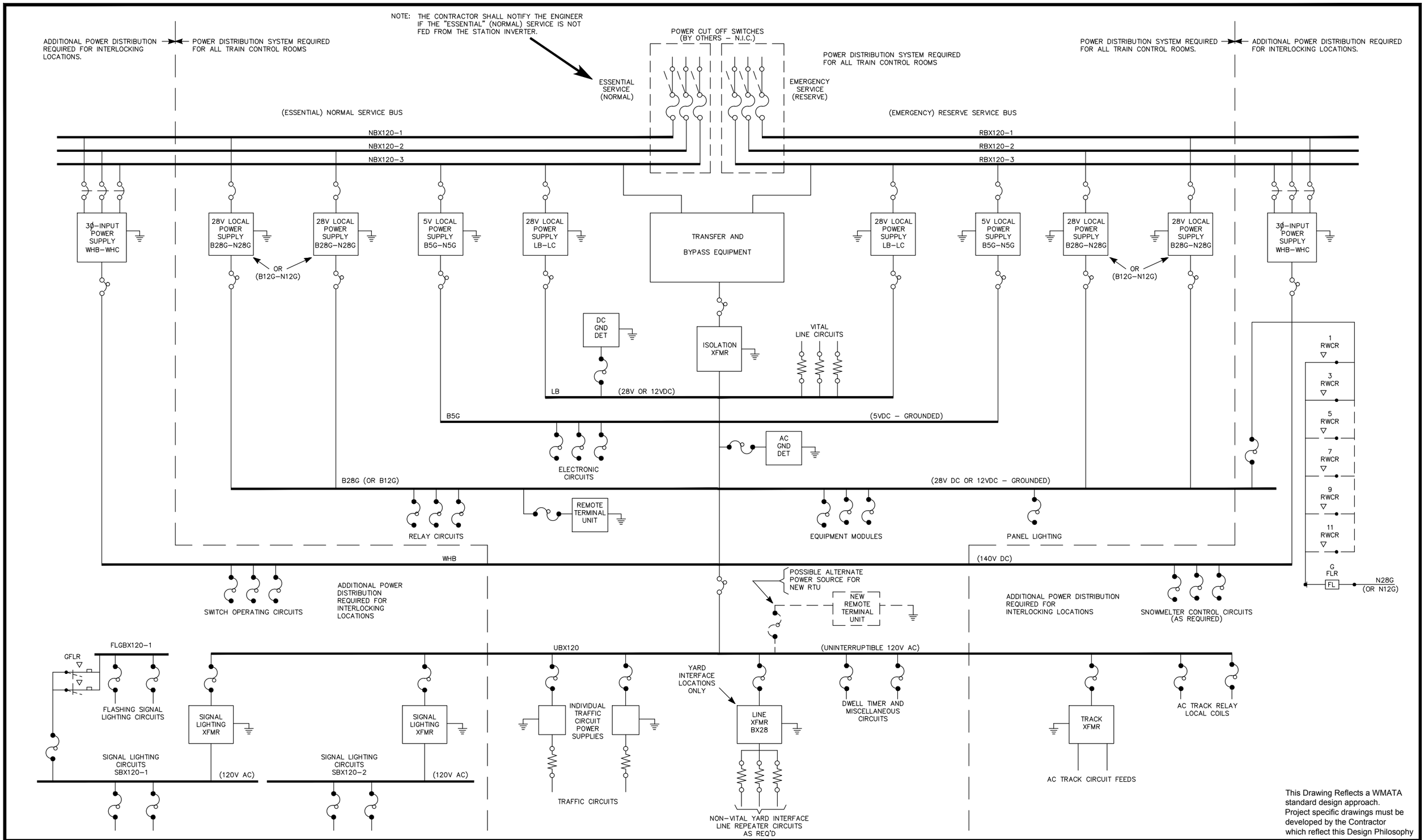

This Drawing Reflects a WMATA standard design approach. Project specific drawings must be developed by the Contractor which reflect this Design Philosophy

DESIGNED	GAH	6–00 DATE
DRAWN	JMR	6–00 DATE
CHECKED		DATE
APPROVED		DATE
UPDATED		DATE

REFERENCE DRAWINGS

NUMBER	DESCRIPTION

REVISIONS

DATE	BY	DESCRIPTION
08/2001	SYSP	Revised and issued by the Authority

WASHINGTON METROPOLITAN AREA TRANSIT AUTHORITY

DEPARTMENT OF TRANSIT SYSTEM DEVELOPMENT
OFFICE OF SYSTEMS

SUBMITTED _____ DATE

APPROVED _____ DIRECTOR — May 3, 2001 DATE

TYPICAL POWER DISTRIBUTION SCHEMATIC FOR TCRS

SCALE: NONE

DRAWING NO. ST–ATC–PWR–001

NOTES:

1. TWO IDENTICAL SUPPLIES FROM PHASE 1 & 2 OR ONE 3-PHASE INPUT SUPPLY.
2. CONNECT TCR PRIME GROUND BUS BAR TO CABLE FROM POWER SOURCE GROUND IN AC SVC ROOM. THIS CABLE PROVIDED BY OTHERS.
3. ⏚ CASE GROUNDED TO RACK.
4. ONE 3-PHASE INPUT SUPPLY OR THREE SINGLE-PHASE INPUT SUPPLIES, ONE FED FROM EACH INPUT PHASE.
5. THE CONTRACTOR SHALL NOTIFY THE ENGINEER IF THE "ESSENTIAL" (NORMAL) SOURCE IS NOT FED FROM THE STATION INVERTER.

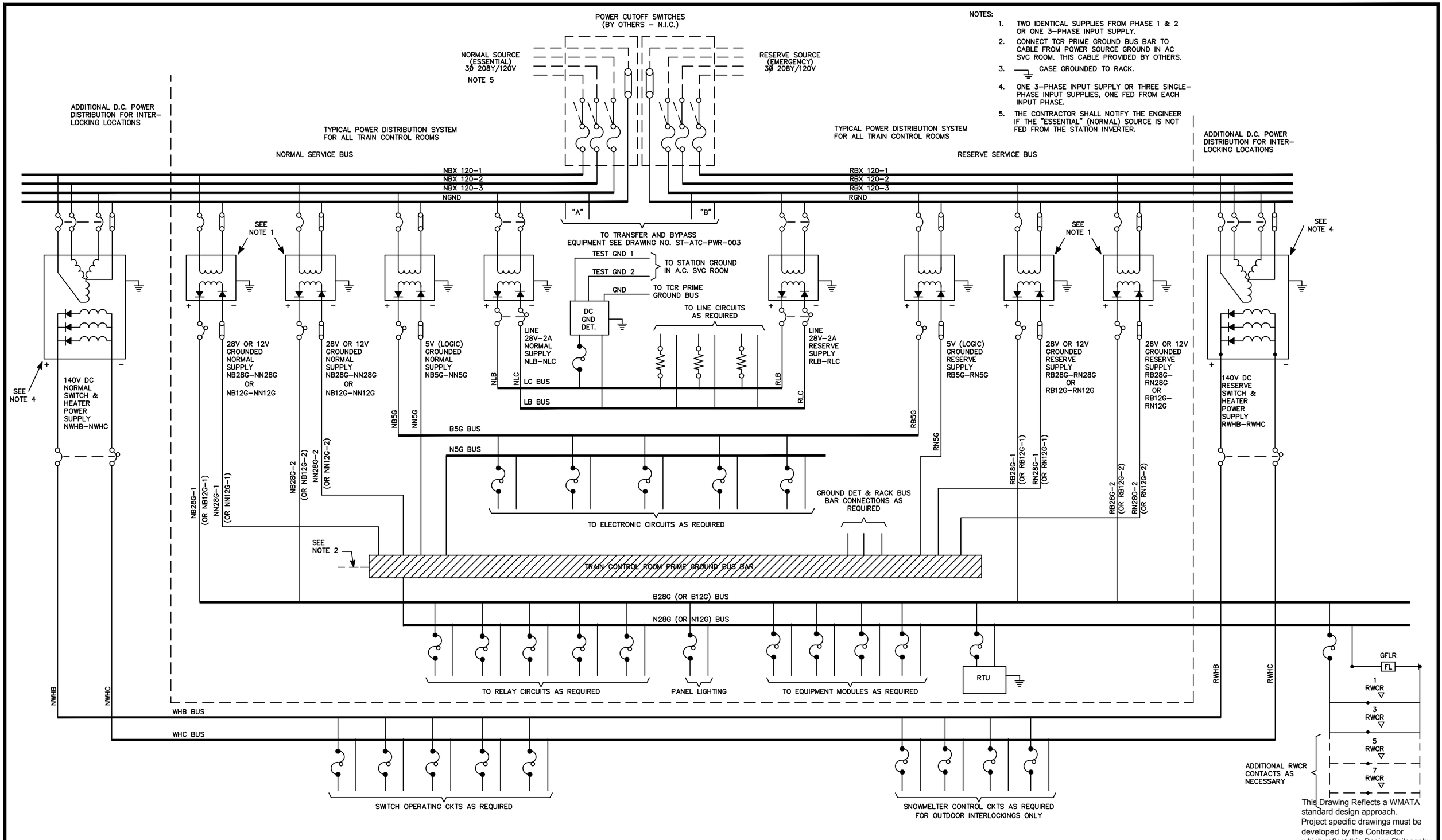

This Drawing Reflects a WMATA standard design approach. Project specific drawings must be developed by the Contractor which reflect this Design Philosophy

DESIGNED	GAH	6-00 DATE
DRAWN	JMR	6-00 DATE
CHECKED		DATE
APPROVED		DATE
UPDATED		DATE

REFERENCE DRAWINGS

NUMBER	DESCRIPTION

REVISIONS

DATE	BY	DESCRIPTION
08/2001	SYSP	Revised and issued by the Authority

WASHINGTON METROPOLITAN AREA TRANSIT AUTHORITY

DEPARTMENT OF TRANSIT SYSTEM DEVELOPMENT
OFFICE OF SYSTEMS

SUBMITTED _____ DATE

APPROVED _____ DIRECTOR — May 3, 2001 DATE

TYPICAL DC POWER DISTRIBUTION

SCALE: NONE

DRAWING NO. ST-ATC-PWR-002

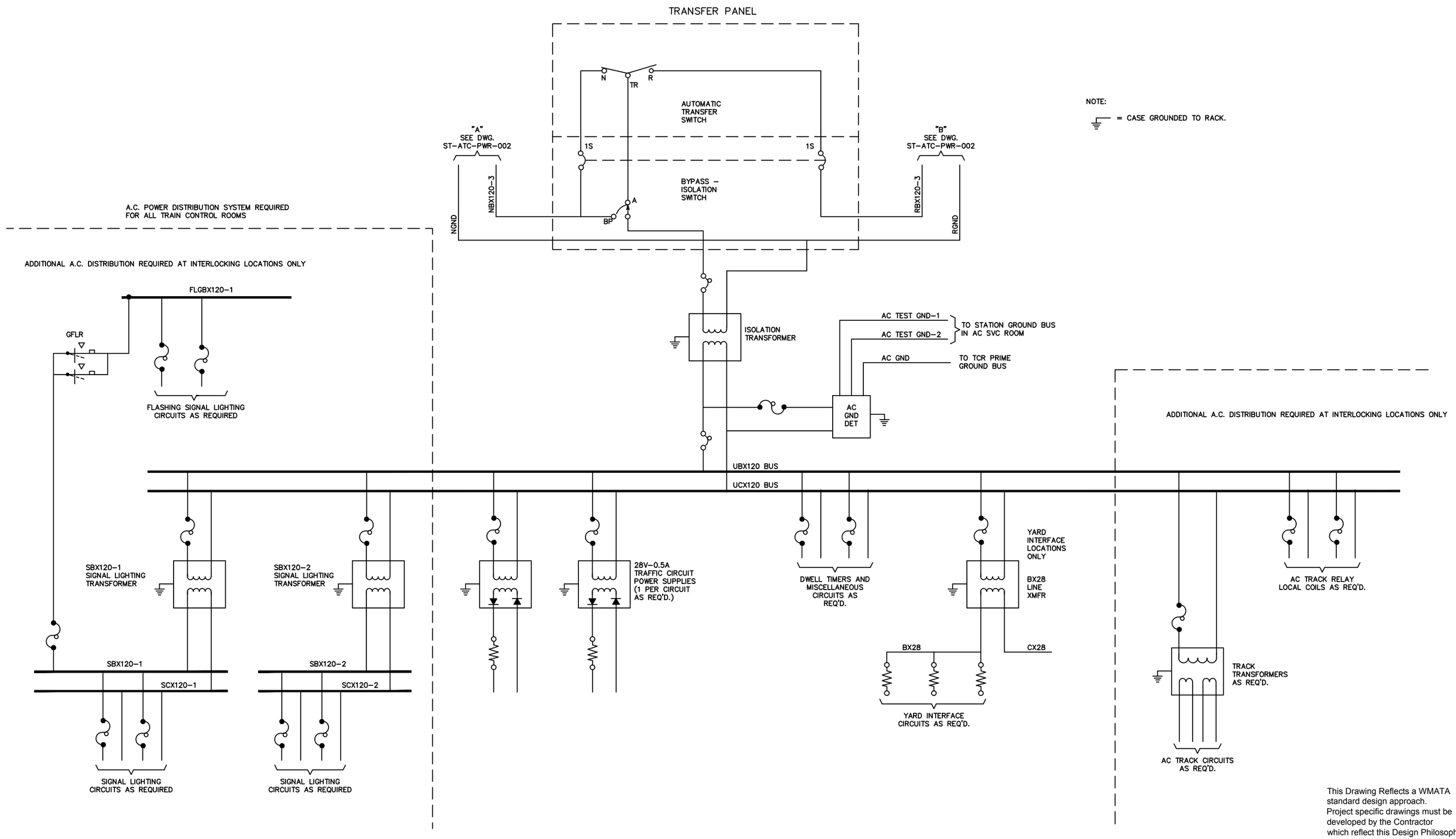

This Drawing Reflects a WMATA standard design approach. Project specific drawings must be developed by the Contractor which reflect this Design Philosophy

DESIGNED	GAH	6-00 DATE
DRAWN	JMR	6-00 DATE
CHECKED		DATE
APPROVED		DATE
UPDATED		DATE

REFERENCE DRAWINGS

NUMBER	DESCRIPTION

REVISIONS

DATE	BY	DESCRIPTION
08/2001	SYSP	Revised and issued by the Authority

WASHINGTON METROPOLITAN AREA TRANSIT AUTHORITY

DEPARTMENT OF TRANSIT SYSTEM DEVELOPMENT
OFFICE OF SYSTEMS

SUBMITTED _____ DATE

APPROVED _____ DIRECTOR May 3, 2001 DATE

TYPICAL UNINTERRUPTIBLE AC POWER DISTRIBUTION

SCALE: NONE

DRAWING NO. ST-ATC-PWR-003

NOTES:

1. THE FOLLOWING IS THE B28G BLOWN FUSE NOMENCLATURE:
   P – POWER RACKS
   C – STATION SUPPORT RACKS
   E – ENTRANCE RACKS
   T – SPEED COMMAND LOGIC RACKS
   TM– ATP TRACK MODULE RACKS
   B – VITAL INTERLOCKING SUPPORT RACKS
   J – NON–VITAL INTERLOCKING SUPPORT RACKS
2. ADD ELECTRICAL INDICATING CIRCUIT BREAKERS TO THE CIRCUIT POWER FAILURE CIRCUIT AS NECESSARY FOR ALL NON–VITAL INTERLOCKING PROCESSOR POWER SUPPLIES, NON–VITAL STATION PROCESSOR POWER SUPPLIES, AND OTHER SPECIAL ENERGY SUPPLY MODULES, AS APPLICABLE.
3. ADD BLOWN FUSE INDICATING DEVICES TO BLOWN FUSE INDICATION CIRCUIT AS NECESSARY TO INCLUDE ALL SPECIAL ENERGY BUSES.

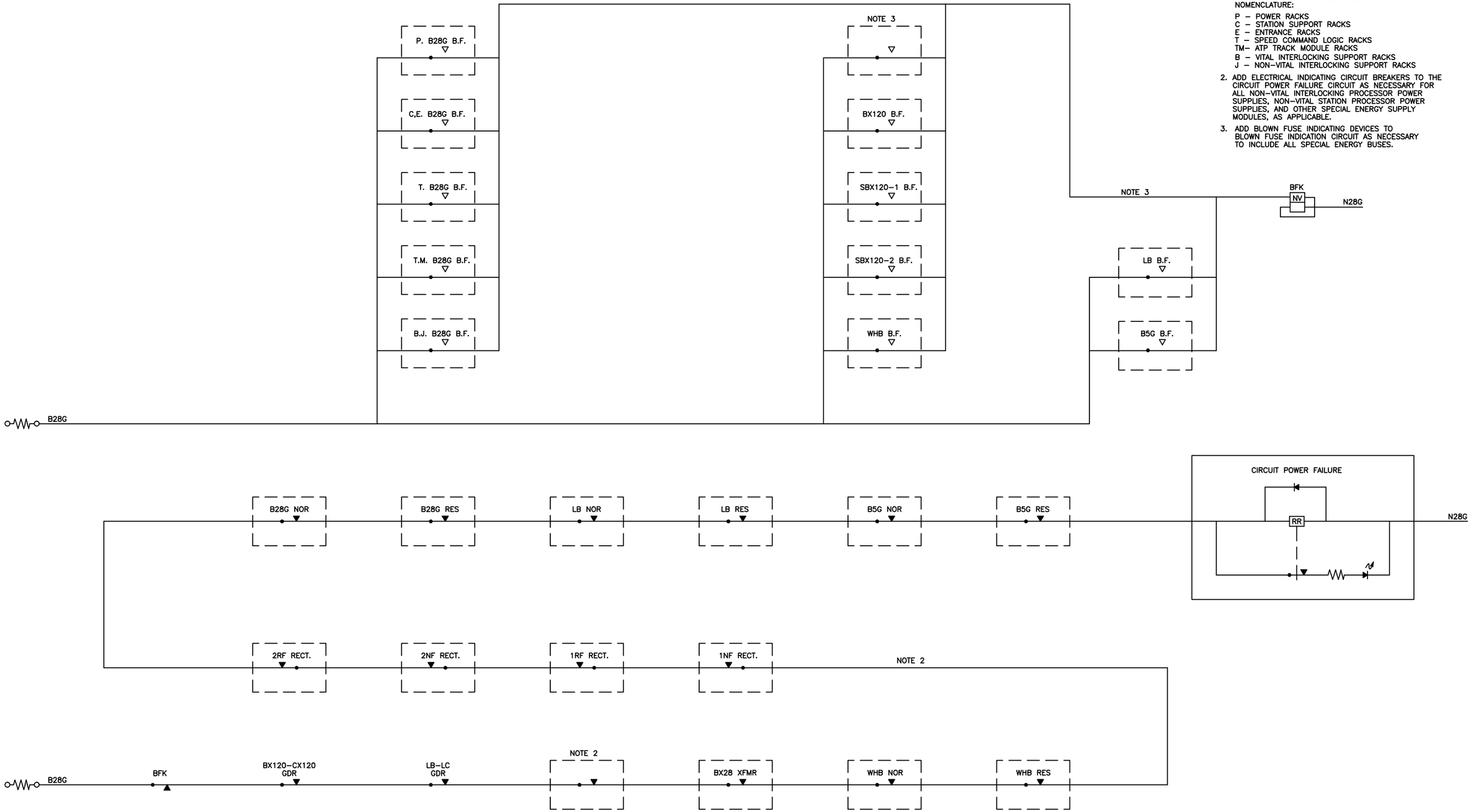

This Drawing Reflects a WMATA standard design approach. Project specific drawings must be developed by the Contractor which reflect this Design Philosophy

DESIGNED	GAH	6–00 DATE
DRAWN	JMR	6–00 DATE
CHECKED		DATE
APPROVED		DATE
UPDATED		DATE

REFERENCE DRAWINGS

NUMBER	DESCRIPTION

REVISIONS

DATE	BY	DESCRIPTION
08/2001	SYSP	Revised and issued by the Authority

WASHINGTON METROPOLITAN AREA TRANSIT AUTHORITY

DEPARTMENT OF TRANSIT SYSTEM DEVELOPMENT
OFFICE OF SYSTEMS

SUBMITTED _____ DATE

APPROVED _____ DIRECTOR May 3, 2001 DATE

TYPICAL POWER FAILURE & BLOWN FUSE CIRCUITS (STATIONS WITH INTERLOCKING)

SCALE: NONE

DRAWING NO. ST–ATC–PWR–005

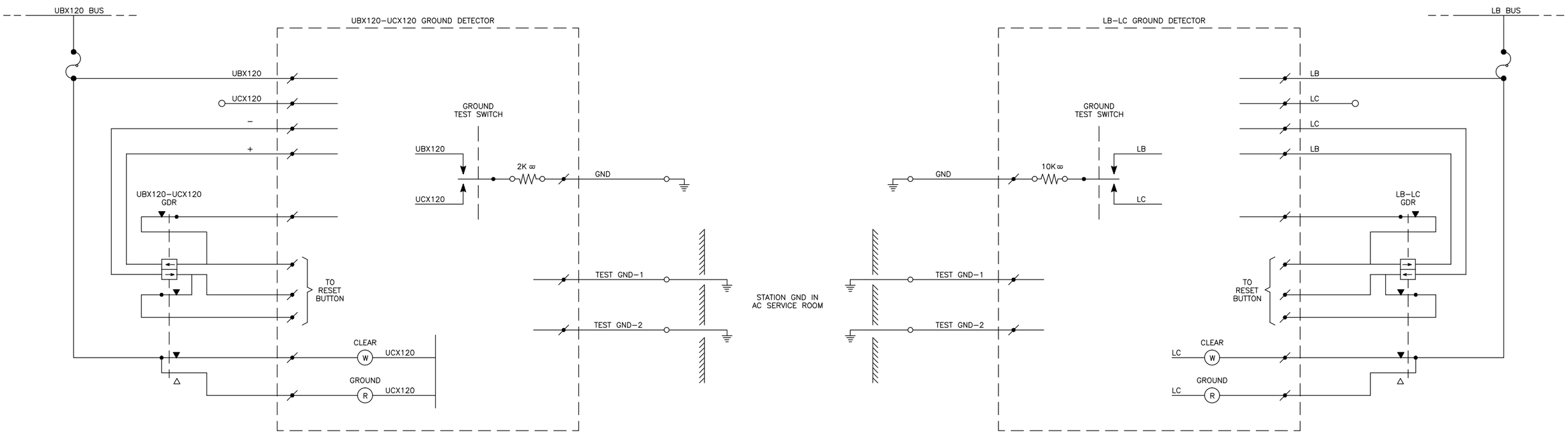

This Drawing Reflects a WMATA standard design approach. Project specific drawings must be developed by the Contractor which reflect this Design Philosophy

DESIGNED	GAH	6–00 DATE
DRAWN	JMR	6–00 DATE
CHECKED		DATE
APPROVED		DATE
UPDATED		DATE

REFERENCE DRAWINGS

NUMBER	DESCRIPTION

REVISIONS

DATE	BY	DESCRIPTION
08/2001	SYSP	Revised and issued by the Authority

WASHINGTON METROPOLITAN AREA TRANSIT AUTHORITY

DEPARTMENT OF TRANSIT SYSTEM DEVELOPMENT
OFFICE OF SYSTEMS

SUBMITTED _____ DATE

APPROVED DIRECTOR _____ May 3, 2001 DATE

TYPICAL GROUND DETECTOR CIRCUITS

SCALE NONE

DRAWING NO. ST–ATC–PWR–006

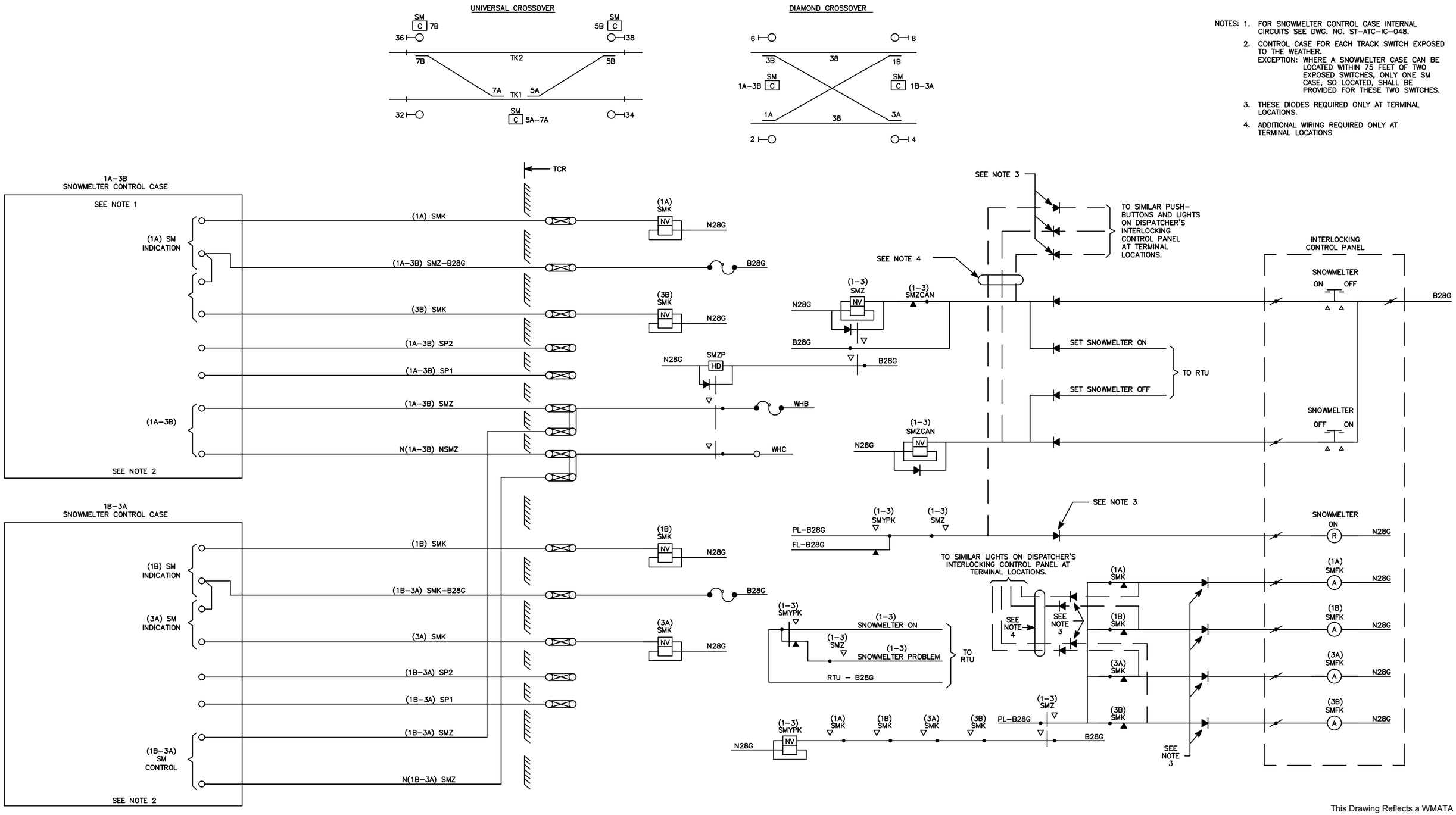

NOTES:
1. FOR SNOWMELTER CONTROL CASE INTERNAL CIRCUITS SEE DWG. NO. ST–ATC–IC–048.
2. CONTROL CASE FOR EACH TRACK SWITCH EXPOSED TO THE WEATHER.
   EXCEPTION: WHERE A SNOWMELTER CASE CAN BE LOCATED WITHIN 75 FEET OF TWO EXPOSED SWITCHES, ONLY ONE SM CASE, SO LOCATED, SHALL BE PROVIDED FOR THESE TWO SWITCHES.
3. THESE DIODES REQUIRED ONLY AT TERMINAL LOCATIONS.
4. ADDITIONAL WIRING REQUIRED ONLY AT TERMINAL LOCATIONS

This Drawing Reflects a WMATA standard design approach. Project specific drawings must be developed by the Contractor which reflect this Design Philosophy

Path: G:\CADD\Wmata\csi–r14\train control\
Name: ATCCSI–P–007.dwg
Date: 03/05/01 Time: 12:44:56

		DATE
DESIGNED	GAH	6–00
DRAWN	JMR	6–00
CHECKED		
APPROVED		
UPDATED		

REFERENCE DRAWINGS

NUMBER	DESCRIPTION

REVISIONS

DATE	BY	DESCRIPTION
08/2001	SYSP	Revised and issued by the Authority

WASHINGTON METROPOLITAN AREA TRANSIT AUTHORITY

DEPARTMENT OF TRANSIT SYSTEM DEVELOPMENT
OFFICE OF SYSTEMS

SUBMITTED — DATE

APPROVED — DIRECTOR — May 3, 2001 DATE

TYPICAL SNOWMELTER CONTROL & INDICATION CIRCUITS

SCALE: NONE

DRAWING NO. ST–ATC–PWR–007

DESIGN DRAWINGS

DESIGNED	ACC	03-02-2017 DATE
DRAWN	DMR	03-02-2017 DATE
CHECKED		DATE
APPROVED		DATE

REFERENCE DRAWINGS

NUMBER	DESCRIPTION

REVISIONS

DATE	BY	DESCRIPTION
03/02/2017	MM	CREATED FOR CONTRACT FQ15192

WASHINGTON METROPOLITAN TRANSIT AUTHORITY

DEPARTMENT OF TRANSIT INFRASTRUCTURE AND ENGINEERING SERVICES
OFFICE OF THE CHIEF ENGINEER, INFRASTRUCTURE

SUBMITTED _____ DATE

APPROVED _____ DIRECTOR DATE

COVER PAGE
DESIGN DRAWINGS

SCALE

DRAWING NO. DD-ATC-CND-000

SHEET NO.

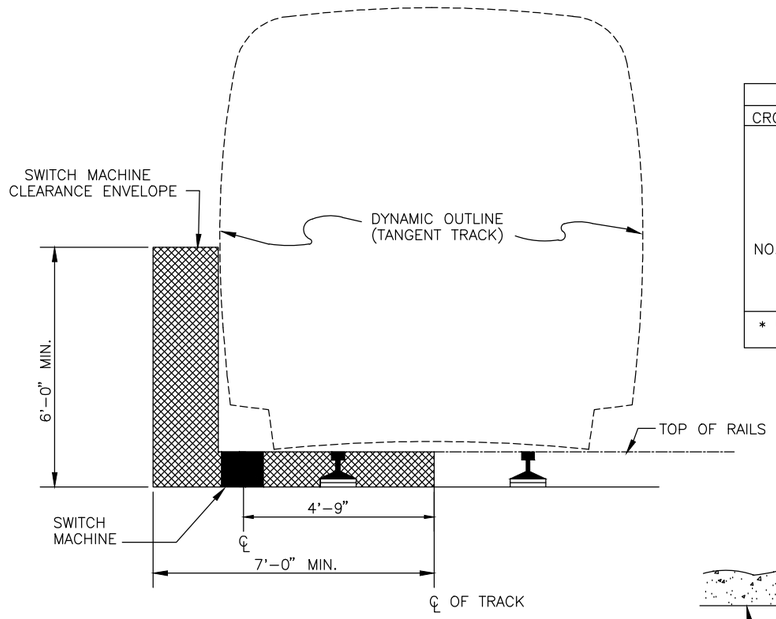

SECTION A-A

TABLE	
CROSSOVERS	DISTANCE TO PS.*
NO. 8	44 FEET
NO. 10	49 FEET
NO. 15	65 FEET
NO. 6 EQUIL	35 FEET
* OFFSET FRE CONDUITS 1'-0" ON 14'-0" TRACK CENTERS	

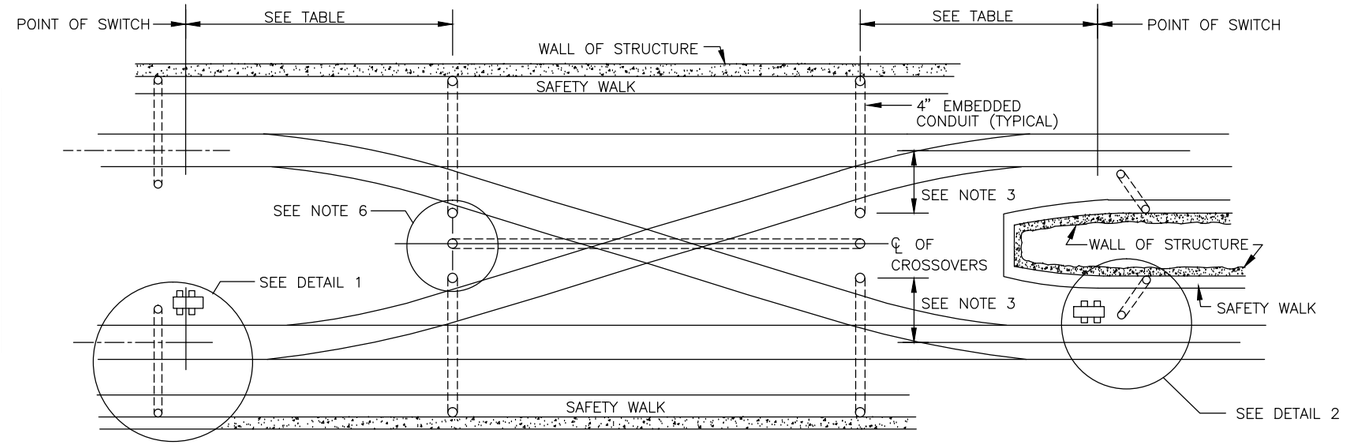

PLAN 2

EMBEDDED CONDUIT ARRANGEMENT-TUNNEL INSTALLATION
ALL TRACK CENTERS

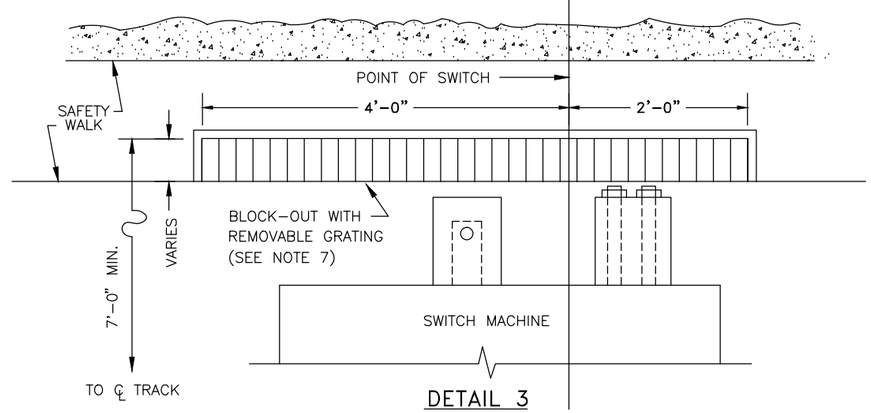

DETAIL 3

BLOCK-OUT AND GRATING TO
PROVIDE SWITCH ROD CLEARANCE

NOTES

1. ALL CONDUITS ARE TO BE 4" FRE.
2. CONDUITS STUBBING THROUGH THE INVERT SHALL BE PLUMB AND FLUSH. CONDUITS STUBBING UP THROUGH THE SAFETY WALK SHALL TERMINATE 1/2" ABOVE THE SURFACE AND 3 1/2" FROM CENTERLINE OF CONDUIT TO THE TUNNEL WALL. ALL CONDUIT ENDS SHALL BE TEMPORARILY PLUGGED.
3. THE DIMENSION BETWEEN CONDUIT STUB-UP AND THE CENTERLINE OF TRACK IS TO BE 6'-9" FOR 14'-0" TRACK CENTERS AND 7'-9" FOR ALL OTHERS.
4. WHERE DISTANCE BETWEEN CENTERLINE OF INVERT STUB-UP AND STRUCTURAL WALL IS LESS THAN 4 FEET, SAFETY WALK STUB-UP TO BE OFFSET IN DIRECTION OF NEAREST TRAIN CONTROL ROOM TO ACCOMMODATE BENDING RADIUS OF CONDUITS
5. SEE REFERENCE DRAWINGS FOR ADDITIONAL TRAIN CONTROL CONDUIT REQUIREMENTS WITHIN THIS AREA.
6. CONDUITS STUBBING UP THROUGH FLOATING SLAB SHALL BE IN ACCORDANCE WITH DETAIL 'B' ON DD-S-67, IF ISSUED.
7. WHERE NECESSARY FOR SWITCH ROD CLEARANCE, PROVIDE A BLOCK-OUT WITH REMOVABLE GRATING IN SAFETY WALK.

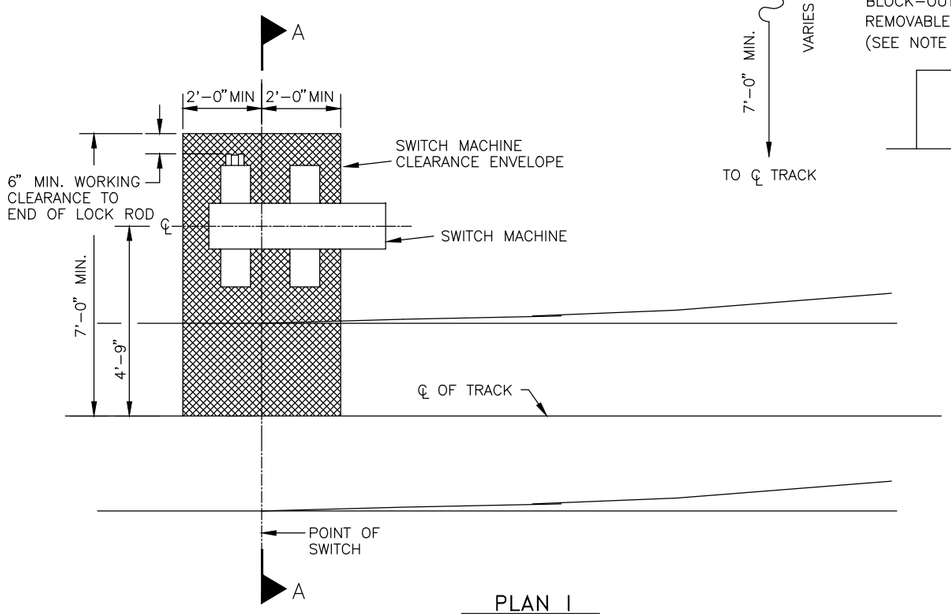

PLAN 1

CLEARANCE ENVELOPE
BALLASTED AND DIRECT FIXATION TRACK

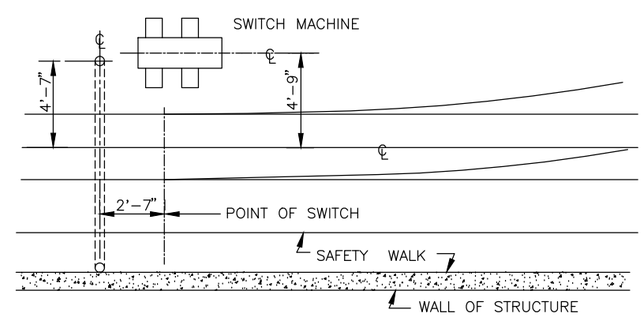

DETAIL 1

CONDUIT ARRANGEMENT WITH SWITCH MACHINE
ON SIDE OPPOSITE THE SAFETY WALK

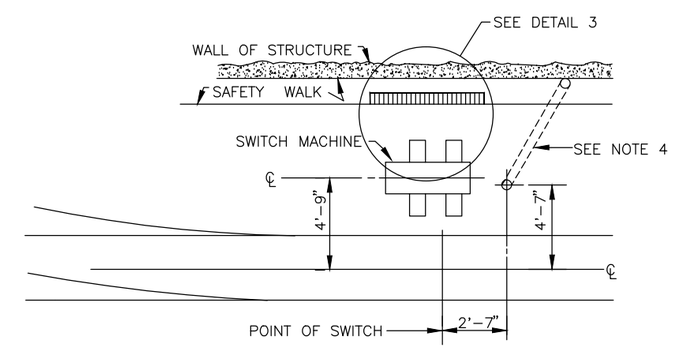

DETAIL 2

CONDUIT ARRANGEMENT WITH SWITCH MACHINE
ON SAME SIDE AS THE SAFETY WALK

DESIGNED	DE FRANCESCO	2-76 DATE
DRAWN	BRANDENBERG	2-76 DATE
CHECKED	BRASSFIELD	2-76 DATE
APPROVED	ONEIL	2-76 DATE
UPDATED	GANERIWAL	9-98 DATE

REFERENCE DRAWINGS

NUMBER	DESCRIPTION
ST-TC-2	EMBEDDED CONDUIT ARRANGEMENT
DD-TC-33	TYPICAL TC CONDUITS FOR PASSENGER STA.

REVISIONS

DATE	BY	DESCRIPTION
08/2001	SYSP	Revised and issued by the Authority
02/14/17	MM	REPLACED PVC CONDUIT WITH FRE

WASHINGTON METROPOLITAN AREA TRANSIT AUTHORITY

DEPARTMENT OF TRANSIT SYSTEM DEVELOPMENT
OFFICE OF SYSTEMS

SUBMITTED DATE

APPROVED DIRECTOR May 3, 2001 DATE

TRAIN CONTROL DESIGN DRAWING
SWITCH MACHINE CLEARANCE AND
TUNNEL CONDUIT REQUIREMENTS

SCALE NOT TO SCALE

DRAWING NO. DD-ATC-CND-003

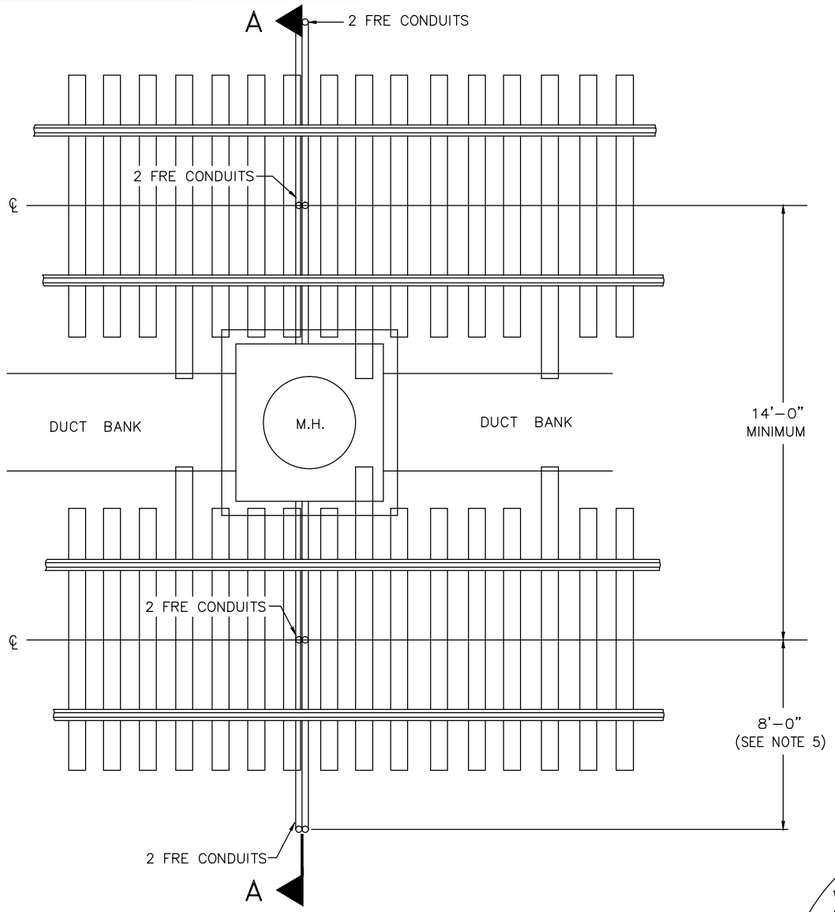

PLAN

NOTES

1. IN AT–GRADE TRACK AREAS, MANHOLES ARE TO BE PROVIDED AT 400 FT. MAXIMUM SPACING AND WITHIN 50 FT. OF ALL CROSSOVERS AND TURNOUTS.
2. CONDUITS TO BE PROVIDED AT EVERY MANHOLE, EXCEPT WITHIN STATION LIMITS.
3. ALL CONDUITS TO BE CAPPED AND STAKED. STAKES ARE TO BE PRESERVED THROUGHOUT ALL STAGES OF TRACK CONSTRUCTION.
4. DUCT BANK SIZE AND CONFIGURATION MAY VARY DEPENDING ON FIELD CONDITIONS.
5. IN BALLASTED RETAINED CUT SECTIONS WHERE RETAINING WALLS ARE USED, CONDUIT WILL EXTEND TO 6'–0" FROM TRACK CENTER LINE.
6. ALL CONDUITS SHALL BE 2 1/2", EXCEPT AT MANHOLES WITHIN 50' OF CROSSOVERS AND TURNOUTS WHERE 4" CONDUITS SHALL BE INSTALLED. ALL CONDUITS ARE TO BE FRE UL LISTED OR BETTER.

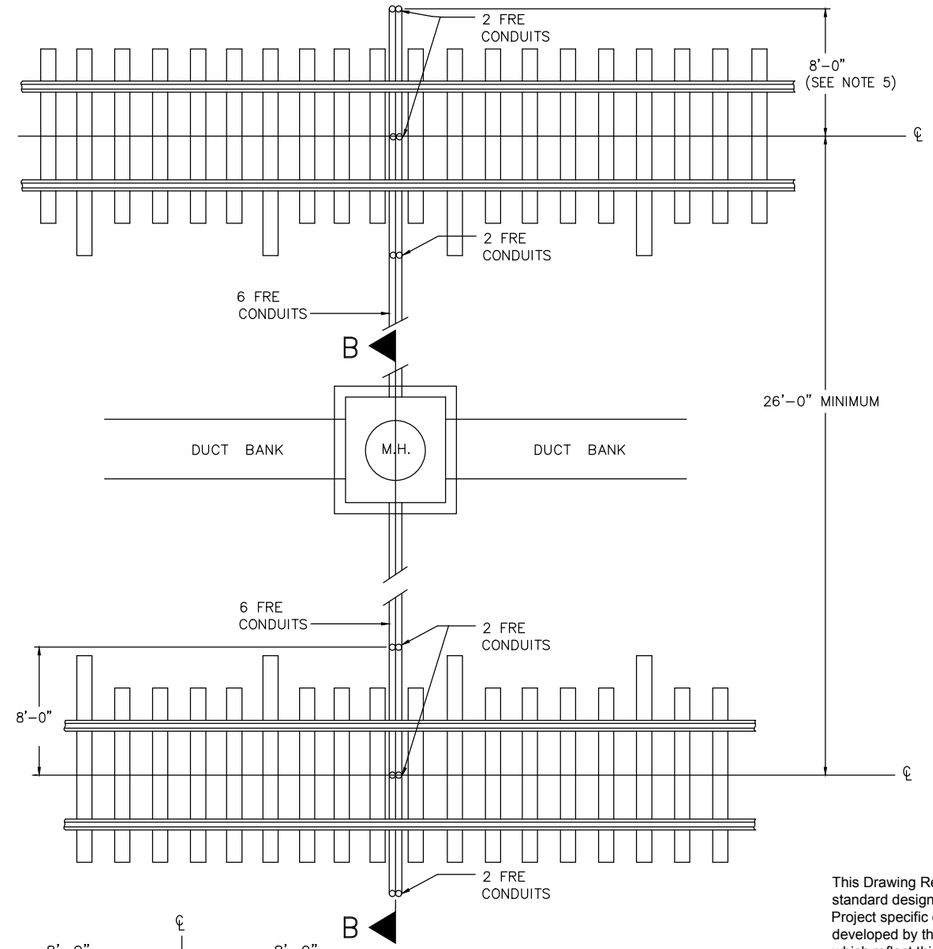

This Drawing Reflects a WMATA standard design approach. Project specific drawings must be developed by the Contractor which reflect this Design Philosophy

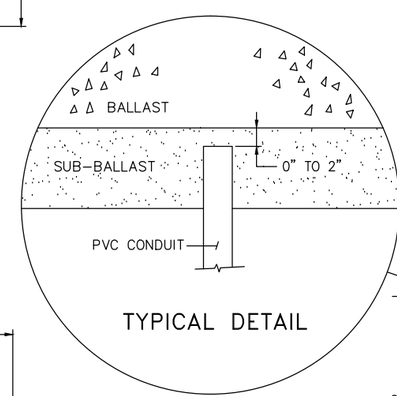

TYPICAL DETAIL

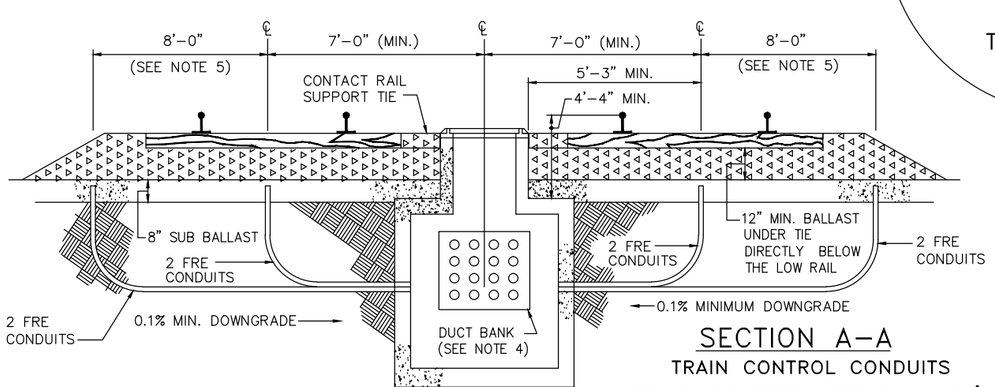

SECTION A–A

TRAIN CONTROL CONDUITS

TRACK CENTERS LESS THAN 26'

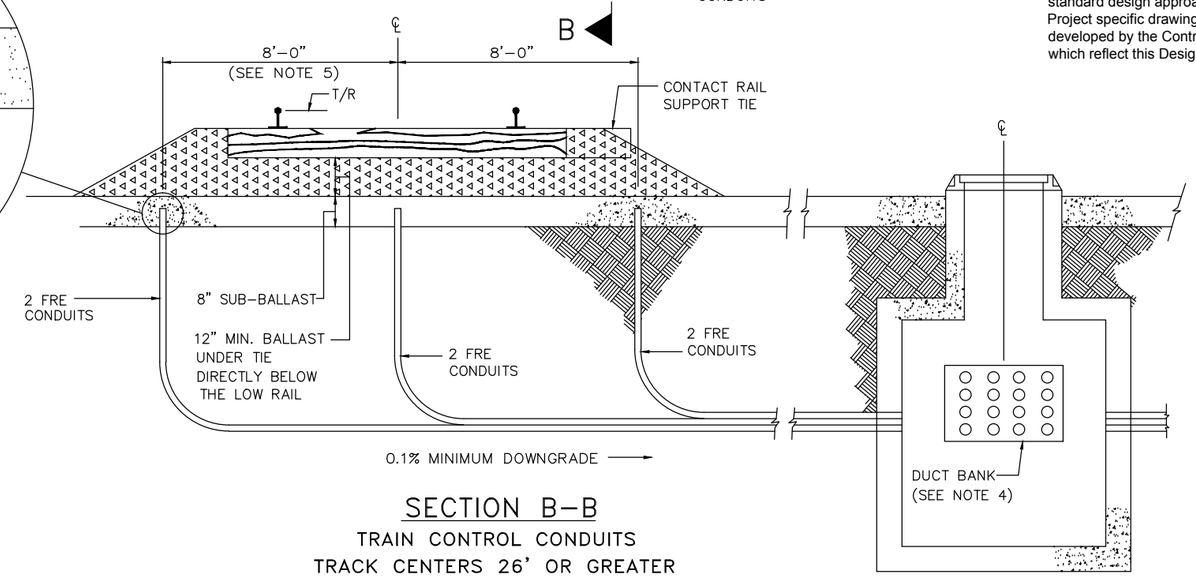

SECTION B–B

TRAIN CONTROL CONDUITS

TRACK CENTERS 26' OR GREATER

DESIGNED	DEFRANCESCO	2–76 DATE
DRAWN	BRANDENBERG	2–76 DATE
CHECKED	BRASSFIELD	7–76 DATE
APPROVED	R. O'NEIL	7–76 DATE
UPDATED	R. GANERIWAL	9–98 DATE

REFERENCE DRAWINGS

NUMBER	DESCRIPTION

REVISIONS

DATE	BY	DESCRIPTION
08/2001	SYSP	Revised and issued by the Authority
02/14/17	MM	REPLACED PVC CONDUIT WITH FRE

WASHINGTON METROPOLITAN AREA TRANSIT AUTHORITY

DEPARTMENT OF TRANSIT SYSTEM DEVELOPMENT
OFFICE OF SYSTEMS

SUBMITTED DATE

APPROVED DIRECTOR May 3, 2001 DATE

TRAIN CONTROL DESIGN DRAWING
TRAIN CONTROL CONDUITS–AT GRADE

SCALE NOT TO SCALE

DRAWING NO. DD–ATC–CND–004

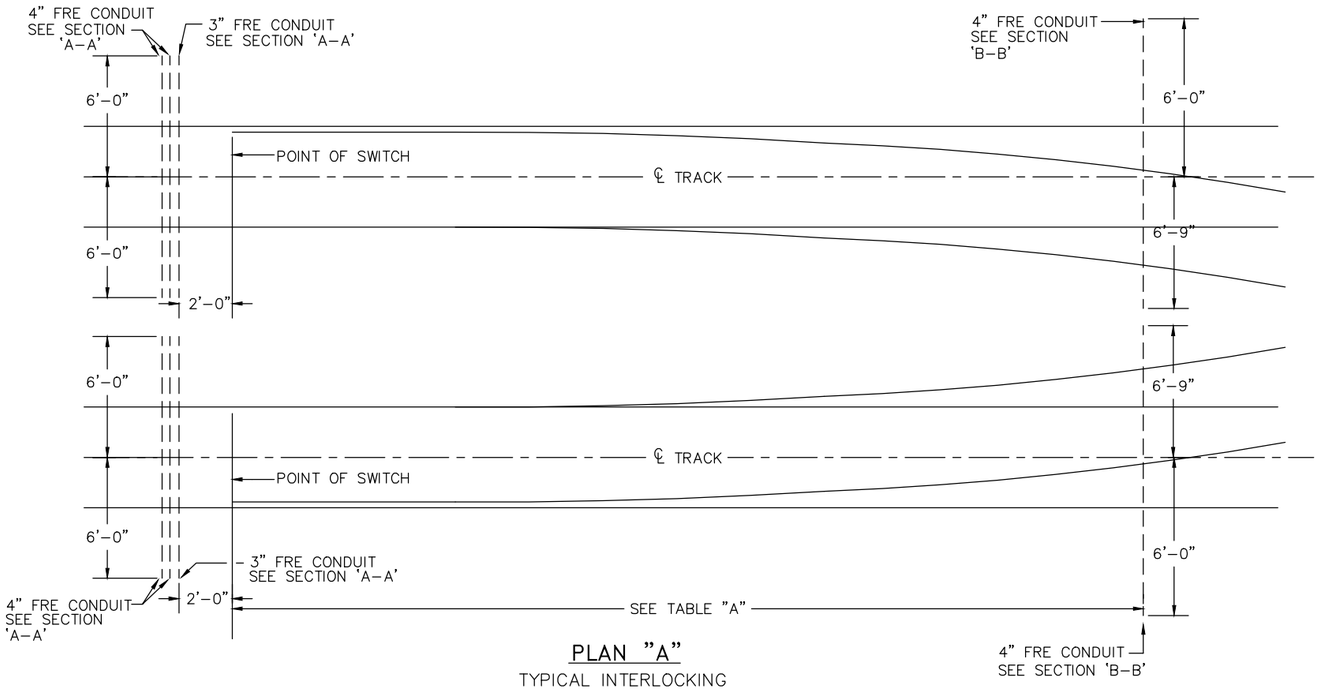

PLAN "A"

TYPICAL INTERLOCKING

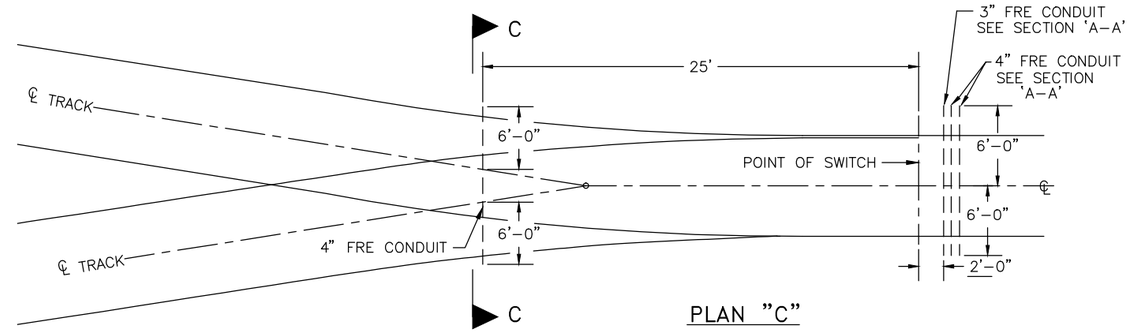

PLAN "C"

NO.6 EQUILATERAL TURNOUT

TABLE "A"	
TURNOUT NUMBER	DISTANCE TO POINT OF SW.
6	35'-0"
8	35'-0"
10	42'-0"
15	70'-0"

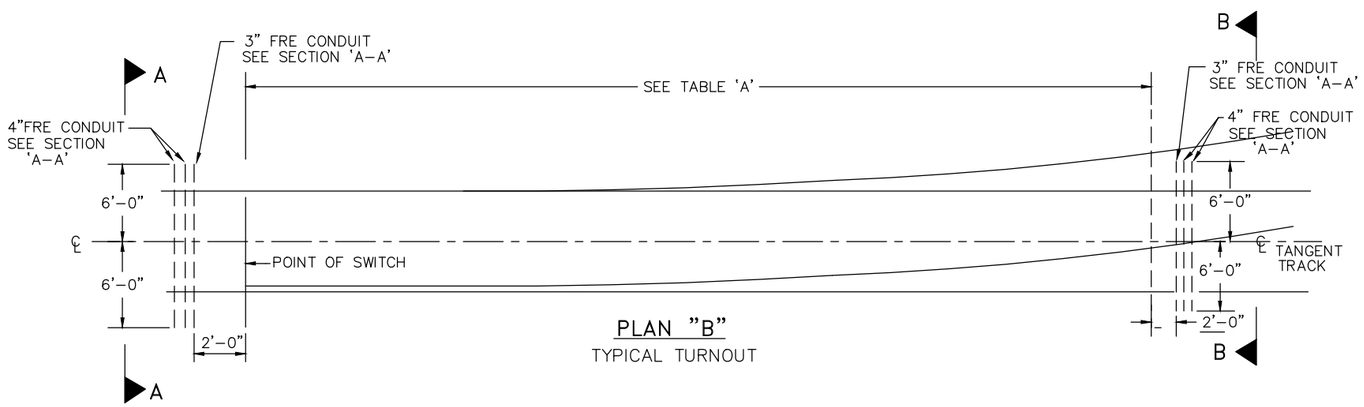

PLAN "B"

TYPICAL TURNOUT

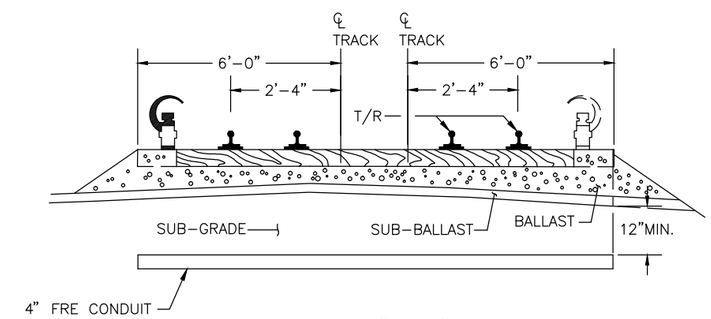

SECTION "C-C"

This Drawing Reflects a WMATA standard design approach. Project specific drawings must be developed by the Contractor which reflect this Design Philosophy

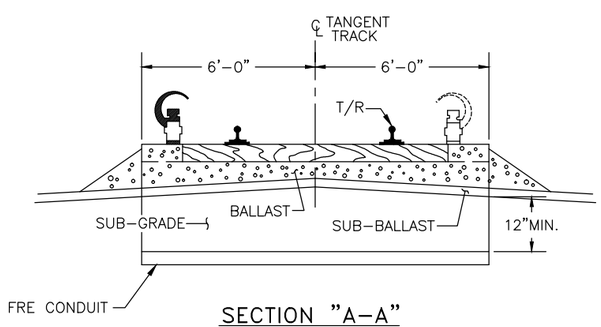

SECTION "A-A"

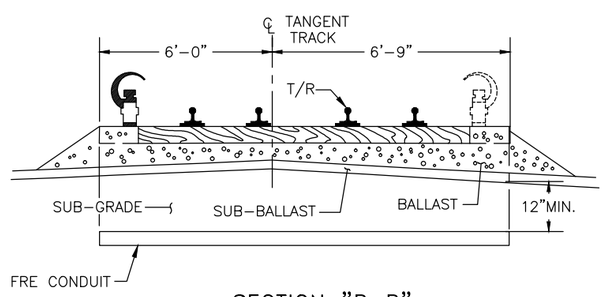

SECTION "B-B"

NOTES:

1. ALL CONDUITS SHALL BE PLUGGED. PROVISIONS SHALL BE MADE (MARKERS, STAKES, ETC.) SUCH THAT CONDUIT LOCATION WILL BE EVIDENT AFTER COMPLETION OF TRACK INSTALLATION.
2. ALL ADJACENT TRACK CROSSING CONDUITS SHALL HAVE A TEN (10) INCH MINIMUM ℄ TO ℄ SEPARATION.
3. THIS DRAWING DOES NOT APPLY TO TURNOUTS AND SWITCHES IN YARDS.
4. ALL CONDUITS SHALL BE FRE, UL APPROVED.

DESIGNED	J. DEFRANCESCO	3-76 DATE
DRAWN	P. BRANDENBERG	6-76 DATE
CHECKED	F. BRASSFIELD	3-77 DATE
APPROVED	T. HANSEN	3-77 DATE
UPDATED	R. GANERIWAL	8-98 DATE

REFERENCE DRAWINGS

NUMBER	DESCRIPTION

REVISIONS

DATE	BY	DESCRIPTION
08/2001	SYSP	Revised and issued by the Authority
02/14/17	MM	REPLACED PVC CONDUIT WITH FRE

WASHINGTON METROPOLITAN AREA TRANSIT AUTHORITY

DEPARTMENT OF TRANSIT SYSTEM DEVELOPMENT
OFFICE OF SYSTEMS

SUBMITTED — DATE

APPROVED — DIRECTOR — May 3, 2001 DATE

TRAIN CONTROL DESIGN DRAWING
CONDUIT REQUIREMENTS FOR TURNOUTS AT GRADE

SCALE: NOT TO SCALE

DRAWING NO. DD-ATC-CND-005

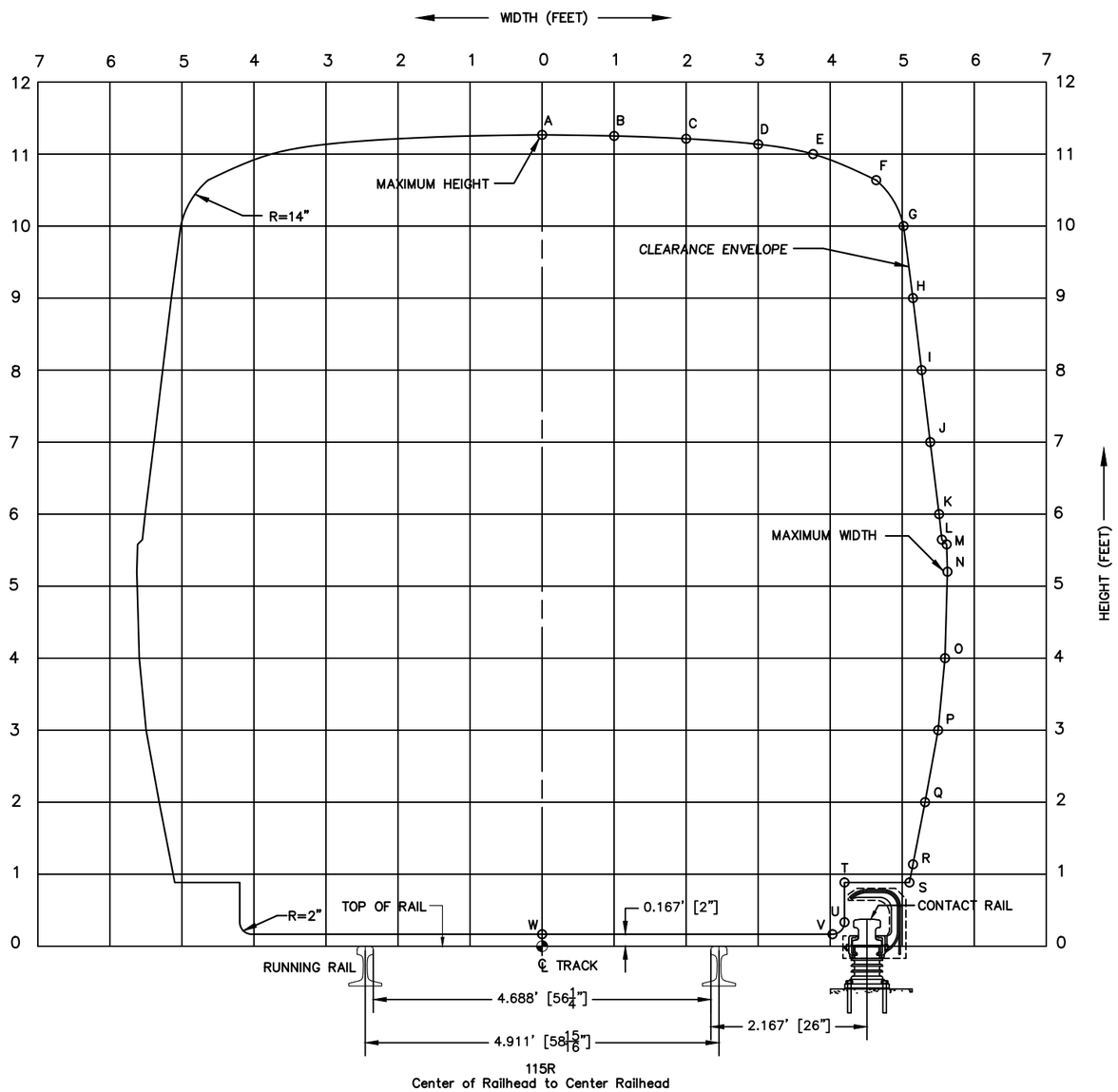

COORDINATES		
POINT	WIDTH	HEIGHT
A	0.000	11.267
B	1.000	11.252
C	2.000	11.213
D	3.000	11.136
E	3.761	11.000
F	4.638	10.638
G	5.018	10.000
H	5.148	9.000
I	5.268	8.000
J	5.388	7.000
K	5.511	6.000
L	5.549	5.646
M	5.616	5.580
N	5.627	5.200
O	5.593	4.000
P	5.498	3.000
Q	5.316	2.000
R	5.149	1.138
S	5.100	0.885
T	4.198	0.885
U	4.198	0.333
V	4.031	0.167
W	0.000	0.167

NOTES:

1. THIS DIAGRAM IS TO BE USED TO VERIFY CLEARANCES TO WAYSIDE FACILITIES AND UNDERCAR FIXTURES. FOR EXAMPLE, FIRELINES, SPECIAL TRACK HARDWARE AND SAFETY WALKS.
2. THIS DIAGRAM DOES NOT APPLY TO PLATFORMS AND MAJOR STRUCTURAL ELEMENTS, SUCH AS TUNNEL WALLS AND CEILINGS, RETAINING WALLS, AND PIERS. USE THE MANUAL OF DESIGN CRITERIA.
3. THIS DIAGRAM IS DIRECTLY APPLICABLE ONLY FOR LEVEL, TANGENT TRACK. USE THE MANUAL OF DESIGN CRITERIA TO COMPENSATE FOR HORIZONTAL CURVATURE, TRACK SUPERELEVATION, AND MOVEMENT THROUGH TURNOUTS AND CROSSOVERS.
4. THIS DIAGRAM AND DIMENSIONS ARE BASED ON THE FOLLOWING:
   a. CAR BODY – THE CLEARANCE CAR FEELER OUTLINE, OR CLEARANCE ENVELOPE. THIS IS THE ROHR CAR MAXIMUM POSSIBLE DYNAMIC OUTLINE PLUS AN ADDITIONAL ALLOWANCE OF 2 INCHES.
   b. UNDERCAR – THE LOWEST POINT OF THE VEHICLE MINIMUM PROJECTED CLEARANCE. THIS IS DEFINED BY THE COLLECTOR PEDESTAL ASSEMBLY OF THE UNDERCARRIAGE. THESE CLEARANCES ARE DEFINED BY THE CLEARANCE ENVELOPE AND SHOULD ALSO ALLOW FOR AN ADDITIONAL 1/2 INCH AVERAGE PERMISSIBLE TOP RAIL WEAR.
   c. CONTACT RAIL – THE RAIL CAR MAXIMUM POSSIBLE DYNAMIC OUTLINE FOR LOWER CAR BODY APPENDAGES.

"PROFESSIONAL CERTIFICATION: I HEREBY CERTIFY THAT THESE DOCUMENTS WERE PREPARED OR APPROVED BY ME, AND THAT I AM A DULY LICENSED ARCHITECT UNDER THE LAWS OF THE DISTRICT OF COLUMBIA."

LICENSE No. _____

EXPIRATION DATE: _____

- DC REGISTER SECTION 3413

DESIGNED		. DATE
DRAWN	A. Bennett	05/13 DATE
CHECKED	D. FALKEN	05/13 DATE

REFERENCE DRAWINGS

NUMBER	TITLE

REVISIONS

DATE	NUM	DESCRIPTION
06/07	01	Revised and Issued by the Authority
05/13	02	Revised and Corrected Graph
		Revised Bottom Vertical Clearance Line
		From Top of Rail
01/15	03	Revised Title Block

WASHINGTON METROPOLITAN AREA TRANSIT AUTHORITY

DEPARTMENT OF TRANSIT INFRASTRUCTURE AND ENGINEERING SERVICES
CENI - TRACK STRUCTURES & FACILITIES

REVISION SUBMITTED _____ DATE

APPROVED _____ DATE
THOMAS ROBINSON
DEPUTY CHIEF ENGINEER

CIVIL STANDARD DRAWING
WMATA RAPID TRANSIT CAR
CLEARANCE ENVELOPE
.

CONTRACT NO.	SCALE	DRAWING NO.	SHEET NO.
FQ-	1" = 1'-0"	ST-C-004	## of .

Xref T:\SURVEY\1_Technical_Information\2_Car_and_Platform_Clearance_Info\2013-04-17_CAD_Revision\WMATA-BORDER-D.dwg

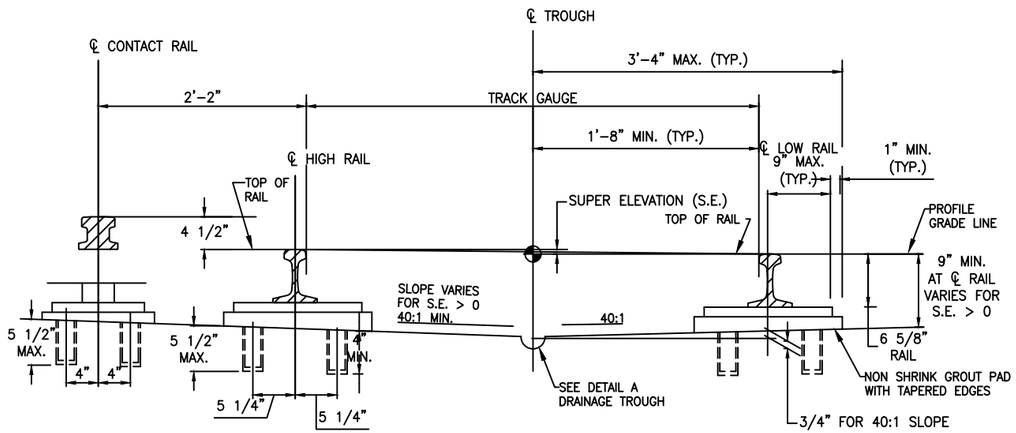

TYPICAL DIRECT FIXATION SECTION TANGENT AND ELEVATED TRACK

0" < S.E. < 3/4"

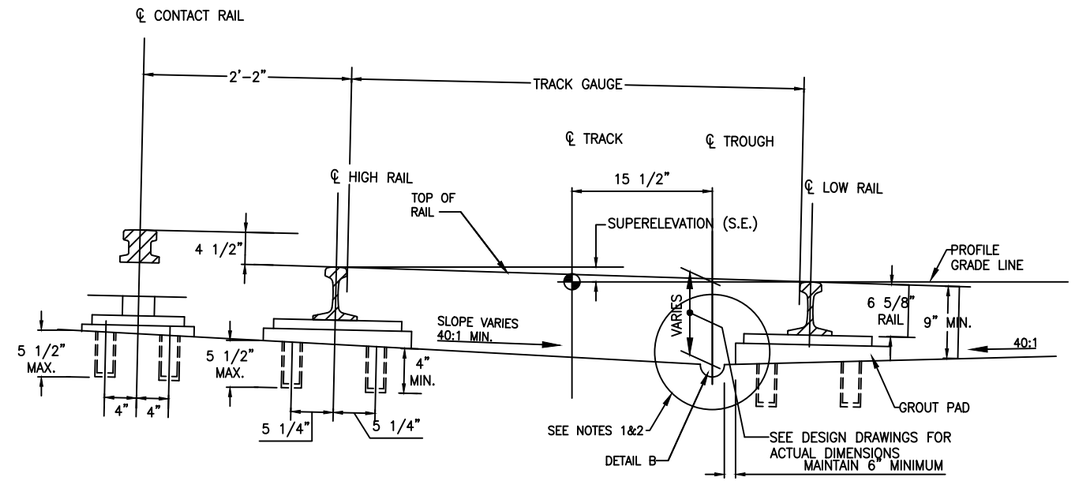

TYPICAL DIRECT FIXATION SECTION SUPERELEVATED TRACK

3/4" < S.E. < 4"

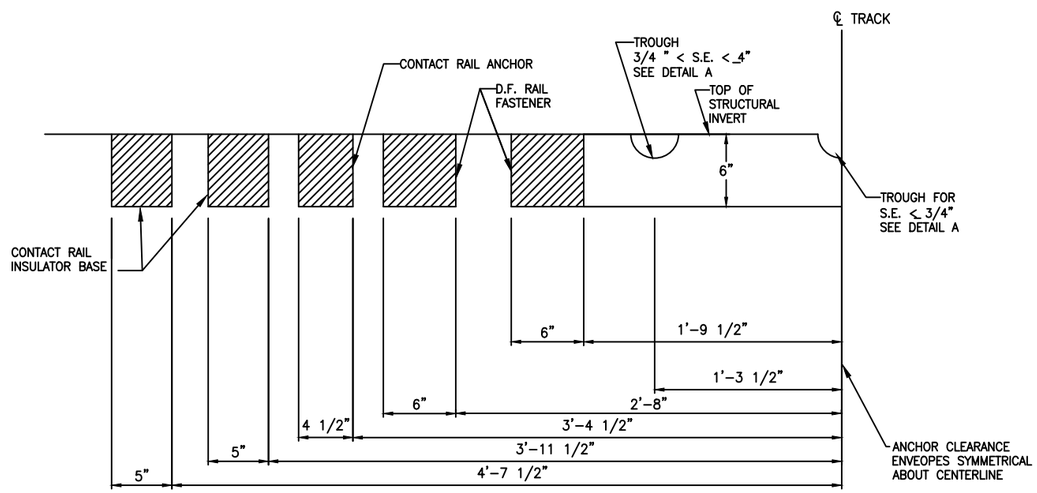

ANCHOR CLEARANCE ENVELOPES

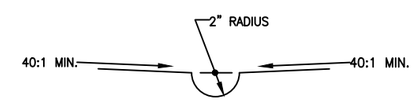

DETAIL A DRAINAGE TROUGH

NOTE:
1. MISALIGNMENT OF DRAINAGE TROUGH SHALL NOT RESULT IN GROUT PAD FILLING TROUGH.
2. THE INVERT AND VERTICAL FACE OF THE GROUT PAD SHALL BE SPACED AT A MINIMUM OFFSET OF 6 INCHES.

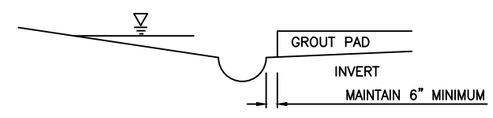

DETAIL B MISALIGNED DRAINAGE TROUGH

LONGITUDINAL REBAR FREE ENVELOPE AT ALL LOCATIONS

"PROFESSIONAL CERTIFICATION: I HEREBY CERTIFY THAT THESE DOCUMENTS WERE PREPARED OR APPROVED BY ME, AND THAT I AM A DULY LICENSED ARCHITECT UNDER THE LAWS OF THE DISTRICT OF COLUMBIA."

LICENSE No. .

EXPIRATION DATE: .

- DC REGISTER SECTION 3413

DESIGNED	.DCCO	1/99 DATE
DRAWN	A. DAVIS	5/05 DATE
CHECKED	RAVI AMIN	12/14 DATE

REFERENCE DRAWINGS

NUMBER	TITLE

REVISIONS

DATE	NUM	DESCRIPTION
08/01	01	Revised & issued by the Authority
08/08	02	Detail Title Revision
12/14	03	Revised Title Block & Changed DD to read ST

WASHINGTON METROPOLITAN AREA TRANSIT AUTHORITY

DEPARTMENT OF TRANSIT INFRASTRUCTURE AND ENGINEERING SERVICES
CENI - TRACK STRUCTURES & FACILITIES

REVISION SUBMITTED DATE

APPROVED THOMAS ROBINSON, DEPUTY CHIEF ENGINEER DATE

TRACKWORK STANDARD DRAWING
CONCRETE TRACKBED CLEARANCE ENVELOPE
GROUT PAD CONSTRUCTION
.

CONTRACT NO.	SCALE	DRAWING NO.	SHEET NO.
FQ-	NOT TO SCALE	ST-TW-001	1 of .

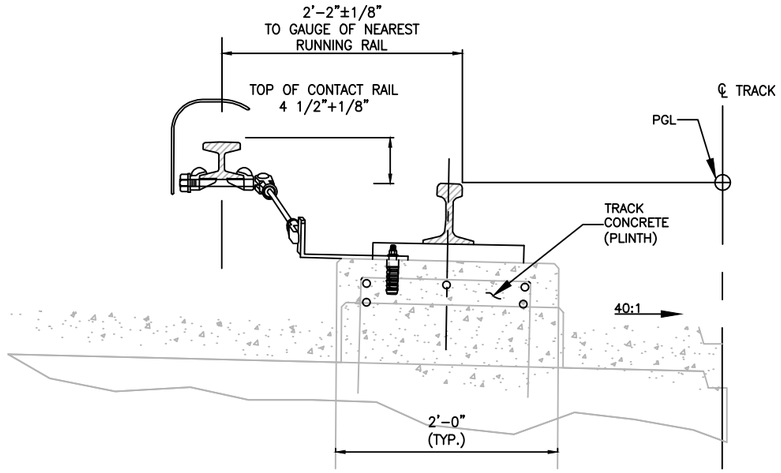

CONTACT RAIL ANCHOR ASSEMBLY SECTION

NTS

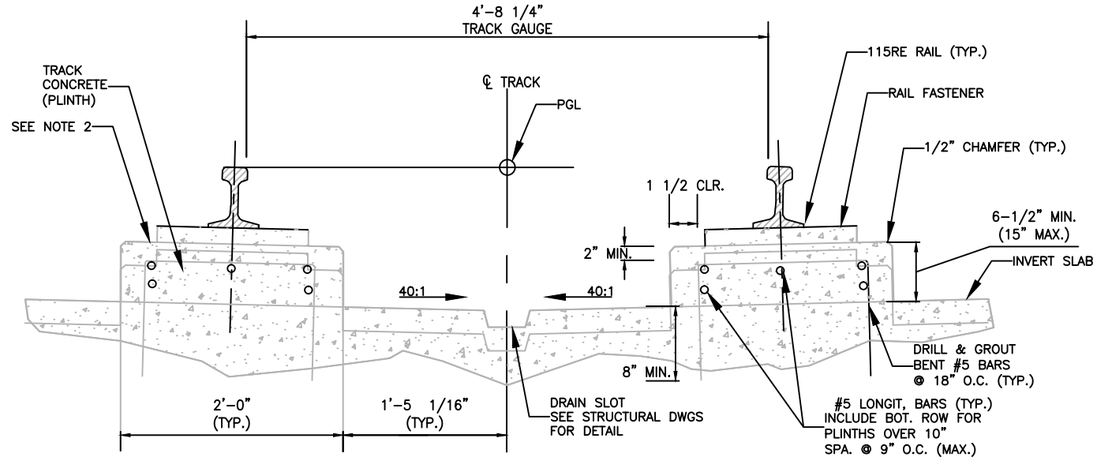

TANGENT TRACK TYPICAL SECTION

NTS

NOTES:

1. VARIATIONS IN THE INVERT OR DECK PROFILE SHALL BE COMPENSATED FOR IN THE TRACK CONCRETE.
2. TOP OF TRACK CONCRETE SHALL BE 40:1 RELATIVE TO TOP OF RAIL PLANE.
3. PROFILE GRADE LINE TO TOP OF INVERT DIMENSION BASED ON 6-5/8" RAIL AND 1-1/2" THICK RAIL FASTENER.
4. PROVIDE 2" MINIMUM COVER ON ALL REINFORCING STEEL, EXCEPT WHERE OTHERWISE SHOWN.
5. ALL REINFORCING STEEL FOR TRACK CONCRETE SHALL BE EPOXY COATED GRADE 60.
6. TRACK SUPERELEVATION SHALL BE ACHIEVED BY VARYING DEPTH OF PLINTH.
7. REINFORCING STEEL FOR TRACK CONCRETE PLINTH IN CONTACT RAIL AND CONTACT RAIL ANCHOR SUPPORT SHALL BE AS INDICATED ON SURFACE TRACK CONCRETE.
8. SPECIAL TRACKWORK PLINTH REINFORCEMENT SHALL BE AS SHOWN HERE. SPECIAL TRACKWORK PLINTH LAYOUT SHALL BE IN ACCORDANCE WITH SPECIAL TRACKWORK DETAILS.
9. DRILL AND GROUT #5 BARS IN ACCORDANCE WITH SPECIFIED MATERIAL MANUFACTURER'S RECOMMENDATIONS.
10. FIELD LAYOUT OF PLINTHS SHALL MAINTAIN ACCESS TO CORROSION PROTECTION BOXES.

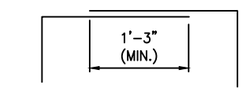

TYPICAL STIRRUP OVERLAP

NTS

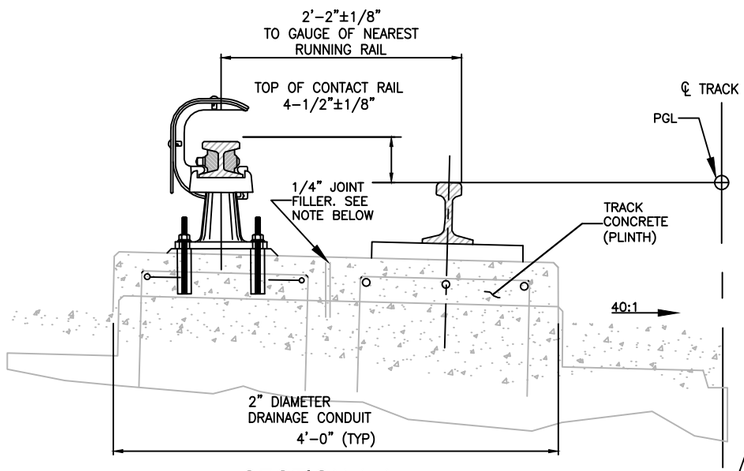

SECTION A-A

NTS

NOTE:

ALTERNATIVE WITH 1/4" JOINT SHOWN. OPTIONAL 4" GAP MAY BE SUBSTITUTED AND REINFORCEMENT ADJUSTED ACCORDINGLY, THUS THE 2" DIAMETER DRAINAGE CONDUIT WILL NOT BE NEEDED.

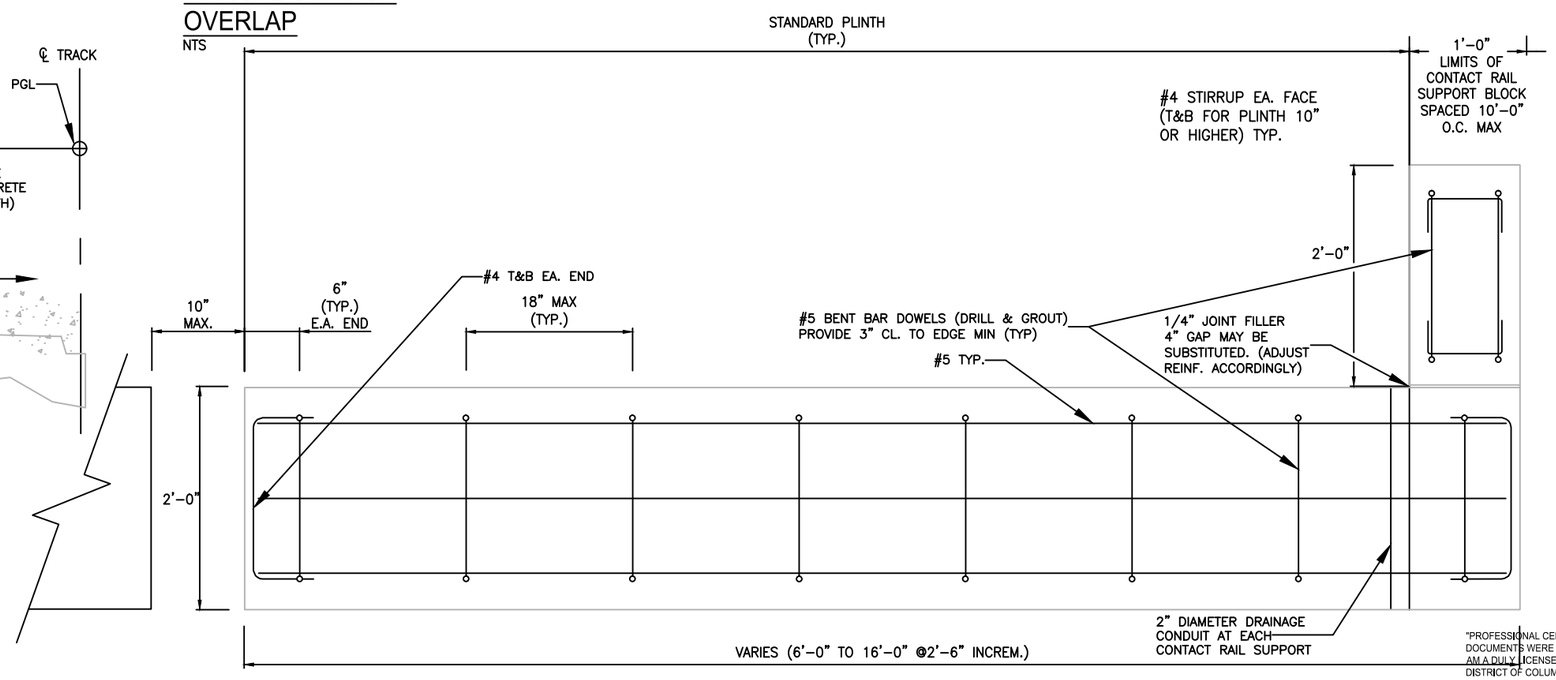

TYPICAL PLINTH PLAN

NTS

"PROFESSIONAL CERTIFICATION: I HEREBY CERTIFY THAT THESE DOCUMENTS WERE PREPARED OR APPROVED BY ME, AND THAT I AM A DULY LICENSED ARCHITECT UNDER THE LAWS OF THE DISTRICT OF COLUMBIA."

LICENSE No. .

EXPIRATION DATE: .

- DC REGISTER SECTION 3413

DESIGNED	DCCO	1/99 DATE
DRAWN	A. DAVIS	5/06 DATE
CHECKED	RAVI AMIN	12/14 DATE

REFERENCE DRAWINGS

NUMBER	TITLE

REVISIONS

DATE	NUM	DESCRIPTION
08/01	01	Revised and Issued by the Authority
09/06	02	Intial DD Submittal
12/14	03	Revised Title Block and changed DD to read ST

WASHINGTON METROPOLITAN AREA TRANSIT AUTHORITY

DEPARTMENT OF TRANSIT INFRASTRUCTURE AND ENGINEERING SERVICES
CENI - TRACK STRUCTURES & FACILITIES

REVISION SUBMITTED _____ DATE

APPROVED _____ DATE
THOMAS ROBINSON
DEPUTY CHIEF ENGINEER

TRACKWORK STANDARD DRAWINGS
CONCRETE TRACKBED CLEARANCE ENVELOPE
GROUT PAD CONSTRUCTION
.

CONTRACT NO.	SCALE	DRAWING NO.	SHEET NO.
FQ-	NOT TO SCALE	ST-TW-002	## of .

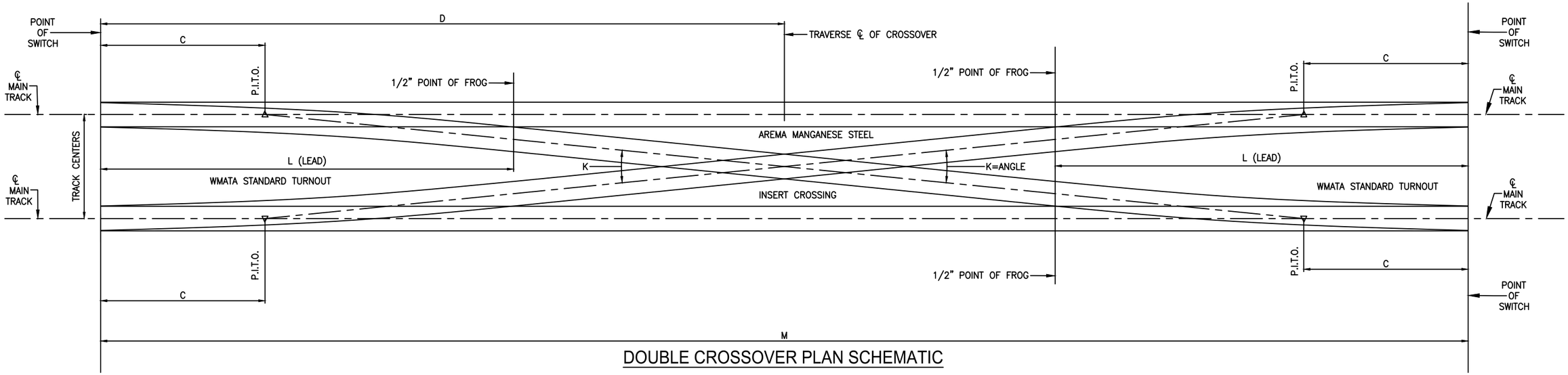

DOUBLE CROSSOVER PLAN SCHEMATIC

DATA TABLE									
ITEM NO.	TRACK CTRS.	TURNOUT NO.	TURNOUT ALIGNMENT	MANGANESE STEEL INSERT CROSSING	C	D	K	M	L
	14.00'	8			30.00'	84.78'	14°–18'–20"	171.56'	68.00'
	14.00'	10			31.42'	101.25'	11°–26'–58"	202.48'	78.92'
	16.50'	8			30.00'	95.74'	14°–18'–20"	191.48'	68.00'
	16.50'	10			31.42'	113.715'	11°–26'–58"	227.43'	78.92'

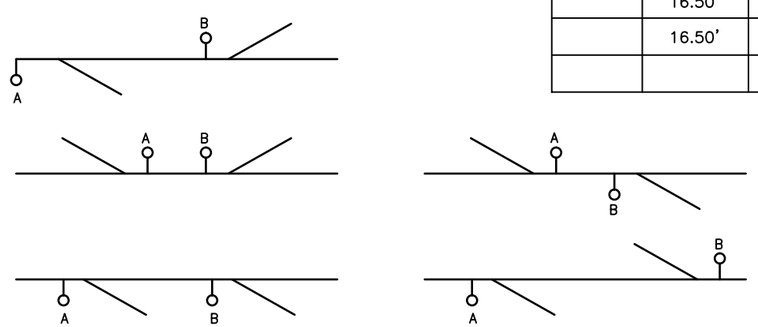

DETAIL A
POSSIBLE SPECIAL TRACKWORK COMBINATIONS (SEE NOTE 5)

NOTES:

1. ALL DIMENSIONS EXCEPT "D" AND "K" SHALL APPLY TO SINGLE CROSSOVERS.
2. WHERE SINGLE CROSSOVERS ARE USED, THE DISTANCE BETWEEN POINTS OF SWITCH OF THE POINT TO POINT TURNOUTS SHALL CONFORM TO THE MANUAL OF DESIGN CRITERIA.
3. ALL SWITCHES SHALL BE PROVIDED WITH AREMA SWITCH POINT DETAIL 5100 (LATEST AREMA PLAN NO. 221.)
4. ALL SINGLE CROSSOVER CONNECTING TRACKS WITH CENTERS EQUAL TO OR GREATER THAN 16'–6" BUT LESS THATN 28'–6" SHALL BE DESIGNED AS TWO TURNOUTS WITH A TANGENT TRACK CONNECTION BETWEEN THE TURNOUT UNITS. FOR ALL SINGLE CROSSOVERS CONNECTING TRACKS WITH CENTERS EQUAL TO OR GREATER THAN 28'–6", USE DRAWING NO. ST–TW–004, MAINTAINING A MINIMUM OF 75'–0" OF TANGENT ON THE CROSSOVER TRACK.
5. BETWEEN TURNOUTS, THE LAYOUT AND REQUIRED SEPARATION DISTANCE ARE GIVEN IN THE "MANUAL OF DESIGN CRITERIA". ALL PROPOSED INSTALLATIONS MUST BE APPROVED BY THE AUTHORITY. REFERENCE DETAIL A FOR OTHER ARRANGED LAYOUTS.
6. FOR NORMAL, MAXIMUM AND CRITICAL OPERATING SPEEDS THROUGH TURNOUTS, REFER TO THE MANUAL OF DESIGN CRITERIA.
7. INVERT OF CONCRETE TRACKBED MUST BE CONSTRUCTED WITH NO CROSS–LEVEL, I.E. WITHOUT A MIDPOINT DRAINAGE "HUMP".
8. TYPICAL DRAINAGE DETAILS SHOWN ON DRAWING DD–M–026.
9. FOR SWITCH ROD THROUGH DRAINAGE DETAILS SEE DRAWING, DD–S–069 AND DD–S–070.

"PROFESSIONAL CERTIFICATION: I HEREBY CERTIFY THAT THESE DOCUMENTS WERE PREPARED OR APPROVED BY ME, AND THAT I AM A DULY LICENSED ARCHITECT UNDER THE LAWS OF THE DISTRICT OF COLUMBIA."

LICENSE No. _____

EXPIRATION DATE: _____

- DC REGISTER SECTION 3413

DESIGNED .DCCO .01/99 DATE
DRAWN .A. DAVIS .05/06 DATE
CHECKED RAVI AMIN 12/14 DATE

REFERENCE DRAWINGS	
NUMBER	TITLE

REVISIONS		
DATE	NUM	DESCRIPTION
08/01	01	Revised & Issued by the Authority
05/06	02	Update Turnout Notes
12/14	03	Revised Title Block & Changed DD to Read ST

WASHINGTON METROPOLITAN AREA TRANSIT AUTHORITY

DEPARTMENT OF TRANSIT INFRASTRUCTURE AND ENGINEERING SERVICES
CENI - TRACK STRUCTURES & FACILITIES

REVISION SUBMITTED _____ DATE

APPROVED _____ DATE
THOMAS ROBINSON
DEPUTY CHIEF ENGINEER

TRACKWORK STANDARD DRAWING
STANDARD DOUBLE CROSSOVER
TANGENT TRACK BETWEEN TYRNOUT AND CROSSING

CONTRACT NO.	SCALE	DRAWING NO.	SHEET NO.
FQ-	NOT TO SCALE	ST-TW-003	3 of .

WMATA CONFIDENTIAL INFORMATION – DO NOT DISCLOSE WITHOUT EXPRESS WRITTEN APPROVAL OF THE GENERAL MANAGER OF THE AUTHORITY

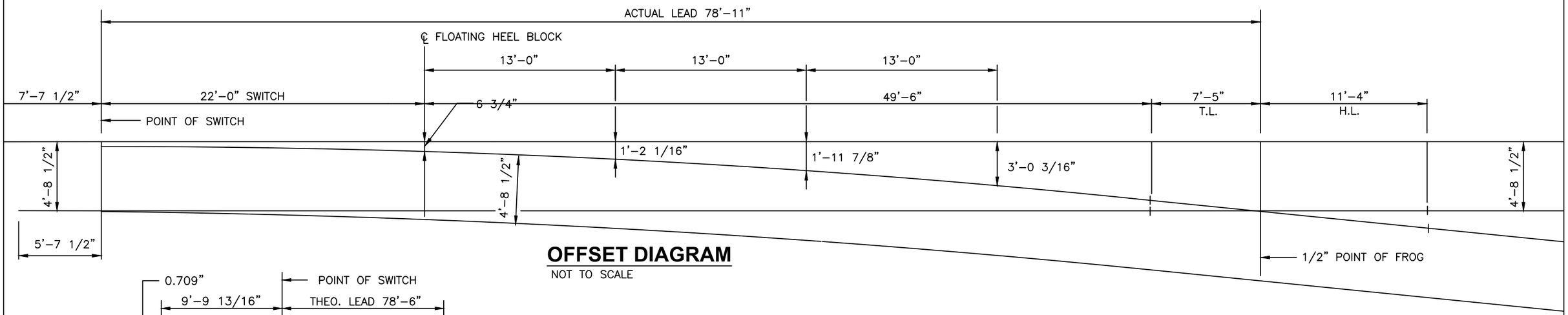

OFFSET DIAGRAM

NOT TO SCALE

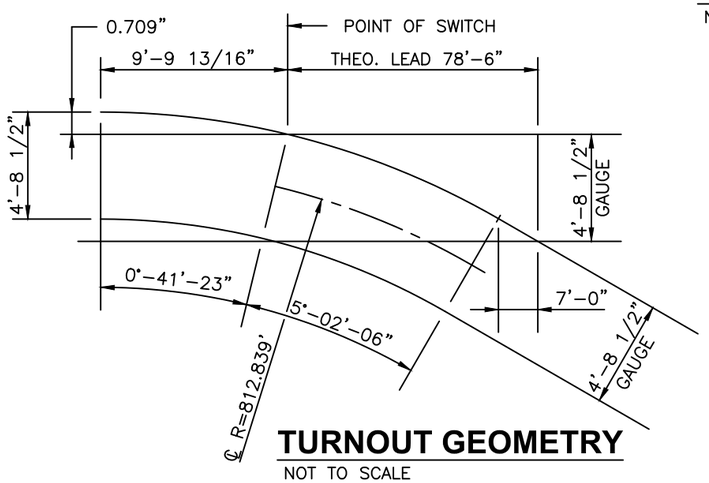

TURNOUT GEOMETRY

NOT TO SCALE

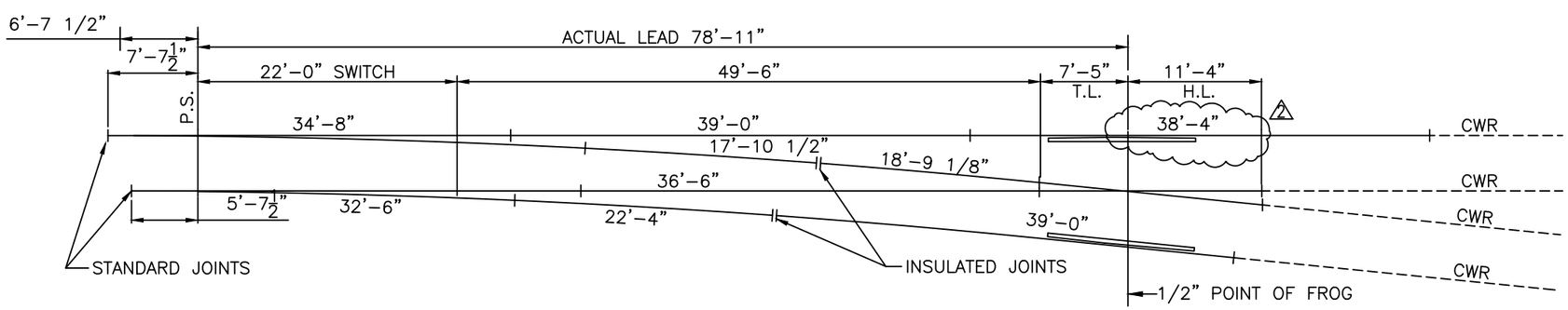

RAIL LAYOUT DIAGRAM

NOT TO SCALE

"PROFESSIONAL CERTIFICATION: I HEREBY CERTIFY THAT THESE DOCUMENTS WERE PREPARED OR APPROVED BY ME, AND THAT I AM A DULY LICENSED ARCHITECT UNDER THE LAWS OF THE DISTRICT OF COLUMBIA."

LICENSE No. _____

EXPIRATION DATE: _____

- DC REGISTER SECTION 3413

DESIGNED	R. REYES	04/06 DATE
DRAWN	C. RIGGINS	04/06 DATE
CHECKED	RAVI AMIN	01/15 DATE

REFERENCE DRAWINGS

NUMBER	TITLE

REVISIONS

DATE	NUM	DESCRIPTION
06/13	01	Revision for Lead Rail at Standard Joint
01/15	02	Revised Title Block and Changed DD to read ST

WASHINGTON METROPOLITAN AREA TRANSIT AUTHORITY

DEPARTMENT OF TRANSIT INFRASTRUCTURE AND ENGINEERING SERVICES
CENI - TRACK STRUCTURES & FACILITIES

REVISION SUBMITTED _____ DATE

APPROVED _____ DATE
THOMAS ROBINSON
DEPUTY CHIEF ENGINEER

TRACKWORK STANDARD DRAWING
NO. 10 PLATED TURNOUT, OFFSET, GEOMETRY,
AND RAIL LAYOUT DIAGRAMS
DIRECT FIXATION TRACK

CONTRACT NO.	SCALE	DRAWING NO.	SHEET NO.
FQ-	NOT TO SCALE	ST-TW-048	## of .

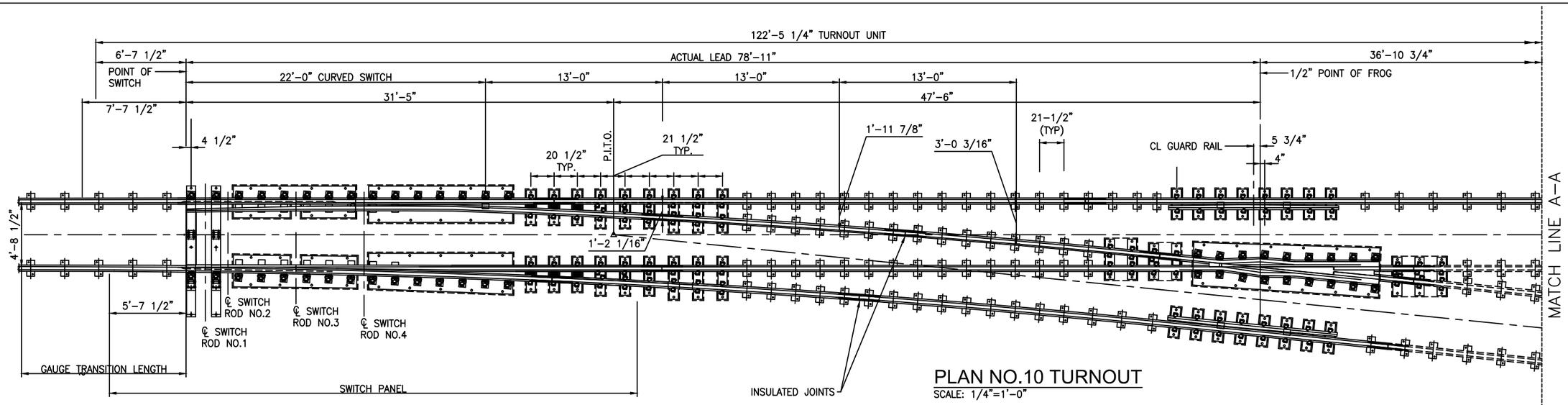

PLAN NO.10 TURNOUT

SCALE: 1/4"=1'-0"

TURNOUT DATA			
FROG	NUMBER		10
	ANGLE		5°-43'-29"
	TOE LENGTH		7'-5"
	HEEL LENGTH		11'-4"
	TOTAL LENGTH		18'-9"
	TOE SPREAD		8 3/8"
	HEEL SPREAD		14 1/8"
SWITCH	LENGTH OF SWITCH		22'-0"
	HEEL SPREAD		6 3/4"
	HEEL ANGLE		2°-14'-12"
	CURVED POINT	THICKNESS AT POINT	0"
		ANGLE AT POINT	0°-41'-23"
		RADIUS	815.19'
		VERTEX DISTANCE	23/32"
	STRAIGHT POINT	THICKNESS AT POINT	0"
		ANGLE AT POINT	0°-41'-23"
		RADIUS	810.48'
		VERTEX DISTANCE	11/16"
ACTUAL LEAD			78'-11"
STRAIGHT CLOSURE RAIL LENGTH			36'-6"
CURVED CLOSURE RAIL LENGTH			36'-7 5/8"
TURNOUT CURVE	CENTER LINE RADIUS		812.84'
	DEGREE OF CURVE		7°-02'-56"
	CENTRAL ANGLE		3°-29'-17"
TANGENT ADJACENT TOE OF FROG			0

BILL OF MATERIAL	
QTY.	DESCRIPTION – FURNISHED THIS CONTRACT
1	NO. 10 PLATED SWITCH-DIRECT FIXATION TRACK, COMPLETE
1	NO. 10 PLATED FROG-DIRECT FIXATION TRACK, COMPLETE
2	12'-6" TEE RAIL DESIGN GUARD RAIL COMPLETE.
A.R.	STRAIGHT CLOSURE RAIL, STOCK RAIL AND TURNOUT RAIL
A.R.	CURVED CLOSURE RAIL, STOCK RAIL AND TURNOUT RAIL
A.R.	BONDED STANDARD RAIL JOINTS, COMPLETE
A.R.	BONDED INSULATED RAIL JOINTS, COMPLETE
A.R.	LEFT HAND PANDROL CLIPS e2056
A.R.	ELASTOMER PADS FOR EACH PLATE
A.R.	DIRECT FIXATION FASTENERS
A.R.	GROUT PADS

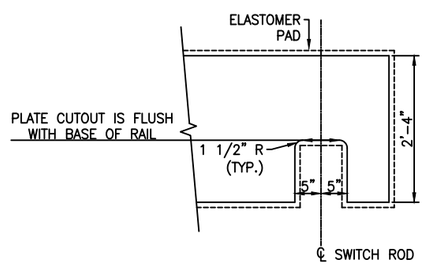

DETAIL - CUTOUT FOR PLATE

NOT TO SCALE

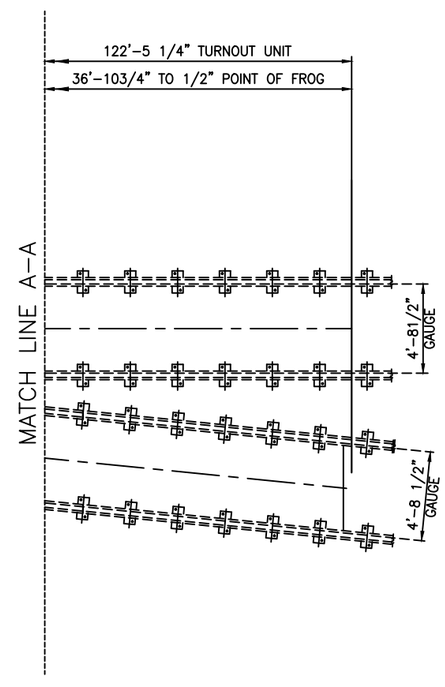

NOTES:

1. GAUGE WIDTH THROUGHOUT TURNOUT IS 4' 8 ½".
2. TURNOUT UNITS SHALL BE FULLY ASSEMBLED IN THE FACTORY FOR INSPECTION MAKE-UP RAIL SHALL BE USED DURING FACTORY ASSEMBLY TO ASSURE LOCATION AND ALIGNMENT OF PLATES USED TO FASTEN CWR.
3. ALL RAIL AND COMPONENTS SHALL CONFORM TO 115 RE RAIL SECTION.
4. RAIL SHALL BE HEAD HARDENED.
5. CLOSURE RAIL LENGTHS INDICATED ARE TOTAL LENGTHS AND DO NOT ALLOW FOR STANDARD OR INSULATED JOINTS.
6. RAIL JOINTS SHOWN IN RAIL LAYOUT DIAGRAM INTERNAL TO THE TURNOUT ARE REQUIRED. ALL OTHER JOINTS REQUIRED FOR PANELIZING THE SWITCH OR TO AID IN TRANSPORTING COMPONENTS SHALL BE LOCATED BY THE CONTRACTOR AND SUBMITTED TO THE ENGINEER FOR APPROVAL JOINT IN OPPOSITE RAILS SHALL HAVE A TWO PLATE STAGGER.
7. RAIL ENDS TO BE JOINTED TO CWR ARE UNDRILLED.
8. DO NOT DRILL FOR JOINTS ON STOCK RAILS AHEAD OF P.S.
9. RIGHT HAND TURNOUT IS SHOWN. LEFT HAND TURNOUT IS OPPOSITE HAND.
10. ALL RAILS WITHIN TURNOUT UNITS ARE CLAMPED TO THE PLATES BY LEFT HAND PANDROL SPRING CLIPS – E2056
11. RAIL AT JOINT BARS ARE FASTENED WITH LEFT HAND MODIFIED 'E' CLIPS TYPE 'J' OR 'C' CLIPS
12. DIMENSIONS SHOWN ON STOCK RAILS AHEAD OF POINT OF SWITCH ARE STANDARD. THE AUTHORITY WILL SPECIFY STOCK RAIL LENGTHS AHEAD OF POINT OF SWITCH WHERE OTHER THAN STANDARD LENGTHS ARE REQUIRED.
13. LOCATE SEPARATOR BLOCKS NOT MORE THAN 4'-0" ON CENTERS AND AS NECESSARY TO CLEAR JOINT BARS AND ANCHOR BOLTS.
14. GUARD RAILS ARE 132 RE RAIL SECTION HEAD HARDENED.
15. WIDTH AND LENGTH OF ELASTOMER PADS SHALL BE 2" LARGER THAN DIMENSIONS OF CORRESPONDING PLATES.

"PROFESSIONAL CERTIFICATION: I HEREBY CERTIFY THAT THESE DOCUMENTS WERE PREPARED OR APPROVED BY ME, AND THAT I AM A DULY LICENSED ARCHITECT UNDER THE LAWS OF THE DISTRICT OF COLUMBIA."

LICENSE No. _____

EXPIRATION DATE: _____

- DC REGISTER SECTION 3413

DESIGNED _____ DATE

DRAWN _____ DATE

CHECKED Ravi Amin 12/15 DATE

REFERENCE DRAWINGS	
NUMBER	TITLE

REVISIONS		
DATE	NUM	DESCRIPTION
09/07	01	Revised Gauge Plates
01/15	02	Revised Title Block & Change DD to read ST

WASHINGTON METROPOLITAN AREA TRANSIT AUTHORITY

DEPARTMENT OF TRANSIT INFRASTRUCTURE AND ENGINEERING SERVICES

CENI - TRACK STRUCTURES & FACILITIES

REVISION SUBMITTED _____ DATE

APPROVED THOMAS ROBINSON, DEPUTY CHIEF ENGINEER DATE

TRACKWORK STANDARD DRAWING
NO. 10 PLATED TURNOUT, PLAN, DIRECT FIXATION TRACK

CONTRACT NO.	SCALE	DRAWING NO.	SHEET NO.
FQ-	AS SHOWN	ST-TW-049	## of .

WMATA CONFIDENTIAL INFORMATION – DO NOT DISCLOSE WITHOUT EXPRESS WRITTEN APPROVAL OF THE GENERAL MANAGER OF THE AUTHORITY

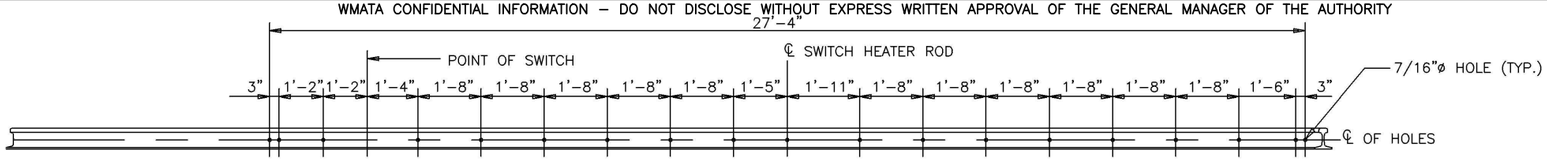

STOCK RAIL DRILLING FOR SWITCH HEATER ROD BRACKETS

SCALE: 1/2"=1'–0"

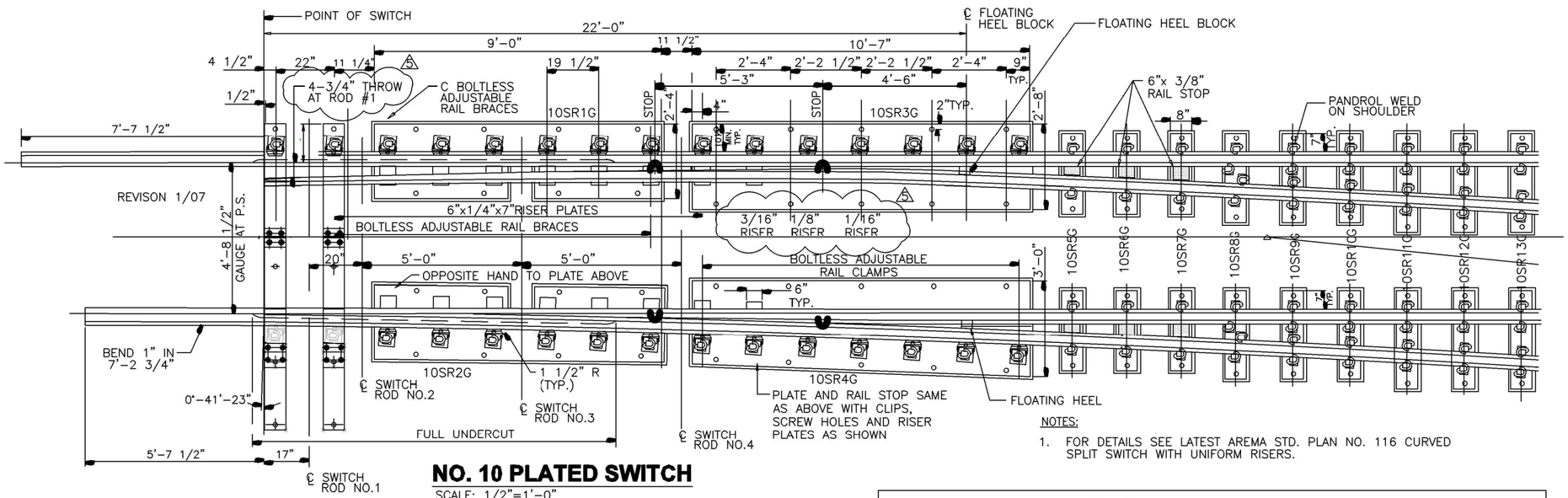

NOTES:

1. FOR DETAILS SEE LATEST AREMA STD. PLAN NO. 116 CURVED SPLIT SWITCH WITH UNIFORM RISERS.

NO. 10 PLATED SWITCH

SCALE: 1/2"=1'–0"

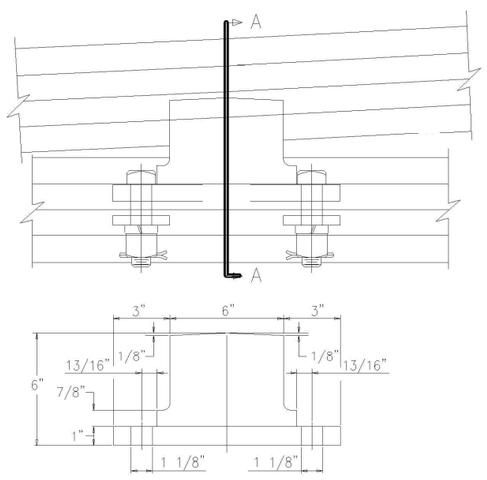

FLOATING HEEL BLOCK

SCALE: QUARTER SIZE

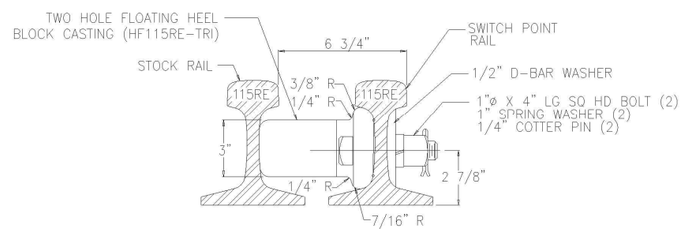

SECTION A–A

SCALE: QUARTER SIZE

22'–0" STRAIGHT SWITCH, COMPLETE	
BILL OF MATERIALS	
QTY.	DESCRIPTION – FURNISHED THIS CONTRACT
1 EA.	22'–0" SWITCH ON 35'–0" RAIL WITH FLOATING HEEL BLOCK (LEFT HAND CURVED AND RIGHT HAND STRAIGHT) COMPLETE WITH THICK WEB OR WITH REINFORCING BARS AND RAIL STOPS ATTACHED (POINT DETAIL 5100 PER LATEST AREMA STD. PLAN NO. 221) AND AS MODIFIED AS SHOWN
1	34'–8" STRAIGHT UNDERCUT STOCK RAIL
1	32'–6" BENT UNDERCUT STOCK RAIL
4	INSULATED VERTICAL SWITCH RODS (RACOR TYPE SMJ)
2	FLOATING HEEL BLOCK ASSEMBLY, COMPLETE
1	INSULATED GAUGE PLATE 10G1G COMPLETE WITH BOLTLESS ADJUSTABLE RAIL BRACES
1 EA.	10SR1G AND 10SR2G SPECIAL SWITCH PLATES COMPLETE WITH BOLTLESS ADJUSTABLE RAIL BRACES AND GRADUATED RISER PLATES
1 EA.	10SR3G AND 10SR4G SPECIAL SWITCH PLATES COMPLETE WITH BOLTLESS ADJUSTABLE RAIL CLAMPS
2 EA.	10SR5G THRU 10SR13G SPECIAL SWITCH PLATES COMPLETE WITH PANDROL WELD–ON SHOULDERS AND e2056 LEFT HAND SPRING CLIPS
A.R.	ELASTOMER PADS FOR EVERY PLATE
A.R.	10SR1G THRU 10SR15 AND SR15LG PLATES

PLATE DETAILS		
PLATE	LENGTH	WIDTH
✳ 10SR5LG	2'–7"	8"
✳ 10SR6LG	2'–7"	8"
✳ 10SR7LG	2'–7"	8"
10SR8LG	2'–10"	8"
10SR9LG	2'–10"	8"
10SR10LG	2'–10"	8"
10SR11LG	3'–1"	8"
10SR12LG	3'–1"	8"
10SR13LG	3'–1"	8"
✳ 10SR5RG	2'–7"	8"
✳ 10SR6RG	2'–7"	8"
✳ 10SR7RG	2'–7"	8"
10SR8RG	2'–10"	8"
10SR9RG	2'–10"	8"
10SR10RG	2'–10"	8"
10SR11RG	3'–1"	8"
10SR12RG	3'–1"	8"
10SR13RG	3'–1"	8"

✳ RAIL STOPS IN LIEU OF CENTER WELD–ON SHOULDERS

"PROFESSIONAL CERTIFICATION: I HEREBY CERTIFY THAT THESE DOCUMENTS WERE PREPARED OR APPROVED BY ME, AND THAT I AM A DULY LICENSED ARCHITECT UNDER THE LAWS OF THE DISTRICT OF COLUMBIA."

LICENSE No. .

EXPIRATION DATE: .

- DC REGISTER SECTION 3413

DESIGNED . DATE .

DRAWN . DATE .

CHECKED RAVI AMIN DATE 01/15

REFERENCE DRAWINGS

NUMBER	TITLE

REVISIONS

DATE	NUM	DESCRIPTION
07/06	01	Edit to Notes and Revise Stock Rail Drillings
08/06	02	Stock Rail Drilling Hole from 7/8" to 7/16"
01/07	03	Revised Plate 10G1G Holes to Reflect DF
09/07	04	Revised Gauge Plate
06/13	05	Revised Riser Plates
06/13	06	Revised Throw at Rod
01/15	07	Revised Title Block and Changed DD to read ST

WASHINGTON METROPOLITAN AREA TRANSIT AUTHORITY

DEPARTMENT OF TRANSIT INFRASTRUCTURE AND ENGINEERING SERVICES
CENI - TRACK STRUCTURES & FACILITIES

REVISION SUBMITTED DATE

APPROVED THOMAS ROBINSON DATE
DEPUTY CHIEF ENGINEER

TRACKWORK STANDARD DRAWING
NO. 10 TURNOUT, PLATED SWITCH,
DIRECT FIXATION TRACK
.

CONTRACT NO.	SCALE	DRAWING NO.	SHEET NO.
FQ-	AS SHOWN	ST-TW-050	## of .

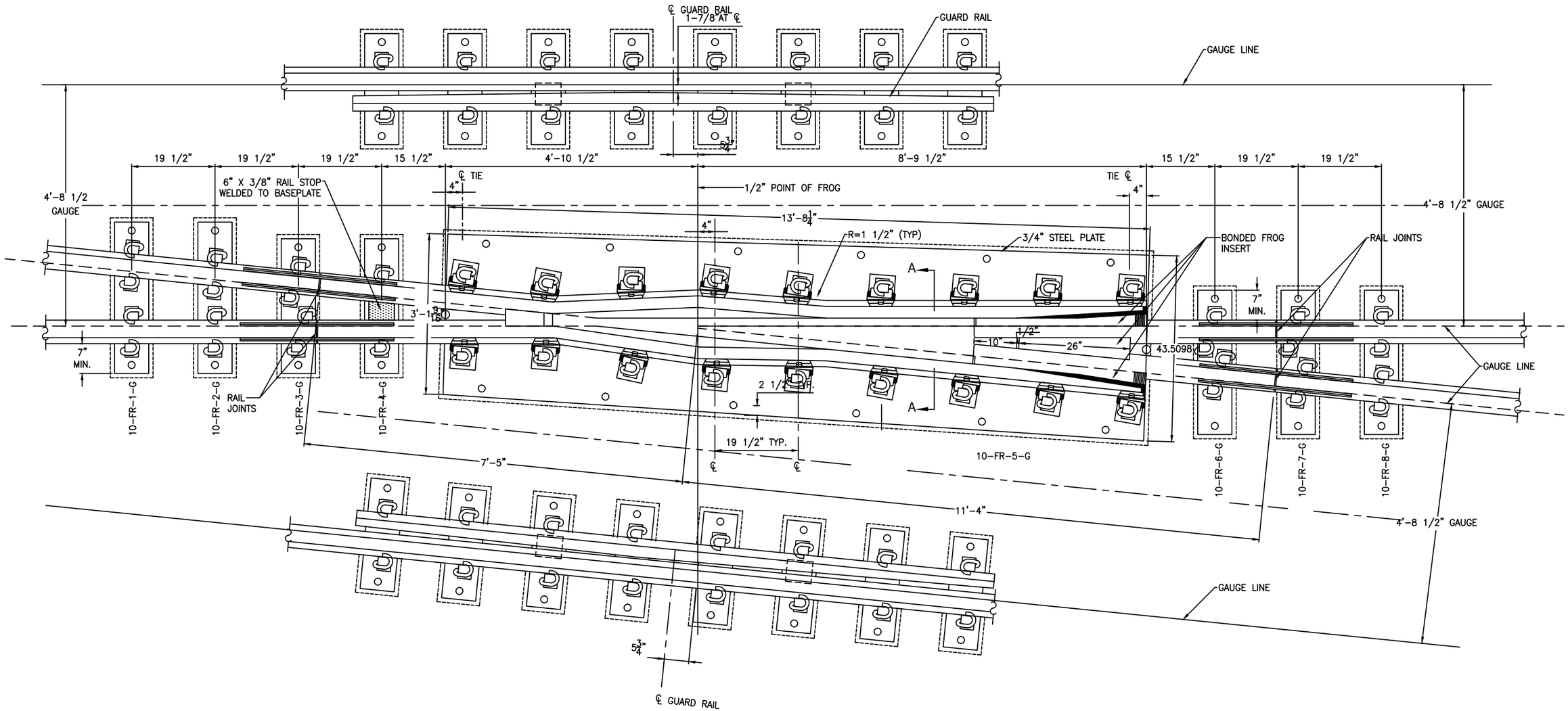

PLATE DETAILS		
PLATE	LENGTH	WIDTH
10-FR-1-G	3'-0"	8"
10-FR-2-G	3'-0"	8"
10-FR-3-G	2'-8"	8"
10-FR-4-G	2'-8"	8"
10-FR-6-G	2'-10"	8"
10-FR-7-G	2'-10"	8"
10-FR-8-G	2'-10"	8"

NO.10 PLATED FROG-G, COMPLETE	
BILL OF MATERIAL	
QTY	DESCRIPTION – FURNISHED THIS CONTRACT
1	NO. 10 RAILBOUND MAGANESE STEEL FROG, COMPLETE (PER LATEST AREMA STD. PLAN NO. 623) AND MODIFIED AS SHOWN
1 EA	SPECIAL FROG PLATES 10-FR-1-G THRU 10-FR-8-G, COMPLETE
2	BONDED FROG INSERTS
18	BOLTLESS ADJUSTABLE RAIL BRACE FOR LEFT HAND PANDROL CLIP e2056
A.R.	BONDED FROG INSERTS

NOTES:
1. SEE DRAWING NUMBER ST-TW-052 FOR FROG AND GUARD RAIL DETAILS.
2. RAIL STOPS TO BE 3/8" SHOP FILLET WELD.

"PROFESSIONAL CERTIFICATION: I HEREBY CERTIFY THAT THESE DOCUMENTS WERE PREPARED OR APPROVED BY ME, AND THAT I AM A DULY LICENSED ARCHITECT UNDER THE LAWS OF THE DISTRICT OF COLUMBIA."

LICENSE No. _____.

EXPIRATION DATE: _____.

- DC REGISTER SECTION 3413

DESIGNED	R. REYES	04/06 DATE
DRAWN	A. DAVIS	09/2006 DATE
CHECKED	Ravi Amin	01/15 DATE

REFERENCE DRAWINGS

NUMBER	TITLE

REVISIONS

DATE	NUM	DESCRIPTION
09/06	01	Added Note No. 2
01/15	02	Revised Title Block & Changed DD to read ST

WASHINGTON METROPOLITAN AREA TRANSIT AUTHORITY

DEPARTMENT OF TRANSIT INFRASTRUCTURE AND ENGINEERING SERVICES
CENI - TRACK STRUCTURES & FACILITIES

REVISION SUBMITTED _____ DATE

APPROVED _____ DATE
THOMMAS ROBINSON
DEPUTY CHIEF ENGINEER

TRACKWORK STANDARD DRAWING
NO. 10 TURNOUT, PLATED FROG,
DIRECT FIXATION TRACK
.

CONTRACT NO.	SCALE	DRAWING NO.	SHEET NO.
FQ-	1"=1'-0"	ST-TW-051	## of .

WMATA CONFIDENTIAL INFORMATION – DO NOT DISCLOSE WITHOUT EXPRESS WRITTEN APPROVAL OF THE GENERAL MANAGER OF THE AUTHORITY

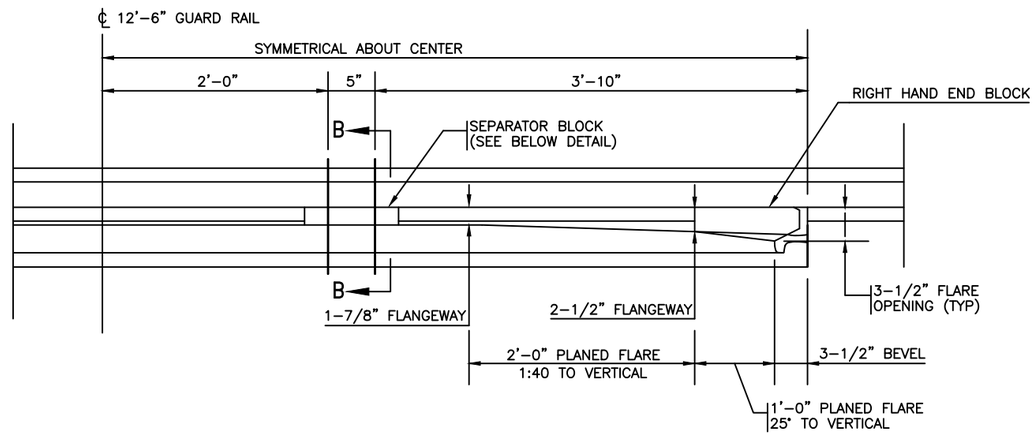

12'-6" GUARDRAIL

SCALE: 1 1/2"=1'–0"

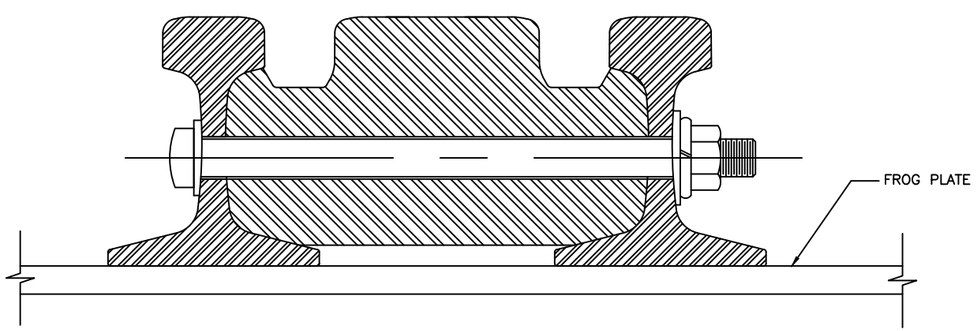

PLATE DETAIL; SECTION A-A

NOT TO SCALE

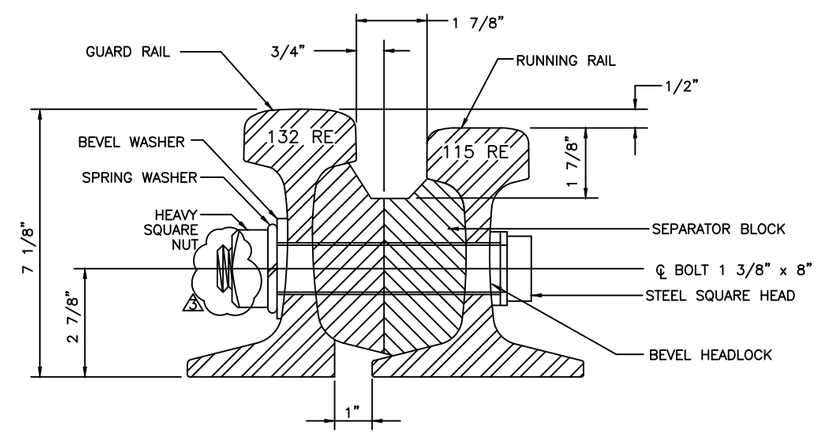

SECTION B-B - SEPARATOR BLOCK

SCALE: HALF SIZE

"PROFESSIONAL CERTIFICATION: I HEREBY CERTIFY THAT THESE DOCUMENTS WERE PREPARED OR APPROVED BY ME, AND THAT I AM A DULY LICENSED ARCHITECT UNDER THE LAWS OF THE DISTRICT OF COLUMBIA."

LICENSE No. .

EXPIRATION DATE: .

- DC REGISTER SECTION 3413

DESIGNED	R. REYES	04/06 DATE
DRAWN	A. DAVIS	04/06 DATE
CHECKED	RAVI AMIN	01/15 DATE

REFERENCE DRAWINGS

NUMBER	TITLE

REVISIONS

DATE	NUM	DESCRIPTION
08/06	01	Revised and Issued by the Authority
12/06	02	Drawing Reissued
06/13	03	Omit Cotter Pin at Separator Block
01/15	04	Revised Title Block and Changed DD to read ST

WASHINGTON METROPOLITAN AREA TRANSIT AUTHORITY

DEPARTMENT OF TRANSIT INFRASTRUCTURE AND ENGINEERING SERVICES
CENI - TRACK STRUCTURES & FACILITIES

REVISION SUBMITTED _____ DATE

APPROVED _____ DATE
THOMAS ROBINSON
DEPUTY CHIEF ENGINEER

TRACKWORK STANDARD DRAWING
NO. 10 PLATED TURNOUT, DETAILS,
DIRECT FIXATION TRACK
.

CONTRACT NO.	SCALE	DRAWING NO.	SHEET NO.
FQ-	1-1/2" = 1'-0"	ST-TW-052	## of .

WMATA CONFIDENTIAL INFORMATION – DO NOT DISCLOSE WITHOUT EXPRESS WRITTEN APPROVAL OF THE GENERAL MANAGER OF THE AUTHORITY

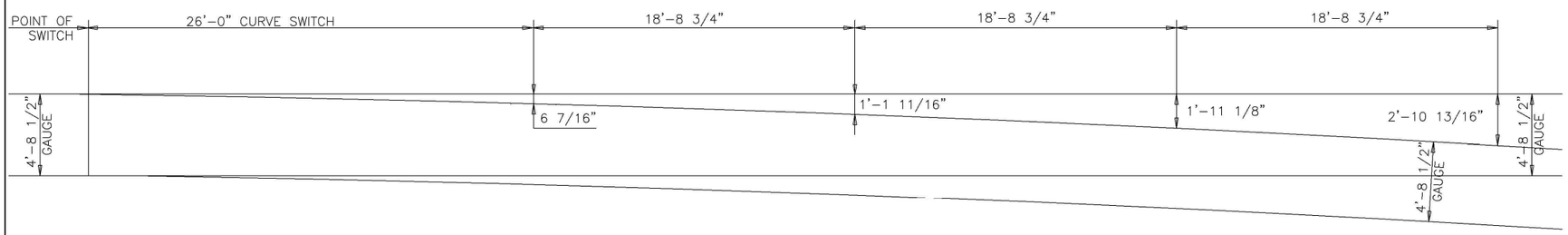

NO. 15 OFFSET DIAGRAM

SCALE: 1/4"=1'–0"

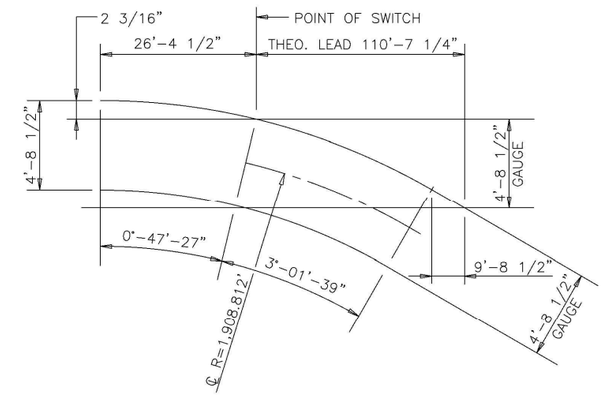

NO. 15 TURNOUT GEOMETRY

NOT TO SCALE

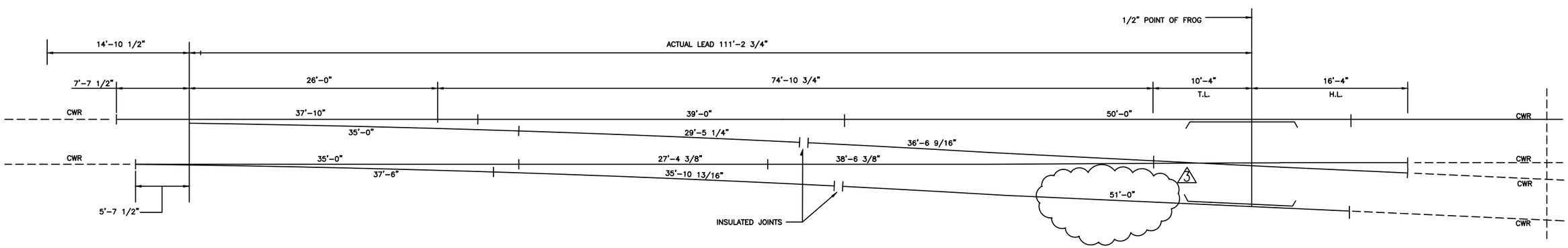

RAIL LAYOUT DIAGRAM

SCALE: 1/8"=1'–0"

"PROFESSIONAL CERTIFICATION: I HEREBY CERTIFY THAT THESE DOCUMENTS WERE PREPARED OR APPROVED BY ME, AND THAT I AM A DULY LICENSED ARCHITECT UNDER THE LAWS OF THE DISTRICT OF COLUMBIA."

LICENSE No. _____.

EXPIRATION DATE: _____.

- DC REGISTER SECTION 3413

DESIGNED	R.REYES	10/05 DATE
DRAWN	A. DAVIS	06/06 DATE
CHECKED	RAVI AMIN	01/15 DATE

REFERENCE DRAWINGS

NUMBER	TITLE

REVISIONS

DATE	NUM	DESCRIPTION
04/05	01	Rev. for DD-DWG Approval, Apr. 2005
06/06	02	Minor Revision
06/13	03	Dimension to Accommodate Unsuspended Rail Joint near Frog
01/15	04	Revised Title Block and Changed DD to read ST

WASHINGTON METROPOLITAN AREA TRANSIT AUTHORITY

DEPARTMENT OF TRANSIT INFRASTRUCTURE AND ENGINEERING SERVICES
CENI - TRACK STRUCTURES & FACILITIES

REVISION SUBMITTED _____ DATE

APPROVED _____ DATE
THOMAS ROBINSON
DEPUTY CHIEF ENGINEER

TRACKWORK STANDARD DRAWING
NO. 15 TURNOUT, OFFSET, GEOMETRY &
RAIL LAYOUT DIAGRAM,
DIRECT FIXATION TRACK

CONTRACT NO.	SCALE	DRAWING NO.	SHEET NO.
FQ-	AS SHOWN	ST-TW-053	## of .

WMATA CONFIDENTIAL INFORMATION – DO NOT DISCLOSE WITHOUT EXPRESS WRITTEN APPROVAL OF THE GENERAL MANAGER OF THE AUTHORITY

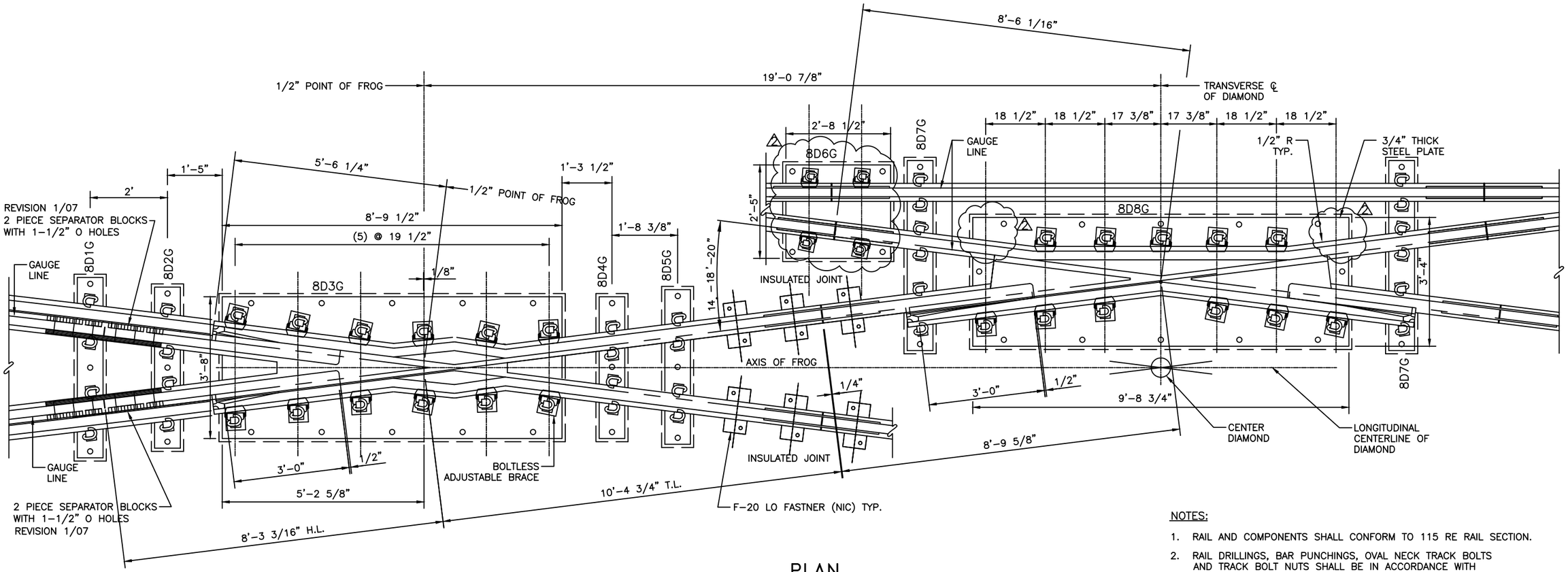

PLAN

NO. 8 DOUBLE CROSSOVER CENTER FROG & END FROG – COMPLETE	
BILL OF MATERIAL	
QUANTITY	DESCRIPTION
2 EACH	MANGANESE STEEL INSERT END FROG WITH LEVEL GUARDS FOR 14°–18'–20" CROSSING ANGLE, COMPLETE (PER LATEST AREMA STANDARD PLAN NO. 774 AND 750) AND MODIFIED AS INDICATED
2 EACH	MANGANESE STEEL INSERT CENTER FROG WITH LEVEL GUARDS FOR 14°–18'–20" CROSSING ANGLE, COMPLETE (PER LATEST AREMA STANDARD PLAN NO. 774 AND 750)
2 EACH	SPECIAL PLATES 8D1 THRU 8D5, COMPLETE
2 PER FROG	BONDED FROG INSERTS
50	BOLTLESS ADJUSTABLE BRACE WITH LEFT HAND PANDROL CLIPS e2056

PLATE DETAILS		
PLATE	LENGTH	WIDTH
8D1G	4'–8"	8"
8D2G	4'–2"	8"
8D4G	3'–8"	8"
8D5G	4'–0"	8"
8D7G	4'–11"	8"

NOTES:

1. RAIL AND COMPONENTS SHALL CONFORM TO 115 RE RAIL SECTION.
2. RAIL DRILLINGS, BAR PUNCHINGS, OVAL NECK TRACK BOLTS AND TRACK BOLT NUTS SHALL BE IN ACCORDANCE WITH AREMA MANUAL OF RAILWAY ENGINEERING, PART 4, RAIL (36"–6 HOLE JOINT BAR, 115 RE RAIL SECTION).
3. CROSSOVER END AND CENTER FROGS SHALL BE FULLY HEAT TREATED RAILBOUND MAGANESE STEEL EXPLOSION HARDENED PER AREMA TRACKWORK SPECS. "SPECIAL TRACKWORK MATERIAL M2.7."
4. ALL SPECIAL FROG PLATES SHALL BE 3/4" THICK WITH NO RAIL CANT.
5. ELASTOMER PADS SHALL BE 3/4" THICK AND EXTEND BEYOND THE FROG PLATES 1" ON ALL SIDES.
6. THE BONDED FROG AND BONDED CENTER FROG INSERTS SHALL BE MILLED CARBON STEEL CASTINGS AS SPECIFIED IN THE CONTRACT SPECIFICATIONS, AND AS SHOWN ON THIS DRAWING.
7. USE 2–PIECE SEPARATOR BLOCKS WITH 1–1/2" ø HOLE

"PROFESSIONAL CERTIFICATION: I HEREBY CERTIFY THAT THESE DOCUMENTS WERE PREPARED OR APPROVED BY ME, AND THAT I AM A DULY LICENSED ARCHITECT UNDER THE LAWS OF THE DISTRICT OF COLUMBIA."

LICENSE No. _____

EXPIRATION DATE: _____

- DC REGISTER SECTION 3413

DESIGNED	R. REYES	04/06 DATE
DRAWN	A. DAVIS	12/06 DATE
CHECKED	RAVI AMIN	01/15 DATE

REFERENCE DRAWINGS

NUMBER	TITLE

REVISIONS

DATE	NUM	DESCRIPTION
07/06	01	Added Information to Plan View
06/13	02	Revised Adjustable Brace Locations
01/15	03	Revised Title Block and Changed DD to read ST

WASHINGTON METROPOLITAN AREA TRANSIT AUTHORITY

DEPARTMENT OF TRANSIT INFRASTRUCTURE AND ENGINEERING SERVICES
CENI - TRACK STRUCTURES & FACILITIES

REVISION SUBMITTED _____ DATE

APPROVED _____ DATE
THOMAS ROBINSON
DEPUTY CHIEF ENGINEER

TRACKWORK STANDARD DRAWING
NO. 8 GUARDED DOUBLE CROSSOVER, 14'-0"
TRACK CENTERS, DIAMOND & END FROG DETAILS,
DIRECT FIXATION TRACK

CONTRACT NO.	SCALE	DRAWING NO.	SHEET NO.
FQ-	3/4" = 1'-0"	ST-TW-067	## of .

WMATA CONFIDENTIAL INFORMATION – DO NOT DISCLOSE WITHOUT EXPRESS WRITTEN APPROVAL OF THE GENERAL MANAGER OF THE AUTHORITY

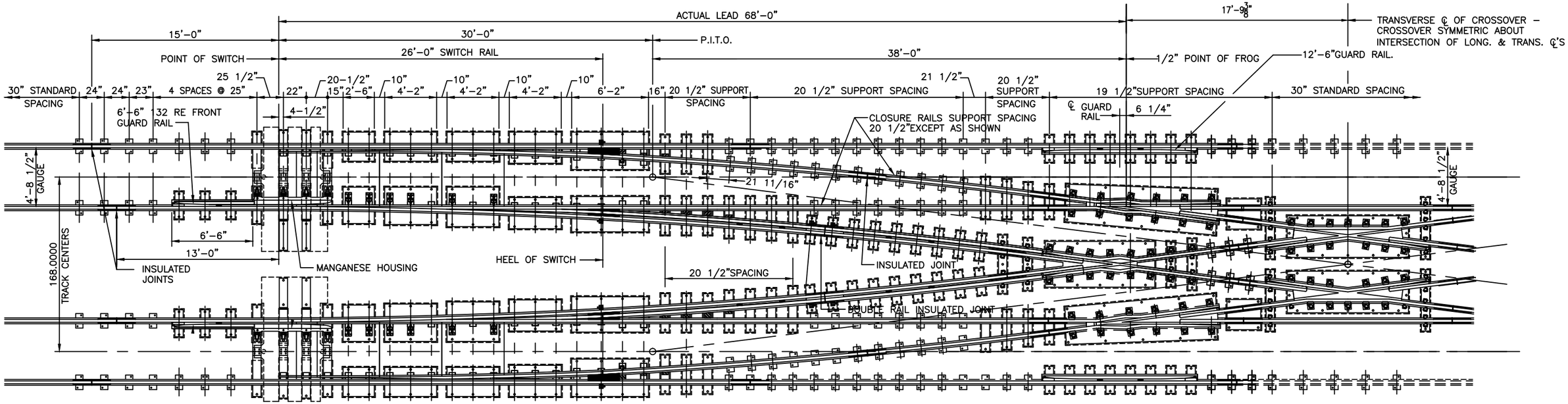

NO. 8 GUARDED DOUBLE CROSSOVER PLAN

SCALE: 1/4"=1'–0"

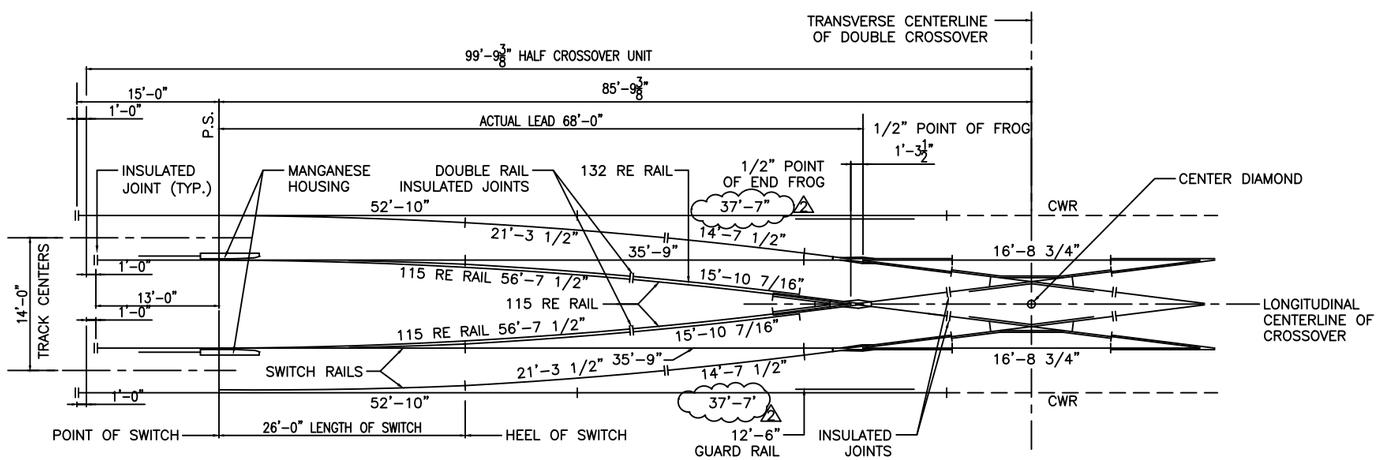

RAIL LAYOUT DIAGRAM

SCALE: 1/8"=1'–0"

BILL OF MATERIAL	
QTY.	DESCRIPTION – FURNISHED THIS CONTRACT
4	NO. 8 GUARDED PLATED SWITCH, DIRECT FIX, COMPL.
4	NO. 8 PLATED FROG, DIRECT FIXATION, COMPLETE
4	12'–6" GUARD RAIL, FULLY HEAT TREATED, COMPLETE
2 EACH	RAILBOUND MAGANESE STEEL, END AND CENTER CROSSING FROGS, DIRECT FIXATION, COMPLETE
4	MANGANESE HOUSING WITH DUCTILE IRON CHAIRS
24	DUCTILE IRON RAIL STOPS
A.R.	132 RE GUARD RAILS
A.R.	RAIL JOINTS, INTERNAL TO THE TURNOUTS
A.R.	LEFT HAND PANDROL CLIPS e2056
A.R.	GR PLATES
A.R.	INSULATED JOINTS
A.R.	ELASTOMER PADS AT EVERY PLATE

BILL OF MATERIAL	
QTY.	DESCRIPTION – FURNISHED BY OTHERS
A.R.	F20LO RAIL DIRECT FIXATION FASTENERS

"PROFESSIONAL CERTIFICATION: I HEREBY CERTIFY THAT THESE DOCUMENTS WERE PREPARED OR APPROVED BY ME, AND THAT I AM A DULY LICENSED ARCHITECT UNDER THE LAWS OF THE DISTRICT OF COLUMBIA."

LICENSE No. _____

EXPIRATION DATE: _____

- DC REGISTER SECTION 3413

DESIGNED	R. REYES	04/06 DATE
DRAWN	A. AMIN	07/07 DATE
CHECKED	RAVI AMIN	01/15 DATE

REFERENCE DRAWINGS

NUMBER	TITLE

REVISIONS

DATE	NUM	DESCRIPTION
07/05	01	Rail Layout Diagran & Notes
06/13	02	Revised Dim. of Lead Rails at Standard Joinnts
01/15	03	Revised Title Block and Changed DD to read ST

WASHINGTON METROPOLITAN AREA TRANSIT AUTHORITY

DEPARTMENT OF TRANSIT INFRASTRUCTURE AND ENGINEERING SERVICES
CENI - TRACK STRUCTURES & FACILITIES

REVISION SUBMITTED _____ DATE

APPROVED _____ DATE
THOMAS ROBINSON
DEPUTY CHIEF ENGINEER

TRACKWORK STANDARD DRAWING
NO. 8 GUARDED DOUBLE CROSSOVER, TYPE 1.
HALF UNIT, 14'-0" TRACK CENTERS, PLAN,
DIRECT FIXATION TRACK

CONTRACT NO.	SCALE	DRAWING NO.	SHEET NO.
FQ-	AS SHOWN	ST-TW-074	## of .

WMATA CONFIDENTIAL INFORMATION – DO NOT DISCLOSE WITHOUT EXPRESS WRITTEN APPROVAL OF THE GENERAL MANAGER OF THE AUTHORITY

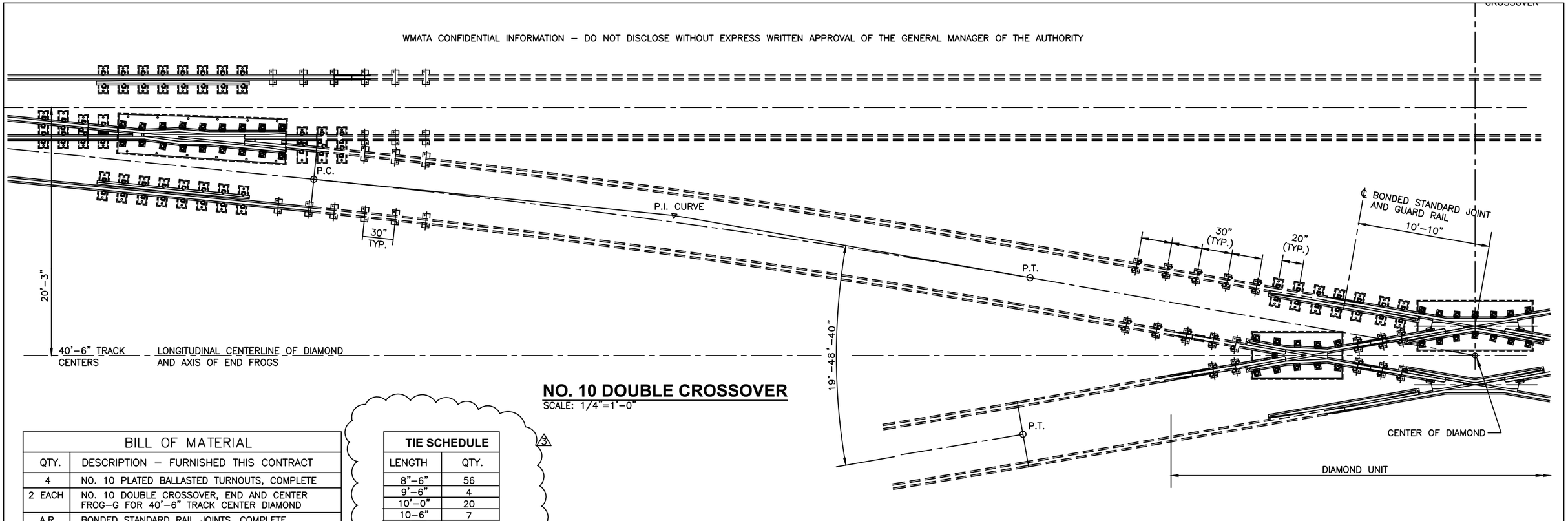

NO. 10 DOUBLE CROSSOVER

SCALE: 1/4"=1'–0"

BILL OF MATERIAL	
QTY.	DESCRIPTION – FURNISHED THIS CONTRACT
4	NO. 10 PLATED BALLASTED TURNOUTS, COMPLETE
2 EACH	NO. 10 DOUBLE CROSSOVER, END AND CENTER FROG–G FOR 40'–6" TRACK CENTER DIAMOND
A.R.	BONDED STANDARD RAIL JOINTS, COMPLETE
A.R.	BONDED INSULATED RAIL JOINTS, COMPLETE
A.R.	ELASTOMER PADS AT EVERY PLATE FOR 7/8" SCREW SPIKES

BILL OF MATERIAL	
QTY.	DESCRIPTION – FURNISHED BY OTHERS
A.R.	GROUT PADS
A.R.	INSERT AND ANCHOR ASSEMBLY, ANCHORING MATERIAL
A.R.	BONDED RAIL JOINTS TO CONNECT TURNOUTS AND DIAMOND TO CWR

TIE SCHEDULE	
LENGTH	QTY.
8"–6"	56
9'–6"	4
10'–0"	20
10–6"	7
11'–0"	2
11'–6"	2
12'–0"	2
12'–6"	2
13'–0"	2
13'–6"	2
14'–0"	2
14'–6"	2
15'–0"	2
15'–6"	2
16'–0"	2
16'–6"	2
TOTAL	111

* DIAMOND TIE SCHEDULE ONLY. TURNOUT TIE SCHEDULE NOT INCLUDED.

CURVE DATA	
Δ	4°–10'–51"
R	812.84
T	29.67'
Lc	59.3142'
E	6 7/8"
SE	0

NOTES:

1. SEE DWG No. ST–TW–048 FOR No.10 TURNOUT DATA.
2. CROSSOVER IS SYMMETRICALLY ROTATED ABOUT CENTER OF DIAMOND.

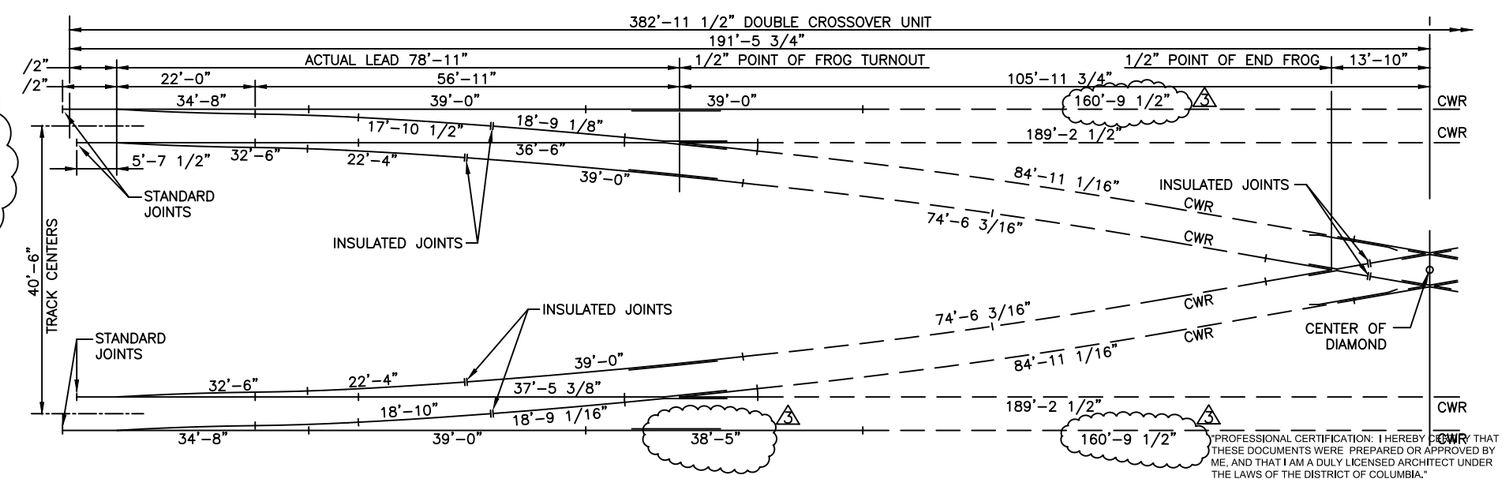

NO. 10 DOUBLE CROSSOVER, RAIL LAYOUT DIAGRAM

SCALE: 3/32"=1'0"

"PROFESSIONAL CERTIFICATION: I HEREBY CERTIFY THAT THESE DOCUMENTS WERE PREPARED OR APPROVED BY ME, AND THAT I AM A DULY LICENSED ARCHITECT UNDER THE LAWS OF THE DISTRICT OF COLUMBIA."

LICENSE No. _____

EXPIRATION DATE: _____

- DC REGISTER SECTION 3413

DESIGNED	R. REYES	04/06 DATE
DRAWN	A. DAVIS	07/07 DATE
CHECKED	RAVI AMIN	01/15 DATE

REFERENCE DRAWINGS

NUMBER	TITLE

REVISIONS

DATE	NUM	DESCRIPTION
07/06	01	Added Information to Plan View
10/07	02	Revised Delta Angle
07/13	03	AddTie Schedule & Revise Rail Layout Diminsion
01/15	04	Revised Title Block and Changed DD to read ST

WASHINGTON METROPOLITAN AREA TRANSIT AUTHORITY

DEPARTMENT OF TRANSIT INFRASTRUCTURE AND ENGINEERING SERVICES
CENI - TRACK STRUCTURES & FACILITIES

REVISION SUBMITTED _____ DATE

APPROVED _____ DATE
THOMAS ROBINSON
DEPUTY CHIEF ENGINEER

TRACKWORK STANDARD DRAWING
NO. 10 PLATED DOUBLE CROSSOVER, TYPE 1
QUARTER UNIT, 40'-6" TRACK CENTERS, PLAN,
DIRECT FIXATION TRACK

CONTRACT NO.	SCALE	DRAWING NO.	SHEET NO.
FQ-	AS SHOWN	ST-TW-081	## of .

WMATA CONFIDENTIAL INFORMATION – DO NOT DISCLOSE WITHOUT EXPRESS WRITTEN APPROVAL OF THE GENERAL MANAGER OF THE AUTHORITY

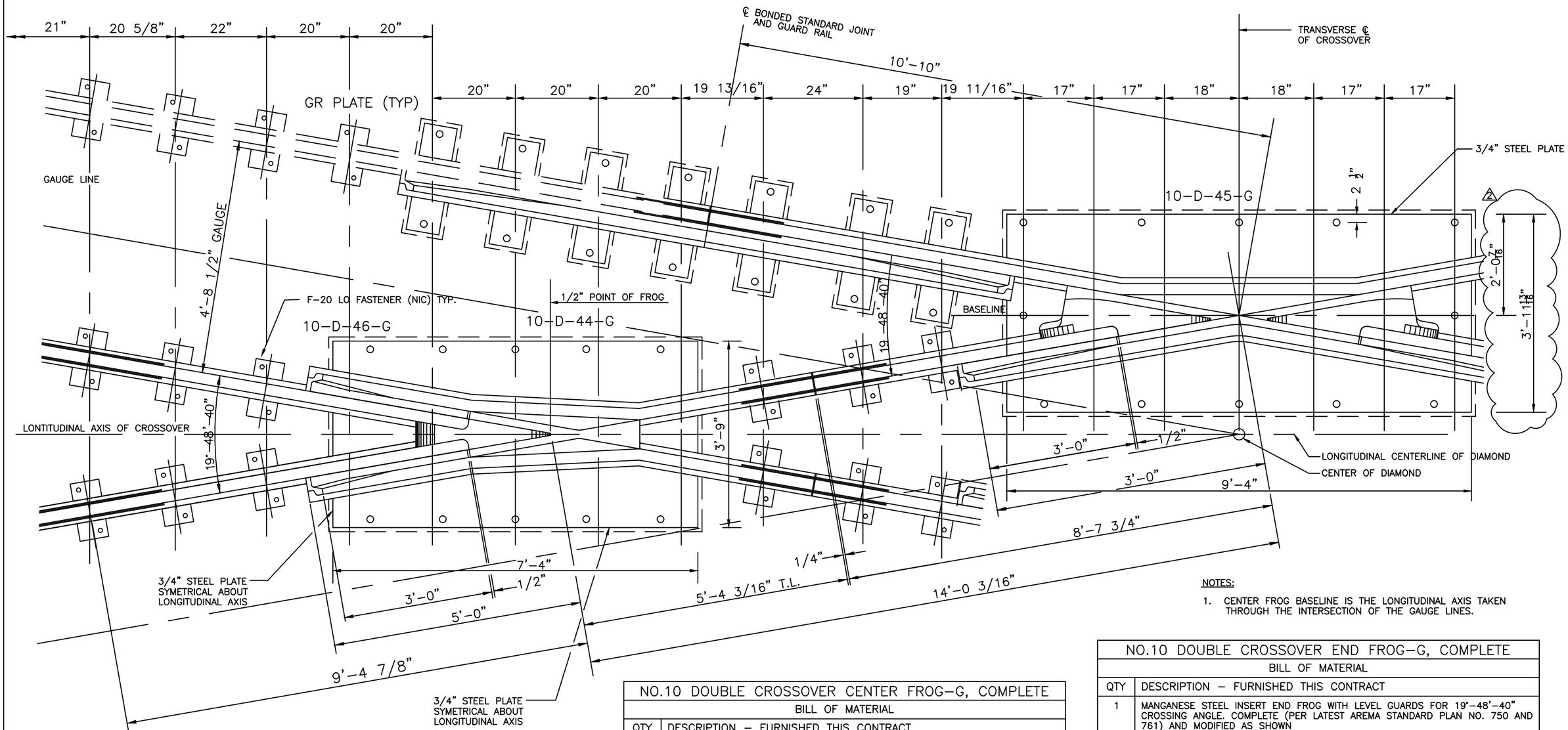

NOTES:

1. CENTER FROG BASELINE IS THE LONGITUDINAL AXIS TAKEN THROUGH THE INTERSECTION OF THE GAUGE LINES.

NO.10 DOUBLE CROSSOVER CENTER FROG–G, COMPLETE	
BILL OF MATERIAL	
QTY	DESCRIPTION – FURNISHED THIS CONTRACT
1	MANGANESE STEEL INSERT CENTER FROG WITH LEVEL GUARDS FOR 19°–48'–40" CROSSING ANGLE, COMPLETE (PER LATEST AREMA STANDARD PLAN NOS. 750 AND 761) AND MODIFIED AS SHOWN
1	SPECIAL PLATE 10–D–45–G, COMPLETE
2	BONDED FROG INSERTS
A.R.	ELASTOMER PADS AT EVERY PLATE
13	BOLTLESS ADJUSTABLE BRACE WITH LEFT HAND PANDROL CLIPS e2056

NO.10 DOUBLE CROSSOVER END FROG–G, COMPLETE	
BILL OF MATERIAL	
QTY	DESCRIPTION – FURNISHED THIS CONTRACT
1	MANGANESE STEEL INSERT END FROG WITH LEVEL GUARDS FOR 19°–48'–40" CROSSING ANGLE. COMPLETE (PER LATEST AREMA STANDARD PLAN NO. 750 AND 761) AND MODIFIED AS SHOWN
1 EA	SPECIAL PLATE 10–D–44–G AHD 10–D–46–G, COMPLETE
2	BONDED FROG INSERTS
10	BOLTLESS ADJUSTABLE BRACE WITH LEFT HAND PANDROL CLIPS e2056

"PROFESSIONAL CERTIFICATION: I HEREBY CERTIFY THAT THESE DOCUMENTS WERE PREPARED OR APPROVED BY ME, AND THAT I AM A DULY LICENSED ARCHITECT UNDER THE LAWS OF THE DISTRICT OF COLUMBIA."

LICENSE No. _____.

EXPIRATION DATE: _____.

- DC REGISTER SECTION 3413

DESIGNED	R. REYES	04/06 DATE
DRAWN	A. DAVIS	07/07 DATE
CHECKED	RAVI AMIN	. DATE

REFERENCE DRAWINGS

NUMBER	TITLE

REVISIONS

DATE	NUM	DESCRIPTION
07/07	01	Added Information to Plan View
07/13	02	Revised Steel Plate Dimension
01/15	03	Revised Title Block and Changed DD to read ST

WASHINGTON METROPOLITAN AREA TRANSIT AUTHORITY

DEPARTMENT OF TRANSIT INFRASTRUCTURE AND ENGINEERING SERVICES
CENI - TRACK STRUCTURES & FACILITIES

REVISION SUBMITTED _____ DATE

APPROVED _____ DATE
THOMAS ROBINSON
DEPUTY CHIEF ENGINEER

TRACKWORK STANDARD DRAWINH
NO. 10 PLATED DOUBLE CROSSOVER, 40'-6"
TRACK CENTERS, DIAMOND & END FROG DETAIL,
DIRECT FIXATION TRACK

CONTRACT NO.	SCALE	DRAWING NO.	SHEET NO.
FQ-	AS SHOWN	ST-TW-082	## of .

NOTE #1: END PLATE DETAIL A IS BASED ON 55E SWITCH MANCHLE

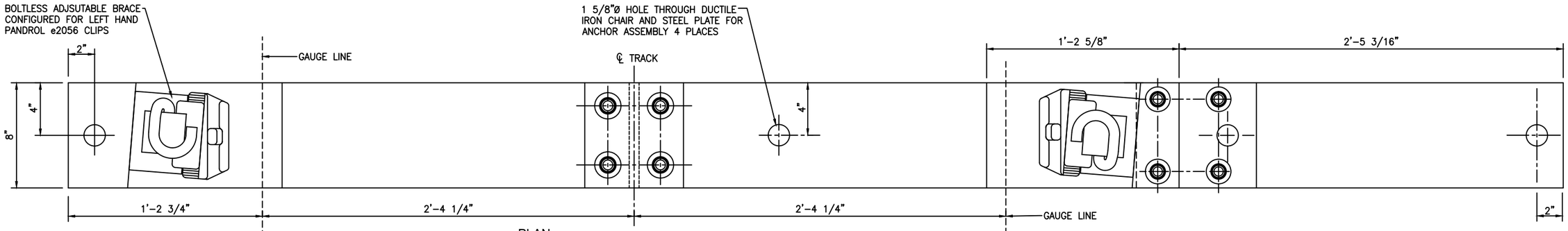

PLAN
SCALE: 1/4"=1"

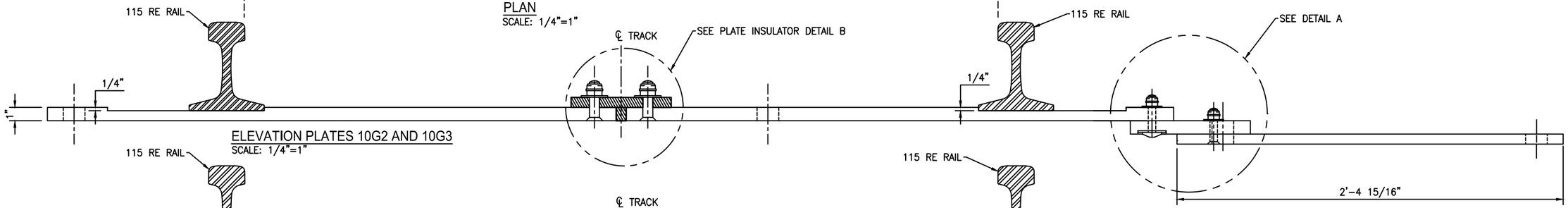

ELEVATION PLATES 10G2 AND 10G3
SCALE: 1/4"=1"

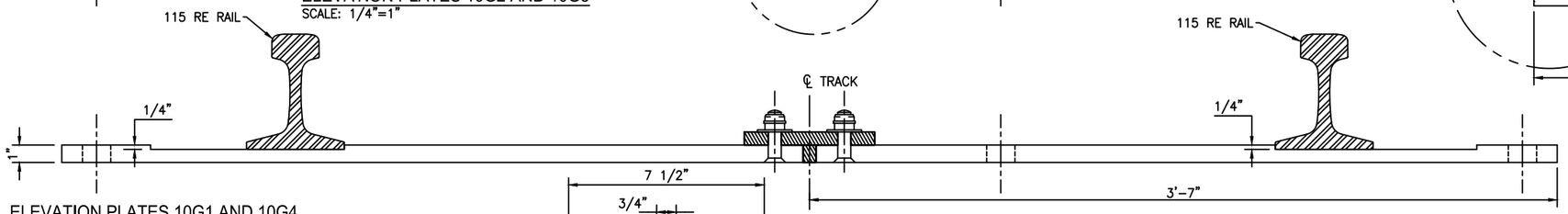

ELEVATION PLATES 10G1 AND 10G4
SCALE: 1/4"=1"

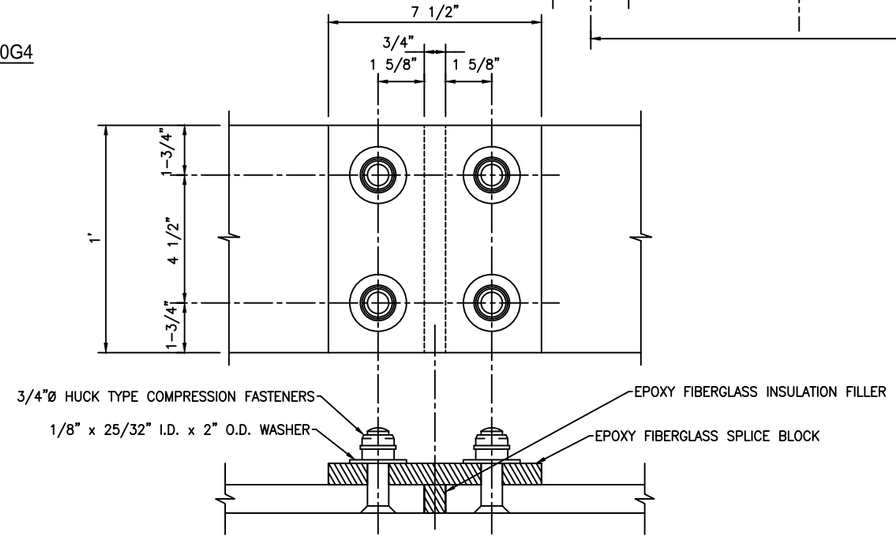

DETAIL B - PLATE INSULATOR
SCALE: 3/8"=1"

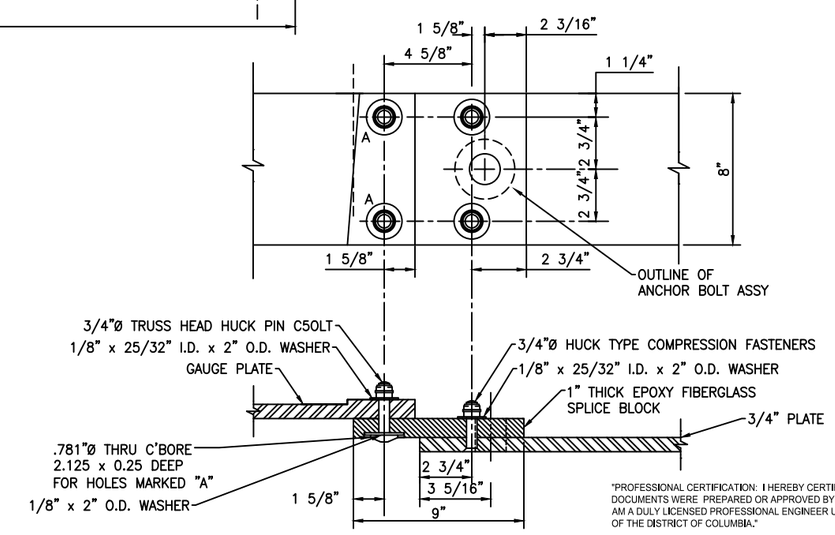

DETAIL A
SCALE: 1/4"=1"

"PROFESSIONAL CERTIFICATION: I HEREBY CERTIFY THAT THESE DOCUMENTS WERE PREPARED OR APPROVED BY ME, AND THAT I AM A DULY LICENSED PROFESSIONAL ENGINEER UNDER THE LAWS OF THE DISTRICT OF COLUMBIA."

LICENSE No. .

EXPIRATION DATE: .

- DC REGISTER SECTION 1516

DESIGNED	.	. DATE
DRAWN	.	. DATE
CHECKED	RAVI AMIN	01/15 DATE

REFERENCE DRAWINGS

NUMBER	TITLE

REVISIONS

DATE	NUM	DESCRIPTION
09/07	01	Revised Title to Reflect No. 10
06/13	02	Added Note to Reference a 55E Switch
01/15	01	Revised Title Block and Changed DD to read ST

WASHINGTON METROPOLITAN AREA TRANSIT AUTHORITY

DEPARTMENT OF TRANSIT INFRASTRUCTURE AND ENGINEERING SERVICES
CENI - CONSTRUCTION & DESIGN

REVISION SUBMITTED _____ DATE

APPROVED _____ DATE
THOMAS ROBINSON
DEPUTY CHIEF ENGINEER

TRACKWORK STANDARD DRAWING
NO. 10 TURNOUT DETAILS
DIRECT FIXATION TRACK
SHEET 1 OF 2

CONTRACT NO.	SCALE	DRAWING NO.	SHEET NO.
FQ-	AS SHOWN	ST-TW-085	## of .

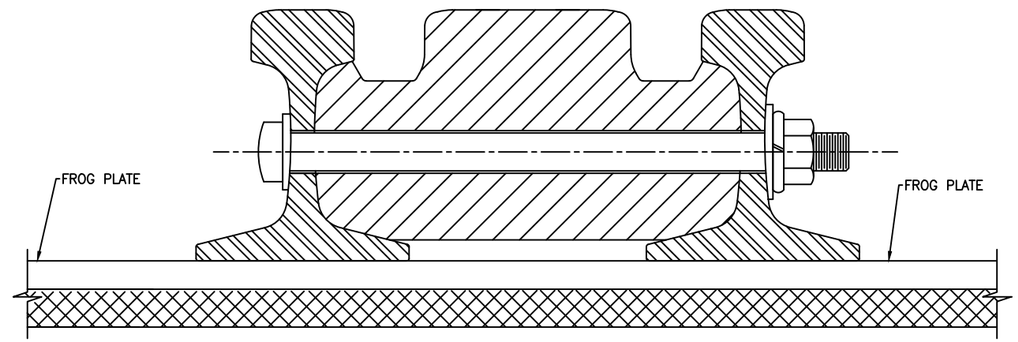

SECTION A-A - PLATED FROG
NOT TO SCALE

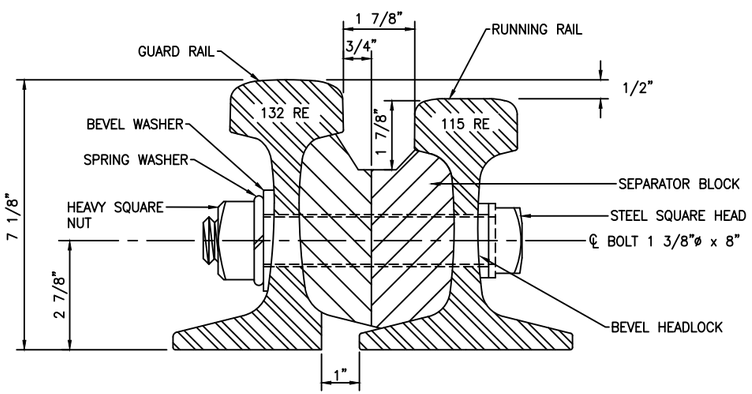

SECTION C-C - SEPARATOR BLOCK
NOT TO SCALE

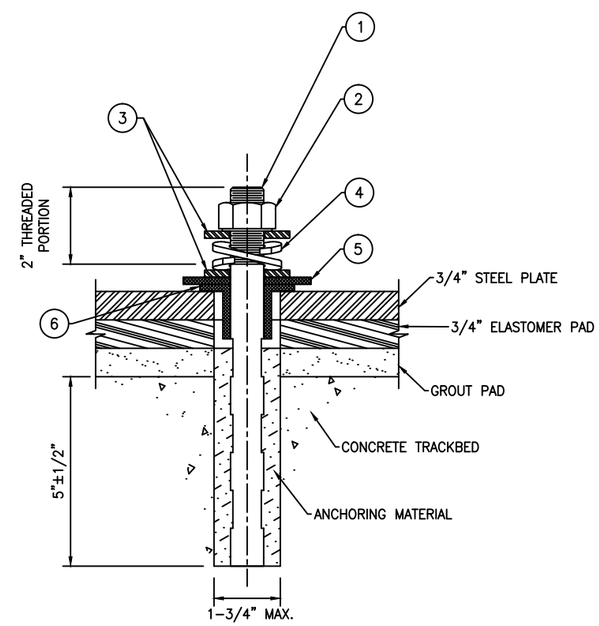

SPECIAL PLATE ANCHOR ASSEMBLY
NOT TO SCALE

BILL OF MATERIAL – ANCHOR ASSEMBLY		
ITEM	QTY.	DESCRIPTION – FURNISHED BY OTHERS
1	1	STEEL STUD 7/8"x10" ASTM–A449
2	1	STEEL HEX NUT FOR 7/8"ø BOLT, WASHER FACED, ASTM–A–325
3	2	STEEL WASHER, 15/16" I.D., 2–1/4" O.D., 3/16" THICK, ASTM–A–325
4	1	DOUBLE COIL SPRING WASHER
5	1	INSULATING FIBER WASHER, 1–9/32" I.D., 3–3/8" O.D.
6	1	ONE PIECE – INSULATING FIBER WASHER (29/32" I .D., 2–1/2" O.D.) AND INSULATING FIBER SLEEVE (29/32" I.D., 1–9/32" O.D.)

"PROFESSIONAL CERTIFICATION: I HEREBY CERTIFY THAT THESE DOCUMENTS WERE PREPARED OR APPROVED BY ME, AND THAT I AM A DULY LICENSED ARCHITECT UNDER THE LAWS OF THE DISTRICT OF COLUMBIA."

LICENSE No. _____

EXPIRATION DATE: _____

- DC REGISTER SECTION 3413

DESIGNED . _____ . DATE
DRAWN . _____ . DATE
CHECKED RAVI AMIN _____ 01/15 DATE

REFERENCE DRAWINGS

NUMBER	TITLE

REVISIONS

DATE	NUM	DESCRIPTION
09/07	01	Revised Title to Reflect NO. 10
01/15	02	Revised Title Block and Changed DD to read ST

WASHINGTON METROPOLITAN AREA TRANSIT AUTHORITY

DEPARTMENT OF TRANSIT INFRASTRUCTURE AND ENGINEERING SERVICES
CENI - TRACK STRUCTURES & FACILITIES

REVISION SUBMITTED _____ DATE

APPROVED _____ DATE
THOMAS ROBINSON
DEPUTY CHIEF ENGINEER

TRACKWORK STANDARD DRAWING
NO. 10 TURNOUT, DETAILS,
DIRECT FIXATION TRACK
SHEET 2 OF 2

CONTRACT NO.	SCALE	DRAWING NO.	SHEET NO.
FQ-	NOT TO SCALE	ST-TW-086	## of .

WMATA CONFIDENTIAL INFORMATION – DO NOT DISCLOSE WITHOUT EXPRESS WRITTEN APPROVAL OF THE GENERAL MANAGER OF THE AUTHORITY

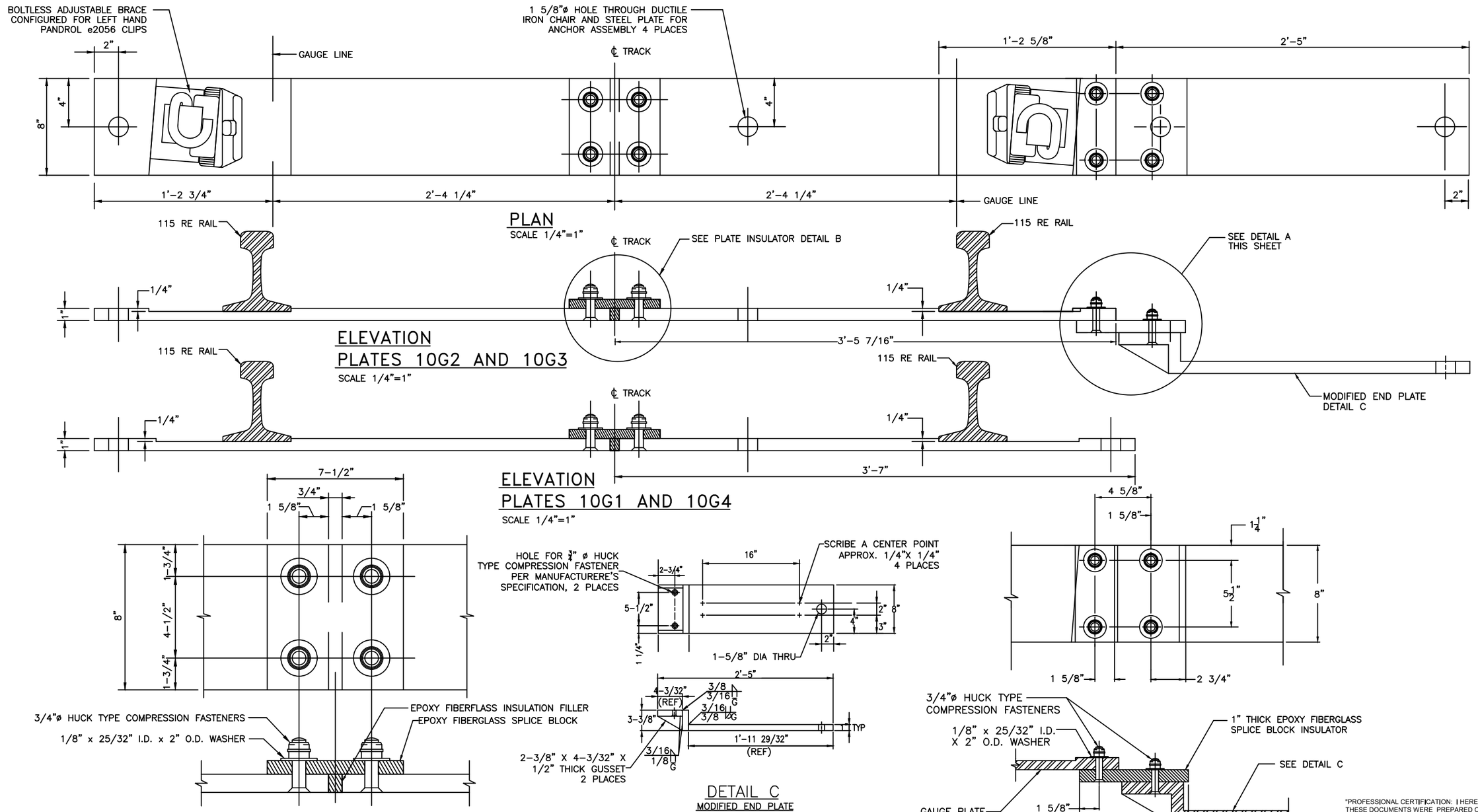

"PROFESSIONAL CERTIFICATION: I HEREBY CERTIFY THAT THESE DOCUMENTS WERE PREPARED OR APPROVED BY ME, AND THAT I AM A DULY LICENSED ARCHITECT UNDER THE LAWS OF THE DISTRICT OF COLUMBIA."

LICENSE No. _____.

EXPIRATION DATE: _____.

- DC REGISTER SECTION 3413

DESIGNED	TSFA	06/13 DATE
DRAWN	E. SSALI	06/13 DATE
CHECKED	RAVI AMIN	01/15 DATE

REFERENCE DRAWINGS

NUMBER	TITLE

REVISIONS

DATE	NUM	DESCRIPTION

WASHINGTON METROPOLITAN AREA TRANSIT AUTHORITY

DEPARTMENT OF TRANSIT INFRASTRUCTURE AND ENGINEERING SERVICES
CENI - TRACK STRUCTURES & FACILITIES

REVISION SUBMITTED _____ DATE

APPROVED _____ DATE
THOMAS ROBINSON
DEPUTY CHIEF ENGINEER

TRACKWORK STANDARD DRAWING
NO. 10 TURNOUT, DETAILS, INSULATOR,
DIRECT FIXATION TRACK,
MODIFIED END PLATE FOR M3 SWITCH MACHINE

CONTRACT NO.	SCALE	DRAWING NO.	SHEET NO.
FQ-	AS NOTED	ST-TW-091	## of .

WMATA CONFIDENTIAL INFORMATION – DO NOT DISCLOSE WITHOUT EXPRESS WRITTEN APPROVAL OF THE GENERAL MANAGER OF THE AUTHORITY

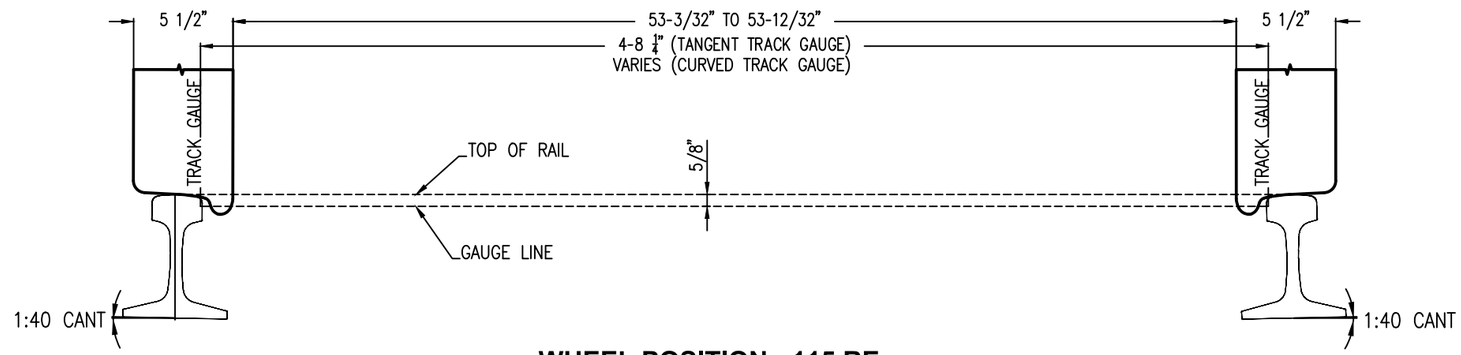

WHEEL POSITION - 115 RE

SCALE: NTS

MATHEMATICAL ATTRIBUTES	
MOMENT OF INERTIA	65.60
BASE TO NEUTRAL AXIS (IN)	2.98
SECTION MODULUS (BASE)	22.00
AREA (SQ. IN)	11.25

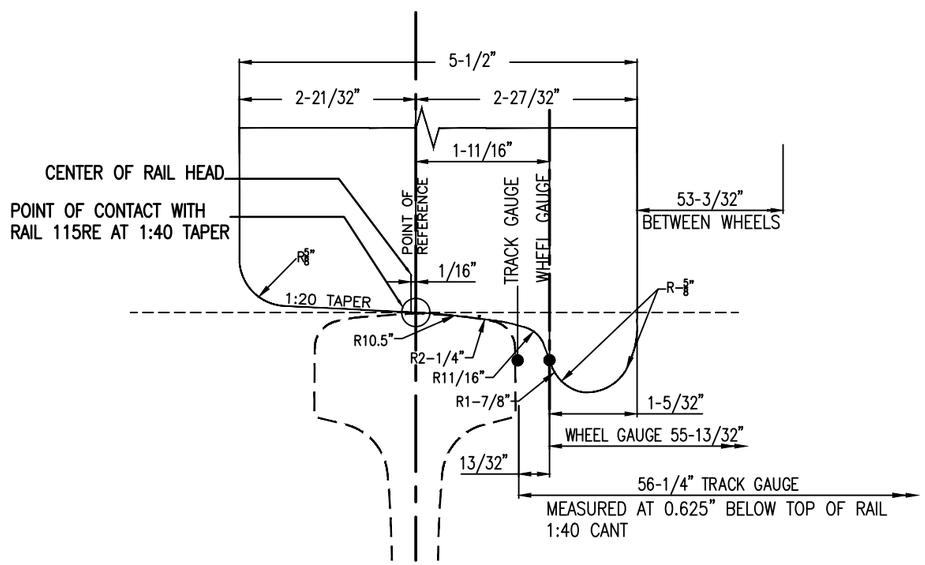

FLANGE WHEEL PROFILE - 115 RE, TRACK GAUGE=4'-8 1/4"

SCALE: NTS

RAIL SECTION		
1. RAIL AREA (SQUARE INCH)		
	HEAD	3.9156
	WEB	3.0363
	BASE	4.2947
	WHOLE RAIL	11.2465
2. RAIL WEIGHT (LB/YD) (BASE OF SPECIFIC GRAVITY OF RAIL STEEL = 7.84)		114.6758
3. MOMENT OF INERTIA ABOUT THE NEUTRAL AXIS		65.90
4. SECTION MODULUS OF THE HEAD		18.10
5. SECTION OF THE BASE		22.00
6. HEIGHT OF NEUTRAL AXIS ABOVE BASE		3.00
7. LATERAL MOMENT OF INERTIA		10.70
8. LATERAL SECTION MODULUS OF THE HEAD		7.90
9. LATERAL SECTION MODULUS OF THE BASE		3.90
10. HEIGHT OF SHEAR CENTER ABOVE BASE		1.45
11. TORSIONAL RIGIDITY IS 'KG' WHERE G IS THE MODULUS OF RIGIDITY AND K= (ERROR FOR K GREATER THAN 10%)		4.69

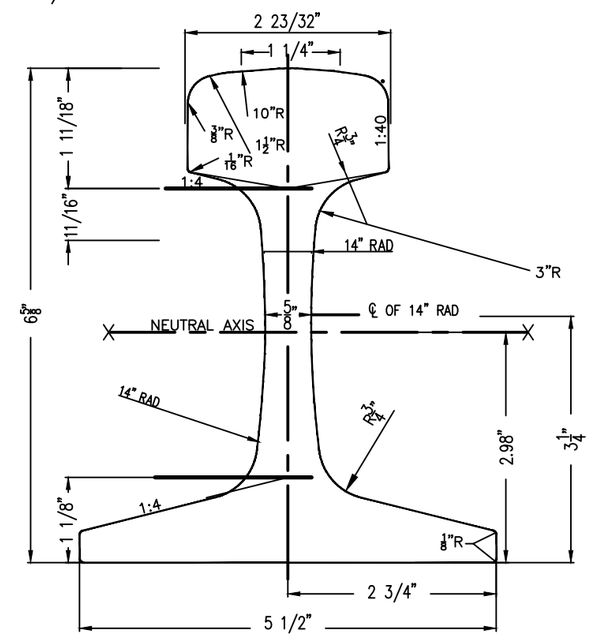

X–AREA = 11.25 IN^2
WEIGHT = 115.00 LB/YD

115 RE

SCALE: NTS

"PROFESSIONAL CERTIFICATION: I HEREBY CERTIFY THAT THESE DOCUMENTS WERE PREPARED OR APPROVED BY ME, AND THAT I AM A DULY LICENSED ARCHITECT UNDER THE LAWS OF THE DISTRICT OF COLUMBIA."

LICENSE No. _____

EXPIRATION DATE: _____

- DC REGISTER SECTION 3413

DESIGNED	TSFA	06/13 DATE
DRAWN	E. SSALI	06/13 DATE
CHECKED	RAVI AMIN	01/15 DATE

REFERENCE DRAWINGS

NUMBER	TITLE

REVISIONS

DATE	NUM	DESCRIPTION

WASHINGTON METROPOLITAN AREA TRANSIT AUTHORITY

DEPARTMENT OF TRANSIT INFRASTRUCTURE AND ENGINEERING SERVICES
CENI - TRACK STRUCTURES & FACILITIES

REVISION SUBMITTED _____ DATE

APPROVED _____ DATE
THOMAS ROBINSON
DEPUTY CHIEF ENGINEER

TRACKWORK STANDARD DRAWING
115 LB. RAIL SECTION AND WHEEL RAIL POSITION

.

CONTRACT NO.	SCALE	DRAWING NO.	SHEET NO.
FQ-	NOT TO SCALE	ST-TW-094	## of .

WMATA CONFIDENTIAL INFORMATION – DO NOT DISCLOSE WITHOUT EXPRESS WRITTEN APPROVAL OF THE GENERAL MANAGER OF THE AUTHORITY

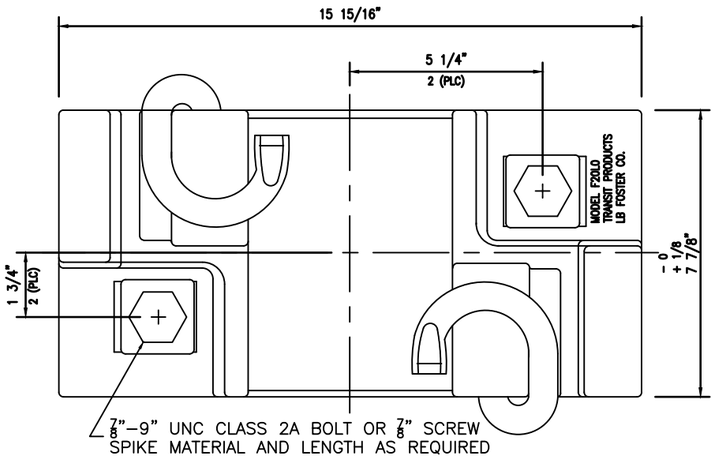

STANDARD DIRECT FIXATION RAIL FASTENER
NTS

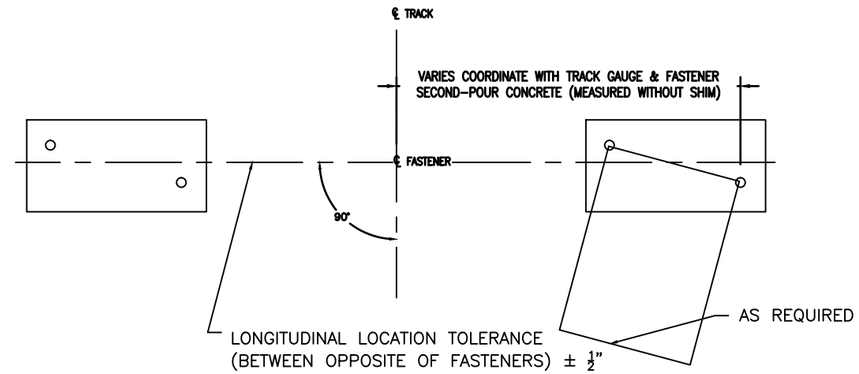

INSERT LOCATION TOLERANCE
NTS

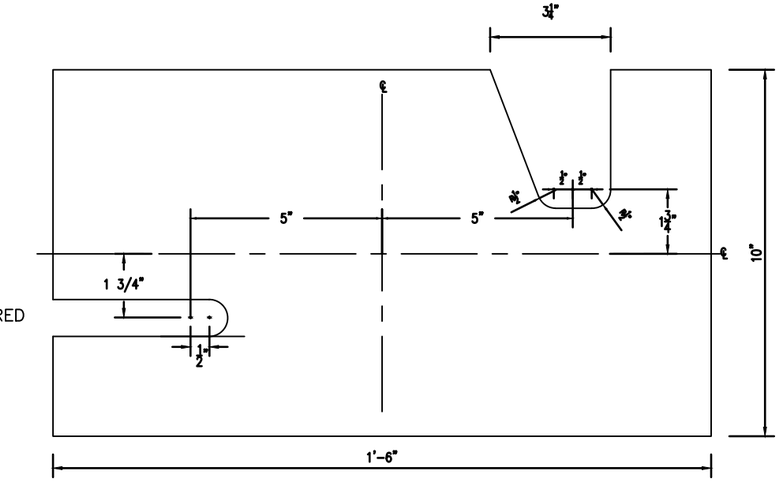

STANDARD DIRECT FIXATION FASTENER SHIM CONFIGURATION
NTS

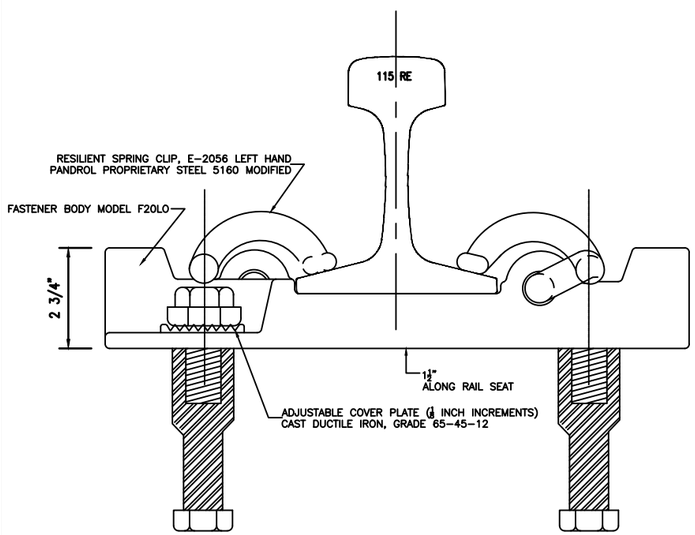

FASTENER - FRONT VIEW
NTS

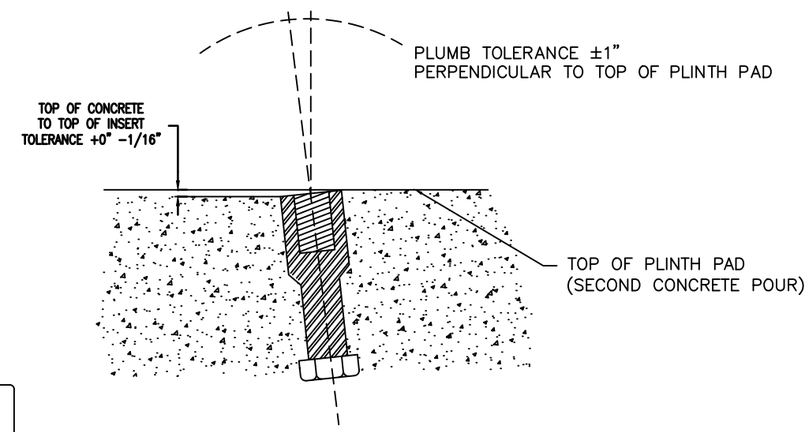

INSERT VERTICAL TOLERANCE
NTS

DIRECT FIXATION RAIL FASTENER	
BILL OF MATERIAL	
QTY	***DESCRIPTION***
1	*RAIL FASTENER BODY (NON-BONNDED OR BONDED WITH ELASTOMER)*
2	*RESILIENT, RAIL CLIP, E-2055 (SEE NOTE 4)*
2	*LATERAL ADJUSTMENT WASHER*
2	*LOCK WASHER*
2	*ANCHOR INSERT*
2	*ANCHOR BOLT*
A/R	*FASTENERS HEIGHT ADJUSTMENT SHIMS OF 1/16", 1/8" AND 1/4" THICKNESS (SEE NOTE 7 AND 8)*
A/R	*EPOXY GROUT (FOR DRILL & GROUT METHOD)*
A/R	*ELASTOMER PAD (FOR NON-BONDED FASTENERS ONLY)*

NOTES:

1. ALL OF FASTENER SPACING SHALL BE 30" OF TANGENT TRACK. EXCEPT FOR SPECIAL TRACKWORK
2. PLINTH CONCRETE SHALL BE PLACED IN SEGMENTS. SEGMENTS SHALL BE 20" WIDE, NOT LESS THAN 9', NOR MORE THAN 10' IN LENGHT
3. PLINTH SHALL NOT OVERLAP ANY STRUCTURAL JOINTS.
4. WHERE DF RAIL FASTENERS ARE LOCATED UNDER RAIL JOINTS, (ISOLATION JOINTS) INSTALL PANDROL TYPE c–CLIPS OR J–CLIPS OR APPROVED EQUAL.
5. GAPS IN PLINTH PADS SHALL BE LOCATED AS REQUIRED FOR STRUCTURAL JOINTS, DRAINAGE AND PASSAGE OF SIGNAL OR OTHER CABLES.
6. THE TOTAL BASE THICKNESS (h) OF THE STANDARD DIRECT FIXATION FASTENERS WILL DEPEND ON THE APPROVED FASTENER TO BE SUPPLIED AND INSTALLED BY ADJUSTMENT SHIMS. STANDARD DIRECT FIXATION FASTENER CAN BE AUPPLIED WITH NON–BONDED OR BONDED TYPE INSULATION WITH THE FOLLOWING APPROXIMATE THICKNESS.
   a. STANDARD FASTENER (NON–BONDED): H=1 13/32 INCHES
   b. STANDARD FASTENER (BONDED): H= 1 1/2 INCHES
   c. THE FASTENER'S SHIMS SHALL PROVIDE 1/2" MINIMUM HORIZONTAL PROJECTION BEYOND ALL SIDES OF THE FASTENERS AT ANY INSTALLED POSITION.
   d. TOTAL NUMBER OF SHIMS PLACED UNDER RAIL FASTENER BODY FOR HEIGHT ADJUSTMENT SHALL BE LIMITED TO A MAXIMUM OF TWO SHIMS AND MAXIMUM TOTAL THICKNESS OF 1/2"

"PROFESSIONAL CERTIFICATION: I HEREBY CERTIFY THAT THESE DOCUMENTS WERE PREPARED OR APPROVED BY ME, AND THAT I AM A DULY LICENSED ARCHITECT UNDER THE LAWS OF THE DISTRICT OF COLUMBIA."

LICENSE No. _____.

EXPIRATION DATE: _____.

- DC REGISTER SECTION 3413

DESIGNED	TSFA	06/13 DATE
DRAWN	E. SSALI	06/13 DATE
CHECKED	RAVI AMIN	01/15 DATE

REFERENCE DRAWINGS		REVISIONS		
NUMBER	TITLE	DATE	NUM	DESCRIPTION

WASHINGTON METROPOLITAN AREA TRANSIT AUTHORITY

DEPARTMENT OF TRANSIT INFRASTRUCTURE AND ENGINEERING SERVICES
CENI - TRACK STRUCTURES & FACILITIES

REVISION SUBMITTED _____ DATE

APPROVED _____ DATE
THOMAS ROBINSON
DEPUTY CHIEF ENGINEER

TRACKWORK STANDARD DRAWING
STANDARD DIRECT FIXATION AND RAIL FASTENER DETAILS

CONTRACT NO.	SCALE	DRAWING NO.	SHEET NO.
FQ-	NOT TO SCALE	ST-TW-097	## of .

WMATA CONFIDENTIAL INFORMATION – DO NOT DISCLOSE WITHOUT EXPRESS WRITTEN APPROVAL OF THE GENERAL MANAGER OF THE AUTHORITY

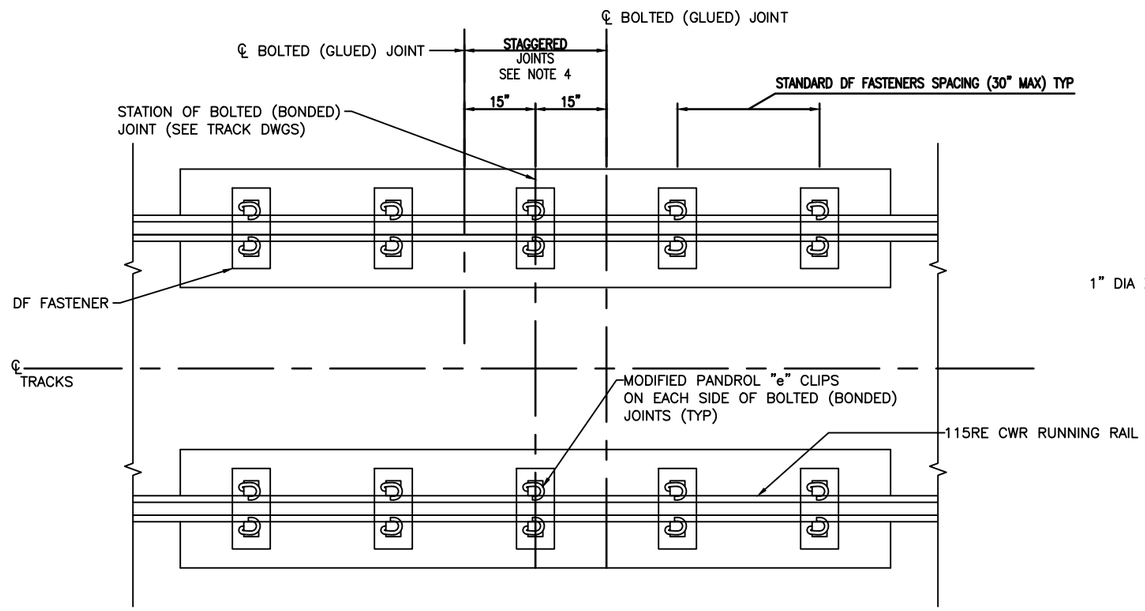

BONDED STANDARD JOINT ON DF TRACK DETAIL
NTS

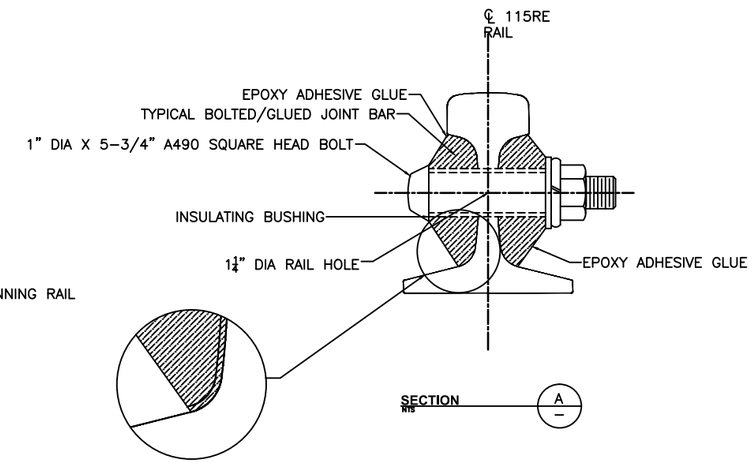

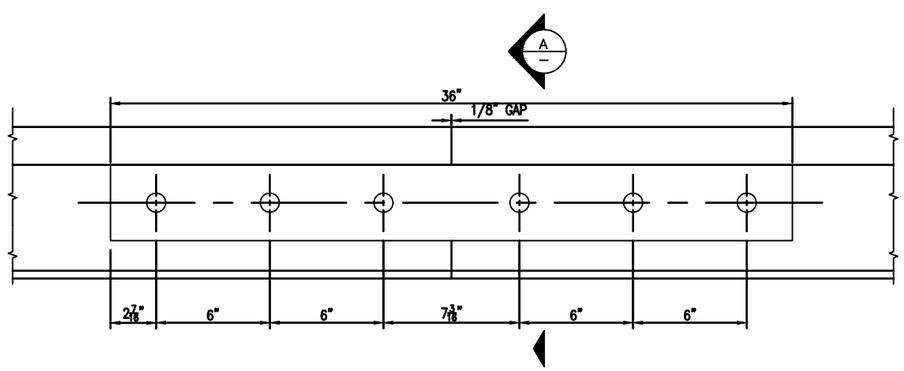

BONDED STANDARD JOINT BAR DETAIL
NTS

NOTES:

1. ALL HOLES DRILLED WITH A DRILL BIT (OR SIMILAR METHOD SHALL BE GROUND AND FILED SMOOTH SO TO ELIMINATE ROUGH EDGES. BEFORE ASSEMBLING A BONDED INSULATED JOINT, MAKE SURE RAIL AND JOINT BARS ARE CLEAN AND FREE OF METAL FILINGS.
2. SPRING CLIPS SHALL BE MODIFIED AS REQUIRED TO AVOID CONTACT BETWEEN RAIL CLIP AND JOINT BAR FOR INSULATED JOINTS TYPE 'C' OR TYPE 'J' CLIPS.
3. SEE SPECIFICATIONS FOR RAIL GAP DURING INSTALLATION
4. FOR PRIMARY TRACK STAGGERED JOINTS ONLY.

"PROFESSIONAL CERTIFICATION: I HEREBY CERTIFY THAT THESE DOCUMENTS WERE PREPARED OR APPROVED BY ME, AND THAT I AM A DULY LICENSED ARCHITECT UNDER THE LAWS OF THE DISTRICT OF COLUMBIA."

LICENSE No. _____.

EXPIRATION DATE: _____.

- DC REGISTER SECTION 3413

DESIGNED	TSFA	06/13 DATE
DRAWN	E. SSALI	06/13 DATE
CHECKED	RAVI AMIN	01/15 DATE

REFERENCE DRAWINGS

NUMBER	TITLE

REVISIONS

DATE	NUM	DESCRIPTION

WASHINGTON METROPOLITAN AREA TRANSIT AUTHORITY

DEPARTMENT OF TRANSIT INFRASTRUCTURE AND ENGINEERING SERVICES
CENI - TRACK STRUCTURES & FACILITIES

REVISION SUBMITTED _____ DATE

APPROVED _____ DATE
THOMAS ROBINSON
DEPUTY CHIEF ENGINEER

TRACKWORK STANDARD DRAWING
BONDED STANDARD JOINT DETAILS

.

CONTRACT NO.	SCALE	DRAWING NO.	SHEET NO.
FQ-	NOT TO SCALE	ST-TW-098	## of .

WMATA CONFIDENTIAL INFORMATION – DO NOT DISCLOSE WITHOUT EXPRESS WRITTEN APPROVAL OF THE GENERAL MANAGER OF THE AUTHORITY

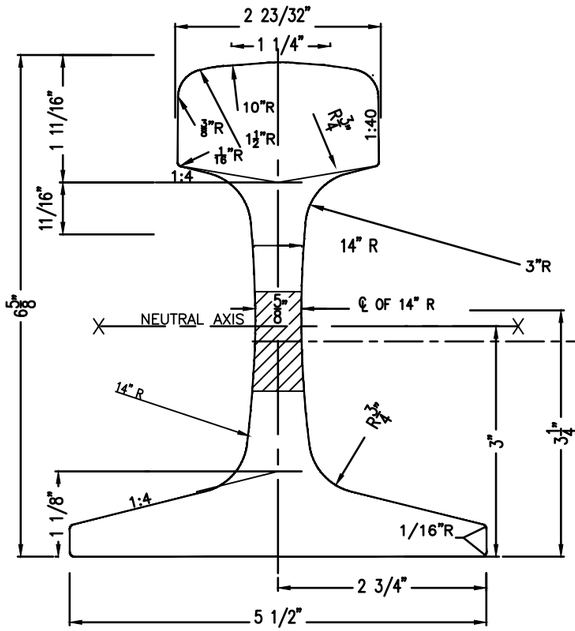

X–AREA = 11.25 IN^2
WEIGHT = 115.00 LB/YD

NOTE: RAIL WEIGHT (LB/YD) BASED ON SPECIFIC GRAVITY OF STEEL RAIL = 7.84) 114.6758

115 RE SECTION

NTS

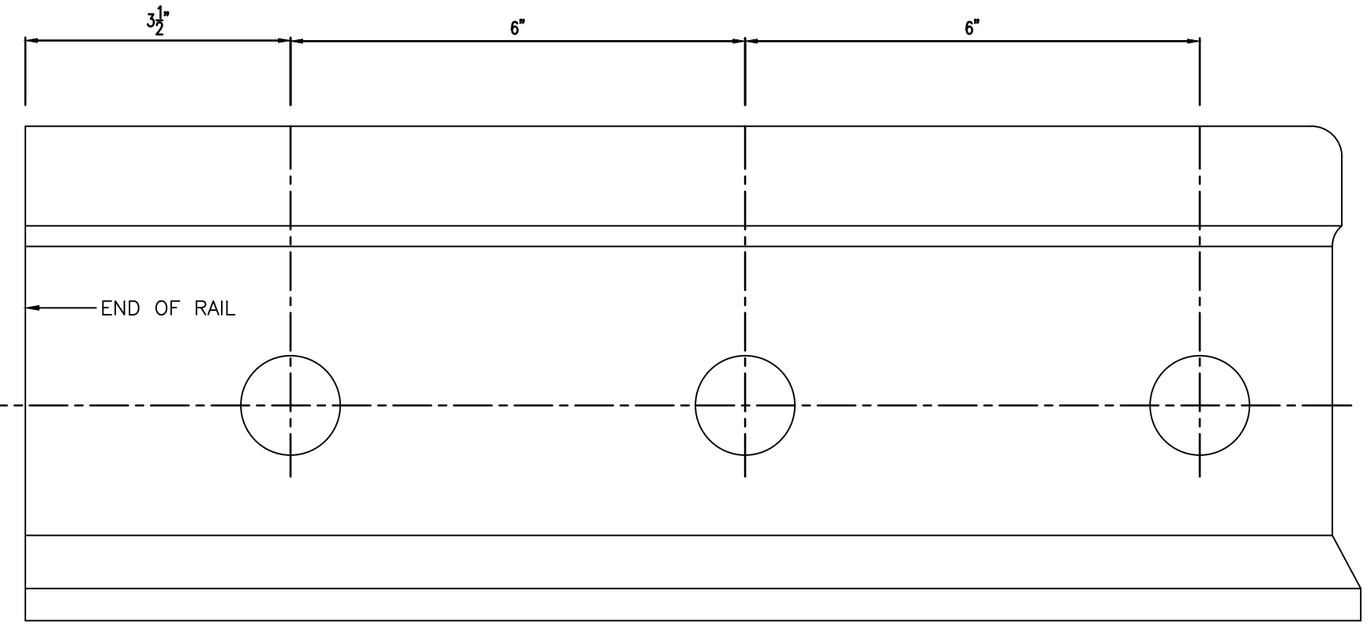

DRILLING

NTS

MATHEMATICAL ATTRIBUTES

AREA	SQ. INCHES
HEAD	3.9156
WEB	3.0363
BASE	4.2947
TOTAL	11.2465

HEIGHT OF NEUTRAL ABOVE BASE	3.00
LATERAL MOMENT OF INERTIA	10.7
LATERAL SECTION MODULUS OF HEAD	7.90
LATERAL SECTION MODULUS OF BASE	3.90
HEIGHT OF SHEAR CENTER ABOVE BASE	1.45
MOMENT OF INERTIA ABOUT NEUTRAL AXIS	65.9
SECTION MODULUS OF HEAD	18.1
SECTION MODULUS OF BASE	22.0

NOTE: RAILS SHALL BE IN ACCORDANCE WITH CURRENT AREMA MANUAL OF RAILWAY ENGINEERING, PART 4, RAIL.

"PROFESSIONAL CERTIFICATION: I HEREBY CERTIFY THAT THESE DOCUMENTS WERE PREPARED OR APPROVED BY ME, AND THAT I AM A DULY LICENSED ARCHITECT UNDER THE LAWS OF THE DISTRICT OF COLUMBIA."

LICENSE No. _____.

EXPIRATION DATE: _____.

- DC REGISTER SECTION 3413

DESIGNED	TSFA	06/13 DATE
DRAWN	E. SSALI	06/13 DATE
CHECKED	RAVI AMIN	01/15 DATE

REFERENCE DRAWINGS

NUMBER	TITLE

REVISIONS

DATE	NUM	DESCRIPTION

WASHINGTON METROPOLITAN AREA TRANSIT AUTHORITY

DEPARTMENT OF TRANSIT INFRASTRUCTURE AND ENGINEERING SERVICES
CENI - TRACK STRUCTURES & FACILITIES

REVISION SUBMITTED _____ DATE

APPROVED THOMAS ROBINSON, DEPUTY CHIEF ENGINEER _____ DATE

TRACKWORK STANDARD DRAWING
115 LB. RE RAIL SECTION AND DRILLING

.

CONTRACT NO.	SCALE	DRAWING NO.	SHEET NO.
FQ-	NOT TO SCALE	ST-TW-099	## of .

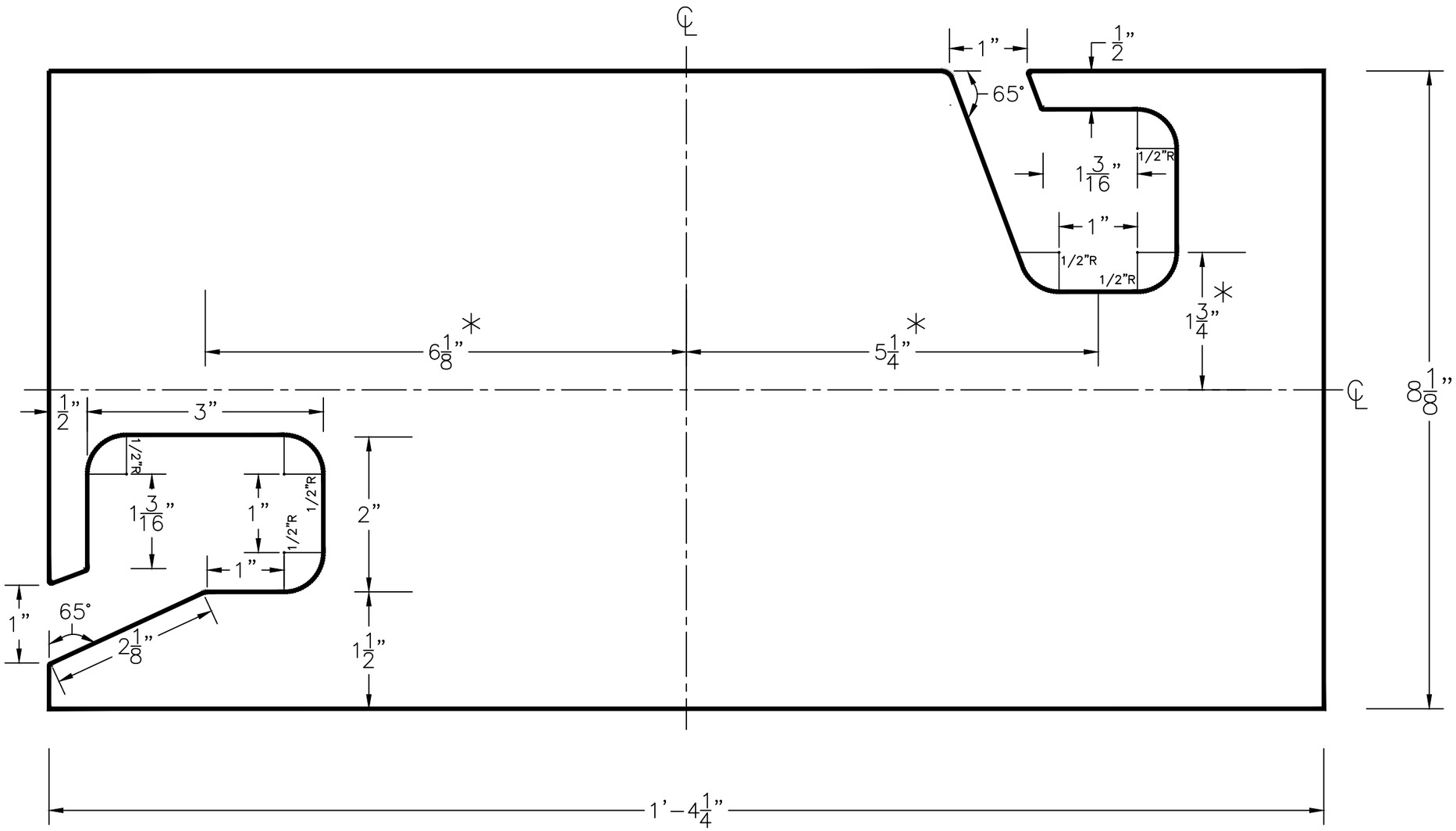

MATERIAL: HIGH-DENSITY POLYETHYLENE (HDPE) OR APPROVED EQUAL.

CANTED SHIMS APPLIES TO: 1/8",1/4",1/2" THICK SHIMS
*-0" +1/32"

NOTE: ALL DIMENSIONS TO BE WITHIN 1/32" EXCEPT AS NOTED

"PROFESSIONAL CERTIFICATION: I HEREBY CERTIFY THAT THESE DOCUMENTS WERE PREPARED OR APPROVED BY ME, AND THAT I AM A DULY LICENSED ARCHITECT UNDER THE LAWS OF THE DISTRICT OF COLUMBIA."

LICENSE No. _____

EXPIRATION DATE: _____

- DC REGISTER SECTION 3413

DESIGNED	RAVI AMIN	09/14 DATE
DRAWN	TSFA	09/14 DATE
CHECKED	B. ROCKEFELLER	01/15 DATE

REFERENCE DRAWINGS

NUMBER	TITLE

REVISIONS

DATE	NUM	DESCRIPTION

WASHINGTON METROPOLITAN AREA TRANSIT AUTHORITY

DEPARTMENT OF TRANSIT INFRASTRUCTURE AND ENGINEERING SERVICES
CENI - TRACK STRUCTURES & FACILITIES

DATE

APPROVED
THOMAS ROBINSON
DEPUTY CHIEF ENGINEER
DATE

TRACKWORK STANDARD DRAWING
FASTENER MODEL F20LR SHIM DETAIL
.

CONTRACT NO.	SCALE	DRAWING NO.	SHEET NO.
FQ-	NOT TO SCALE	ST-TW-101	## of .

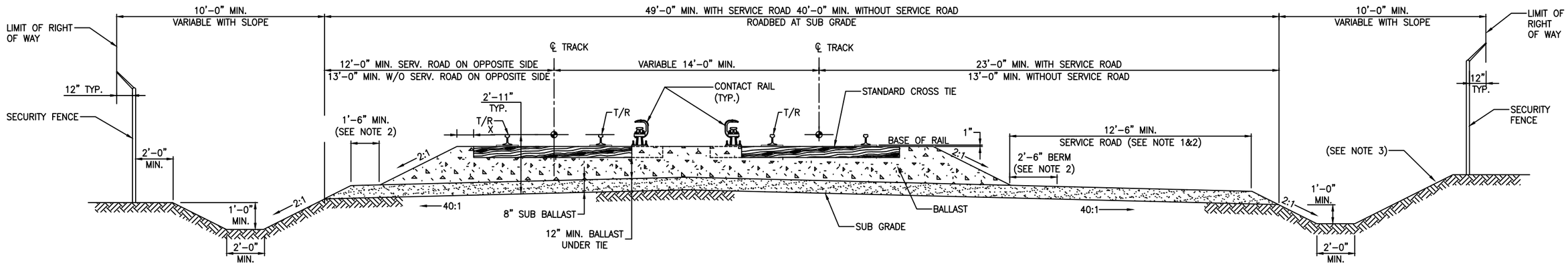

STANDARD ROADBED & BALLAST
SECTION FOR TANGENT TRACK

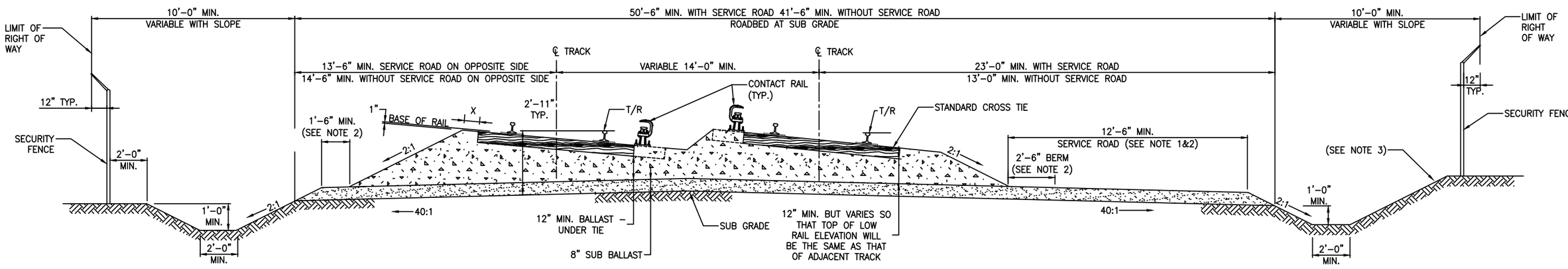

STANDARD ROADBED & BALLAST
SECTION FOR SUPER ELEVATED TRACK

TYPE OF TIE AT THE RECOMMENDED SPACING	WIDTH OF BALLAST SHOULDER (X)
7"x 9" x 8'-6" WOOD	10"
MONOBLOCK CONCRETE TIE	12"

NOTES:

1. THE SERVICE ROAD AS SHOWN IS DESIRABLE BUT NOT MANDATORY. FURTHERMORE, IT NEED NOT BE CONTINUOUS NOR ON THE SAME SIDE OF TRACKS. THE FEASIBILITY OF A SERVICE ROAD SHALL BE EVALUATED IN EACH LOCATION FOR THE AUTHORITY'S CONSIDERATION.
2. WHERE THERE IS NO SERVICE ROAD ON EITHER SIDE, THE SUB BALLAST BERM SHALL BE 2'-6" ON BOTH SIDES OF TRACK.
3. SLOPE TO BE DEPENDENT ON THE REQUIREMENTS OF EACH LOCATION.
4. THE TRANSITION FROM THE ROADBED AND BALLAST SECTION IS SHOWN FOR TANGENT TRACK. THE ROADBED AND BALLAST SECTION SHOWN FOR SUPER ELEVATED TRACK MAY BE MADE THROUGH THE LENGTH OF THE SPIRAL.
5. UNLESS OTHERWISE SPECIFIED, TOP OF BALLAST SHALL BE MAINTAINED 2" BELOW BASE OF RAIL.

"PROFESSIONAL CERTIFICATION: I HEREBY CERTIFY THAT THESE DOCUMENTS WERE PREPARED OR APPROVED BY ME, AND THAT I AM A DULY LICENSED ARCHITECT UNDER THE LAWS OF THE DISTRICT OF COLUMBIA."

LICENSE No. _____

EXPIRATION DATE: _____

- DC REGISTER SECTION 3413

DESIGNED K. WOJCICKI 06/07 DATE
DRAWN K. WOJCICKI 06/07 DATE
CHECKED RAVI AMIN 01/15 DATE

REFERENCE DRAWINGS

NUMBER	TITLE

REVISIONS

DATE	NUM	DESCRIPTION
01/15	01	Revised Title Block and Changed DD to read ST

WASHINGTON METROPOLITAN AREA TRANSIT AUTHORITY

DEPARTMENT OF TRANSIT INFRASTRUCTURE AND ENGINEERING SERVICES
CENI - TRACK STRUCTURES & FACILITIES

REVISION SUBMITTED _____ DATE

APPROVED _____ DATE
THOMAS ROBINSON
DEPUTY CHIEF ENGINEER

TRACKWORK STANDARD DRAWING
STANDARD ROADBED & BALLAST SECTION
METRO ON EXCLUSIVE RIGHT-OF-WAY
.

CONTRACT NO.	SCALE	DRAWING NO.	SHEET NO.
FQ-	NOT TO SCALE	ST-TW-110	## of .

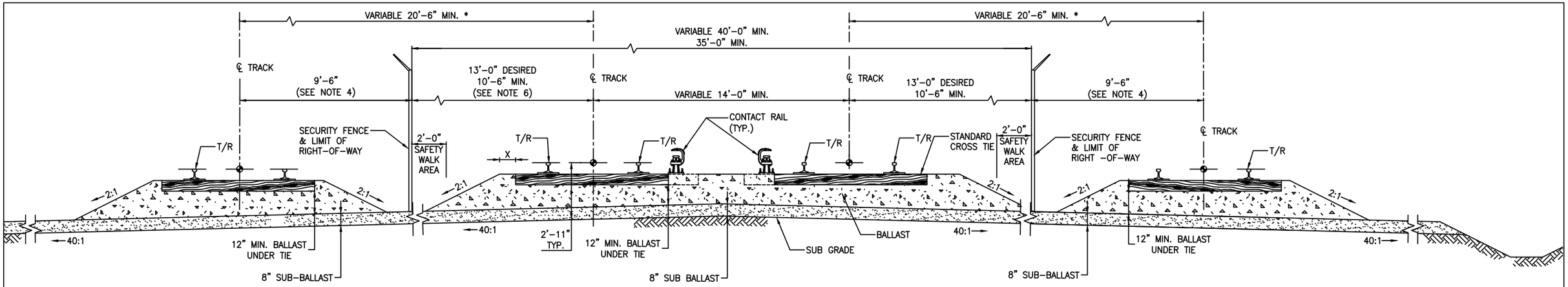

STANDARD ROADBED & BALLAST SECTION
FOR TRACK BETWEEN RAILROAD MAINS

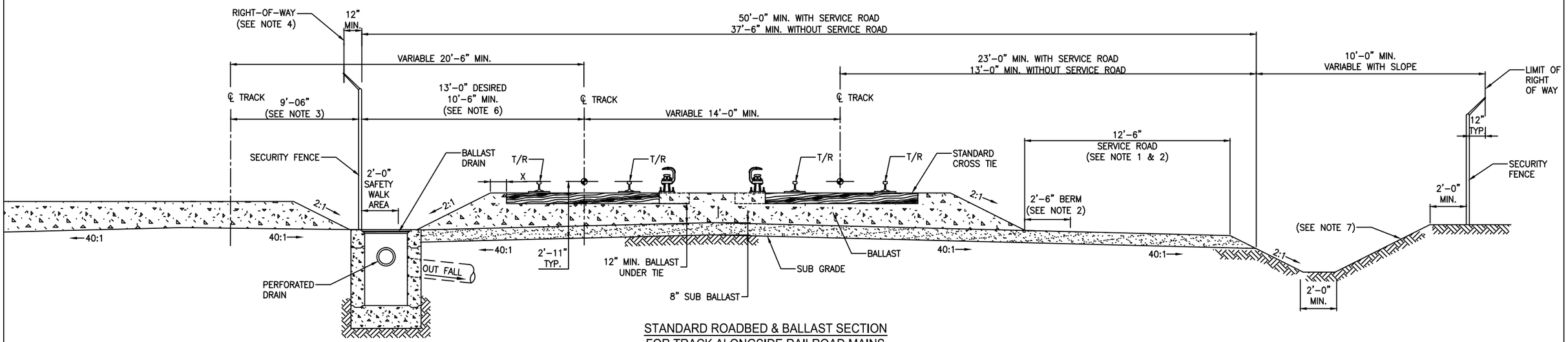

STANDARD ROADBED & BALLAST SECTION
FOR TRACK ALONGSIDE RAILROAD MAINS

TYPE OF TIE AT THE RECOMMENDED SPACING	WIDTH OF BALLAST SHOULDER (X)
7"x 9" x 8'-6" WOOD	10"
MONOBLOCK CONCRETE TIES	12"

NOTES:

1. THE SERVICE ROAD AS SHOWN IS DESIRABLE BUT NOT MANDATORY. FURTHERMORE, IT NEED NOT BE CONTINUOUS NOR ON THE SAME SIDE OF TRACKS. THE FEASIBILITY OF A SERVICE ROAD SHALL BE EVALUATED IN EACH LOCATION FOR THE AUTHORITY'S CONSIDERATION.
2. WHERE THERE IS NO SERVICE ROAD ON EITHER SIDE THE SUB BALLAST SHOULDER BERM SHALL BE 2'-6" ON BOTH SIDES OF TRACK.
3. RECOMMENDED WHERE ALL ALIGNMENT DOES NOT EXCEED 2° CURVATURE; LATEST SPECIFICATIONS OF THE RAILROAD INVOLVED SHALL GOVERN.
4. ALLOWANCE FOR THREE (3) STRAND BARBED WIRE ON FENCE AT 45 DEGREE ANGLE FENCE IS 12".
5. WHEN EXISTING ROADBED IS DISTURBED OR RELOCATED, THE TRACK AND BALLAST SECTION SHALL CONFORM TO LATEST SPECIFICATIONS AND STANDARDS OF THE RAILROAD SECTION INVOLVED.
6. MIN. LATERAL CLEARANCE TO FENCE SHALL BE 13'-0" ON OUTSIDE OF CURVE WHEN TRACK SUPER ELEVATION EXCEEDS 3 3/4"
7. SLOPE TO BE DEPENDENT ON THE REQUIREMENTS FOR EACH LOCATION.

*8. WHERE FEASIBLE FOLLOW COMMON CORRIDOR STUDY RECOMMENDATIONS FOR 5 FEET VERTICAL OFFSET AND 50 FEET HORIZONTAL SEPARATION BETWEEN CENTERLINE OF THE RAILROAD CORRIDORS. WMATA INTRUSION DETECTION WARNING SYSTEM (IDW) IS REQUIRED IN ALL RAILROAD COMMON CORRIDORS FOR ALL WMATA TRACKS THAT PARALLEL A RAILROAD CORRIDOR. A CRASH WALL DESIGN MUST BE CONSIDERED WHERE A 5 FEET VERTICAL AND 50 FEET HORIZONTAL OFFSET CANNOT BE OBTAINED FOR EXISTING OVERHEAD STRUCTURES (EG. EXISTING HIGHWAY BRIDGE STRUCTURES, ETC).

"PROFESSIONAL CERTIFICATION: I HEREBY CERTIFY THAT THESE DOCUMENTS WERE PREPARED OR APPROVED BY ME, AND THAT I AM A DULY LICENSED ARCHITECT UNDER THE LAWS OF THE DISTRICT OF COLUMBIA."

LICENSE No. _____

EXPIRATION DATE: _____

- DC REGISTER SECTION 3413

DESIGNED	K. WOJCICKI	06/07 DATE
DRAWN	K. WOJCICKI	06/07 DATE
CHECKED	RAVI AMIN	01/15 DATE

REFERENCE DRAWINGS

NUMBER	TITLE

REVISIONS

DATE	NUM	DESCRIPTION
01/15	01	Revised Title Block and Changed DD to read ST

WASHINGTON METROPOLITAN AREA TRANSIT AUTHORITY

DEPARTMENT OF TRANSIT INFRASTRUCTURE AND ENGINEERING SERVICES
CENI - TRACK STRUCTURES & FACILITIES

REVISION SUBMITTED _____ DATE

APPROVED _____ DATE
THOMAS ROBINSON
DEPUTY CHIEF ENGINEER

TRACKWORK STANDARD DRAWING
STANDARD ROADBED & BALLAST SECTION
METRO IN RAILROAD CORRIDOR
.

CONTRACT NO.	SCALE	DRAWING NO.	SHEET NO.
FQ-	NOT TO SCALE	ST-TW-111	## of .

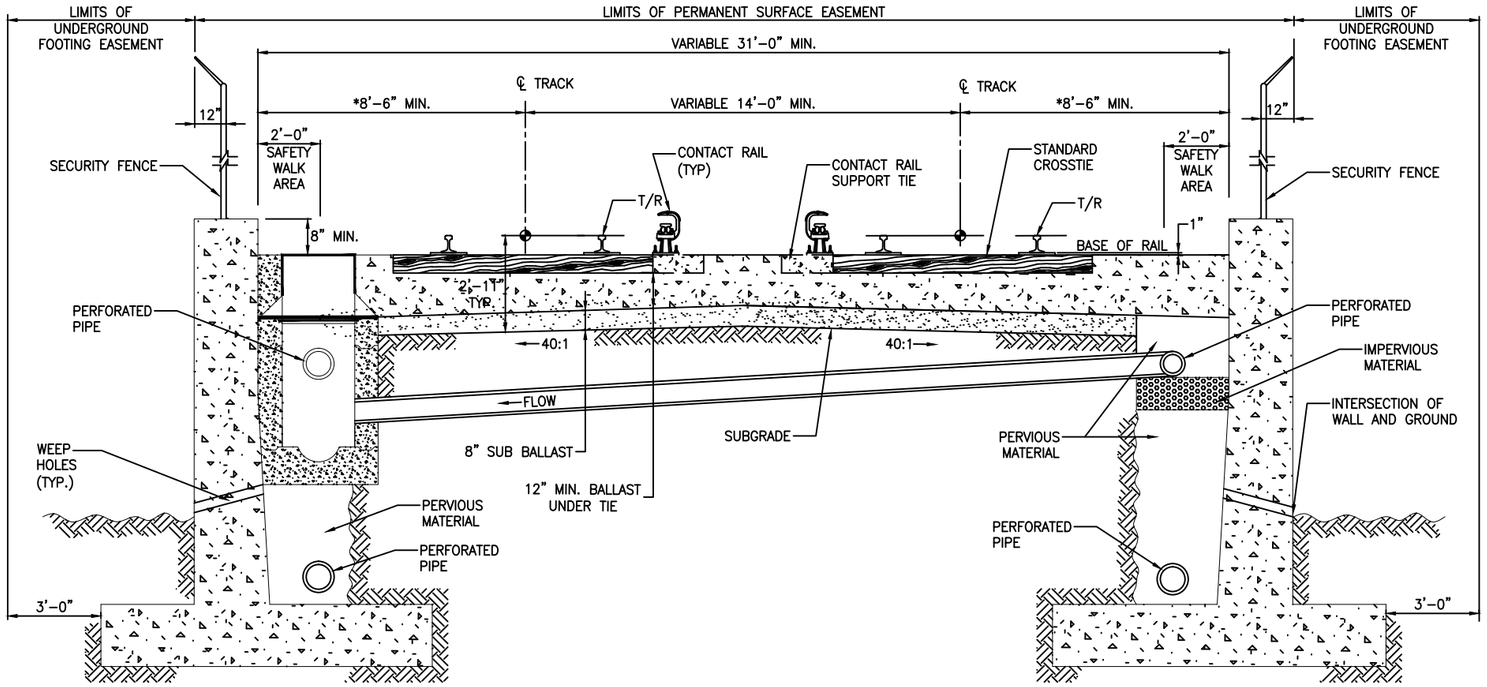

STANDARD ROADBED & BALLAST
SECTION IN RETAINED FILL

NOTES:

1. RETAINING WALL FORM AND DETAILS COVERED ELSEWHERE. LIMITS OF UNDERGROUND FOOTING EASEMENT.
2. APPLICABLE DIMENSIONS SHOWN ON THIS DRAWING SHALL ALSO GOVERN FOR TRACK ADJACENT TO A SINGLE RETAINING WALL OR FOR A SINGLE METRO TRACK IN RETAINING CUT OR FILL LOCATION.
3. PROVIDE INLET MANHOLES IN ACCORDINANCE WITH DD-M-23.
4. REFER TO DETAIL 8 ON ST-C-34 FOR MOUNTING WMATA'S SECURITY FENCE ON THE RETAINING WALL.
5. BOTH 14'-0" MIN. TRACK CENTERS AND 8'-6" MIN. SIDE CLEARANCE SHALL BE INCREASE FOR CURVATURE AND SUPERELEVATION AS PER WMATA'S MANUAL OF DESIGN CRITERIA.

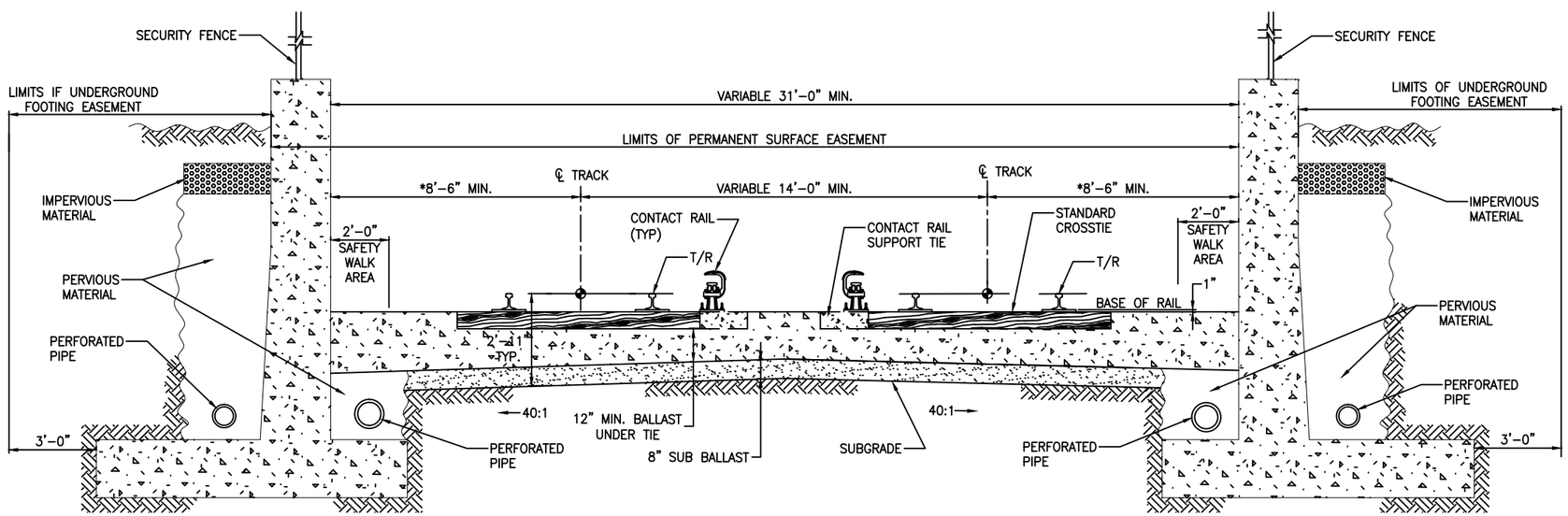

STANDARD ROADBED & BALLAST
SECTION IN RETAINED CUT

*ALLOWANCE FOR CURVATURE AND SUPER ELEVATION SHALL BE ADDED WHERE APPLICABLE

"PROFESSIONAL CERTIFICATION: I HEREBY CERTIFY THAT THESE DOCUMENTS WERE PREPARED OR APPROVED BY ME, AND THAT I AM A DULY LICENSED ARCHITECT UNDER THE LAWS OF THE DISTRICT OF COLUMBIA."

LICENSE No. _____.

EXPIRATION DATE: _____.

- DC REGISTER SECTION 3413

DESIGNED	K. WOJCICKI	06/07 DATE
DRAWN	K. WOJCICKI	06/07 DATE
CHECKED	RAVI AMIN	01/15 DATE

REFERENCE DRAWINGS

NUMBER	TITLE

REVISIONS

DATE	NUM	DESCRIPTION
01/15	01	Revised Title Block and Changed DD to read ST

WASHINGTON METROPOLITAN AREA TRANSIT AUTHORITY

DEPARTMENT OF TRANSIT INFRASTRUCTURE AND ENGINEERING SERVICES
CENI - TRACK STRUCTURES & FACILITIES

REVISION SUBMITTED _____ DATE

APPROVED _____ DATE
THOMAS ROBINSON
DEPUTY CHIEF ENGINEER

TRACKWORK STANDARD DRAWING
STANDARD ROADBED & BALLAST SECTION
METRO IN RETAINNG WALL SECTION
.

CONTRACT NO.	SCALE	DRAWING NO.	SHEET NO.
FQ-	NOT TO SCALE	ST-TW-114	## of .

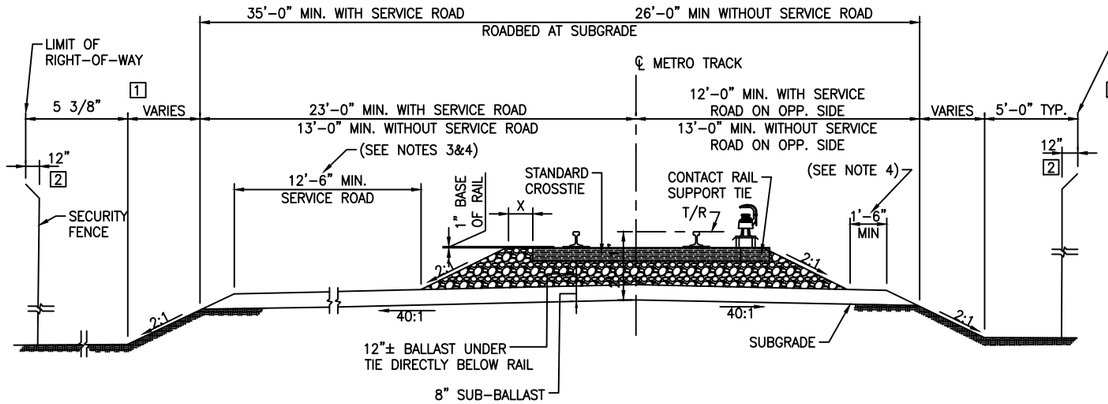

STANDARD ROADBED & BALLAST SECTION
FOR TANGENT SINGLE TRACK

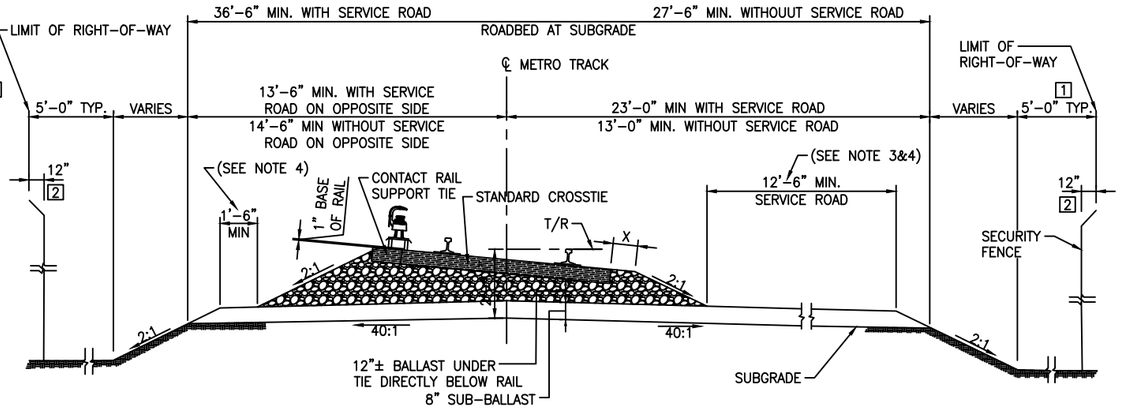

STANDARD ROADBED & BALLAST SECTION
FOR SUPERELEVALTED SINGLE TRACK

TYPE OF TIE AT THE RECOMMENDED SPACING	WIDTH OF BALLAST SHOULDER
7"X9"X8'-6" WOOD	10"
CONCRETE TIES	12"

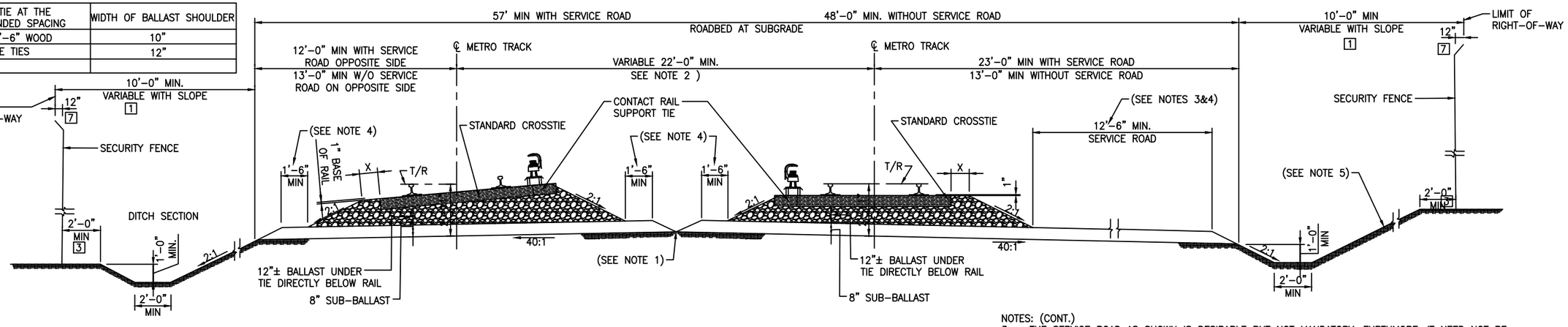

STANDARD ROADBED & BALLAST SECTION
FOR DIVERGING TRACKS

NOTES:

1. THE CROWN OF THE SUBGRADE UNDER DIVERGING TRACKS SHALL BE AT THE ℄ BETWEEN TRACKS UNTIL THE TOE OF SLOPE OF THE SUB-BALLAST UNDER ONE TRACK INTERSECTS THE TOE OF SLOPE OF THE SUB-BALLAST UNDER THE OTHER TRACK AT THE TOP OF THE SUBGRADE; BEYOND WHICH THE SUBGRADE SHALL BE CONSTRUCTED AS TWO SINGLE TRACKS. THE INTERTRACK DITCH SHALL BEGIN AT THE POINT WHERE SINGLE TRACK SUBGRADES BEGIN AND SHALL ATTAIN MINIMUM DIMENSIONS AS THE TRACKS DIVERGE.

2. THE LEVEL BALLAST BETWEEN TRACKS ON 14' CENTERS SHALL DECREASE UNIFORMLY TO THE RECOMMENDED BALLAST SHOULDER WIDTH AT THE POINT WHERE SINGLE TRACK CONSTRUCTION BEGINS.

NOTES: (CONT.)

3. THE SERVICE ROAD AS SHOWN IS DESIRABLE BUT NOT MANDATORY. FURTHMORE, IT NEED NOT BE CONTINUOUS NOR ALWAYS ON THE SAME SIDE OF TRACKS. THE FEASIBILITY OF PROVIDING THE ROAD SHALL BE EVALUATED IN EACH LOCATION FOR THE AUTHORITY'S CONSIDERATION.

4. WHERE THERE IS NO SERVICE ROAD ON EITHER SIDE, THE SUB-BALLAST BERM SHALL BE 2'6" ON BOTH SIDES OF TRACK.

5. SLOPE TO BE DEPENDENT ON THE REQUIREMENTS OF EACH LOCATION

6. THE TRANSITION FROM THE ROADBED AND BALLAST SECTION SHOWN FOR TANGENT TRACK TO THE ROADBED AND BALLAST SECTION SHOWN FOR SUPERELEVATED TRACK MAY BE MADE THROUGH THE LENGTH OF THE SPIRAL

7. ALLOWANCE FOR THREE (3) STRANDED BARBED WIRE ON FENCE AT 45 DEGREE ANGLE IS 12"

"PROFESSIONAL CERTIFICATION: I HEREBY CERTIFY THAT THESE DOCUMENTS WERE PREPARED OR APPROVED BY ME, AND THAT I AM A DULY LICENSED ARCHITECT UNDER THE LAWS OF THE DISTRICT OF COLUMBIA."

LICENSE No. _____

EXPIRATION DATE: _____

- DC REGISTER SECTION 3413

DESIGNED	SHAROOD	08/18/70 DATE
DRAWN	WESTRA	08/18/70 DATE
CHECKED	RAVI AMIN	01/15 DATE

REFERENCE DRAWINGS

NUMBER	TITLE

REVISIONS

DATE	NUM	DESCRIPTION
01/15	01	Revised Title Block and Changed DD to read ST

WASHINGTON METROPOLITAN AREA TRANSIT AUTHORITY

DEPARTMENT OF TRANSIT INFRASTRUCTURE AND ENGINEERING SERVICES
CENI - TRACK STRUCTURES & FACILITIES

REVISION SUBMITTED _____ DATE

APPROVED _____ DATE
JHOMAS ROBINSON
DEPUTY CHIEF ENGINEER

TRACKWORK STANDARD DRAWING
STANDARD ROADBED & BALLAST SECTIONS
METRO SINGLE AND DIVERGING TRACKS
.

CONTRACT NO.	SCALE	DRAWING NO.	SHEET NO.
FQ-	NOT TO SCALE	ST-TW-116	## of .

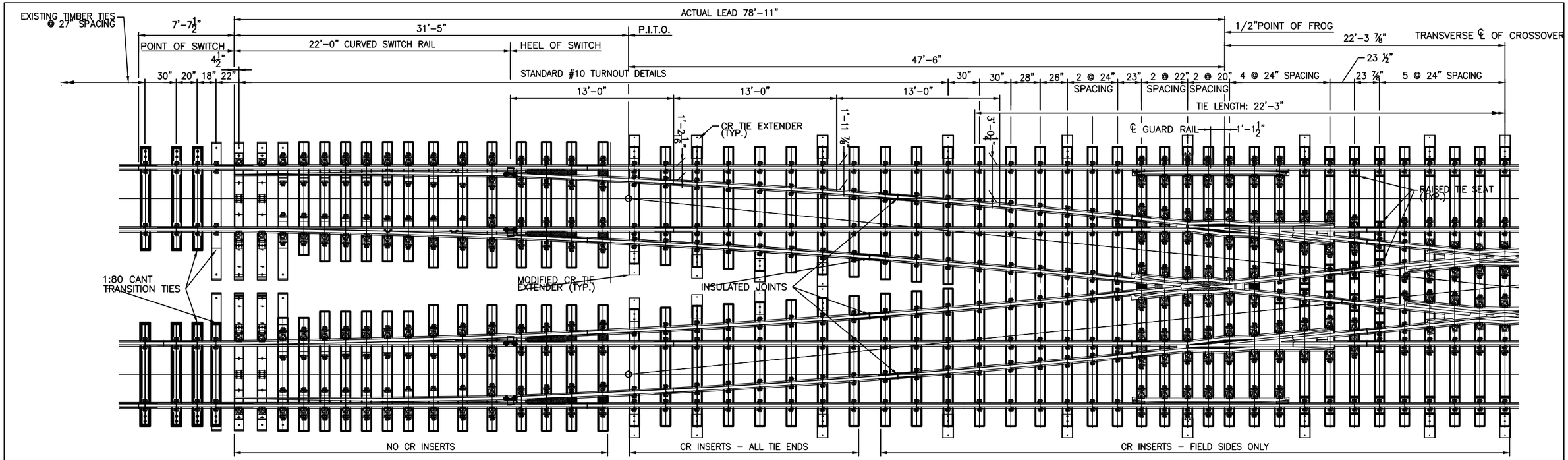

PLAN - NO.10 DOUBLE CROSSOVER BALLASTED, 14' TRACK CENTERS

1/4"=1'-0"

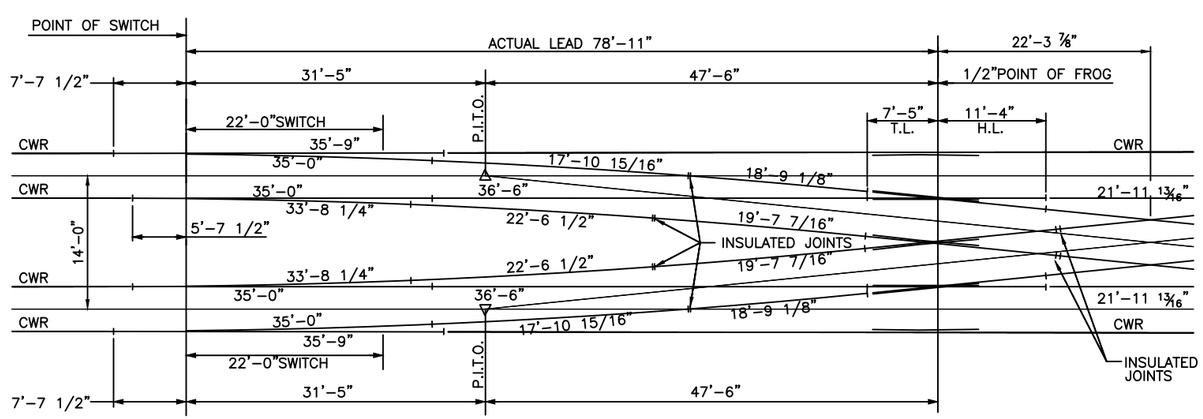

NO.10 TURNOUT RAIL LAYOUT DIAGRAM

SCALE: 1/8"=1'-0"

TURNOUT DATA

FROG		NUMBER	10
		ANGLE	5°-43'-29"
		TOE LENGTH	7'-5"
		HEEL LENGTH	11'-4"
		TOTAL LENGTH	18'-9"
		TOE SPREAD	8 3/8"
		HEEL SPREAD	14 1/8"
SWITCH		LENGTH OF SWITCH RAIL	22'-0"
		HEEL SPREAD	6 3/4"
		HEEL ANGLE	2°-14'-12"
	CURVED POINT	THICKNESS AT POINT	0"
		ANGLE AT POINT	0°-41'-23"
		RADIUS	815.19'
		VERTEX DISTANCE	0"
	STRAIGHT POINT	THICKNESS AT POINT	0"
		ANGLE AT POINT	0°-41'-23"
		RADIUS	810.48'
		VERTEX DISTANCE	0"
ACTUAL LEAD			78'-11"
STRAIGHT CLOSURE RAIL DISTANCE			36'-6"
CURVED CLOSURE RAIL DISTANCE			36'-7 5/8"
TURNOUT CURVE		CENTER LINE RADIUS	812.84'
		DEGREE OF CURVE	7°-04'-00"
		CENTRAL ANGLE	3°-29'-17"
TANGENT ADJACENT TOE OF FROG			0"

BILL OF MATERIAL

QTY	DESCRIPTION
4	NO. 10 SWITCH – BALLASTED TRACK, COMPLETE PER DWG. ST-TW-044 AND MODIFIED AS SHOWN
4	NO.10 FROG – BALLASTED TRACK, COMPLETE
4	12'-6" GUARD RAILS COMPLETE
1	11° 26' 58" DIAMOND CROSSING COMPLETE
A.R.	BONDED STANDARD RAIL JOINTS COMPLETE
12	BONDED INSULATED RAIL JOINTS COMPLETE
8	11' MAINLINE CONCRETE SWITCH MACHINE TIES
A.R.	CONCRETE TURNOUT TIES
8	1:80 CANT TRANSITION TIES

"PROFESSIONAL CERTIFICATION: I HEREBY CERTIFY THAT THESE DOCUMENTS WERE PREPARED OR APPROVED BY ME, AND THAT I AM A DULY LICENSED ARCHITECT UNDER THE LAWS OF THE DISTRICT OF COLUMBIA."

LICENSE No. _____.

EXPIRATION DATE: _____.

- DC REGISTER SECTION 3413

DESIGNED	A. KEFFLER	04/29/09 DATE
DRAWN	D. ROUSE	04/29-09 DATE
CHECKED	RAVI AMIN	01/15 DATE

REFERENCE DRAWINGS

NUMBER	TITLE

REVISIONS

DATE	NUM	DESCRIPTION

WASHINGTON METROPOLITAN AREA TRANSIT AUTHORITY

DEPARTMENT OF TRANSIT INFRASTRUCTURE AND ENGINEERING SERVICES
CENI - TRACK STRUCTURES & FACILITIES

REVISION SUBMITTED _____ DATE

APPROVED _____ DATE
THOMAS ROBINSON
DEPUTY CHIEF ENGINEER

TRACKWORK STANDARD DRAWING
NO. 10 DOUBLE CROSSOVER
BALLASTED, 14'-0" TRACK CENTERS
CONCRETE SWITCH TIES

CONTRACT NO.	SCALE	DRAWING NO.	SHEET NO.
FQ-	AS SHOWN	ST-TW-128	## of .

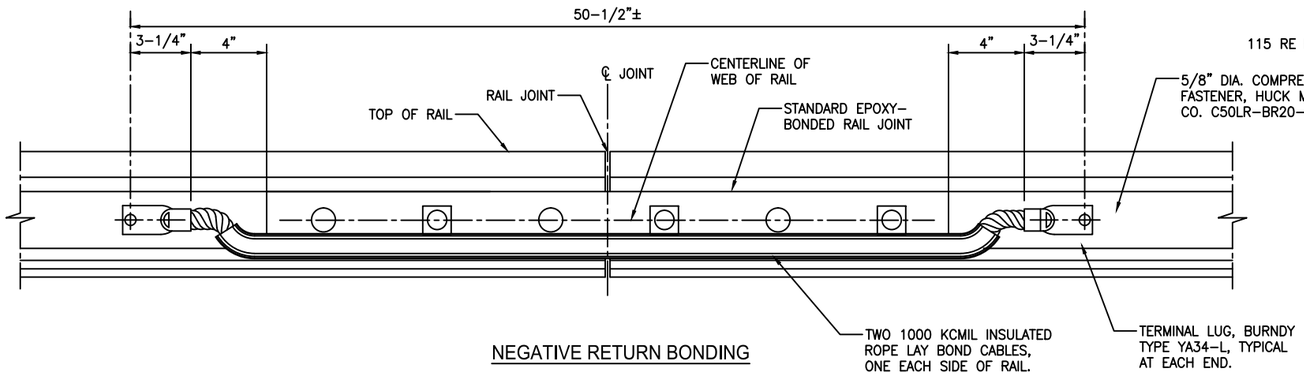

NEGATIVE RETURN BONDING

NOTE:
THE DIRECT FIXATION FASTENER SHALL BE INSTALLED IN SUCH A MANNER THAT THE RAIL CLAMP DOES NOT MAKE DIRECT CONTACT WITH ANY PART OF THE BONDED INSULATED JOINT ASSEMBLY.

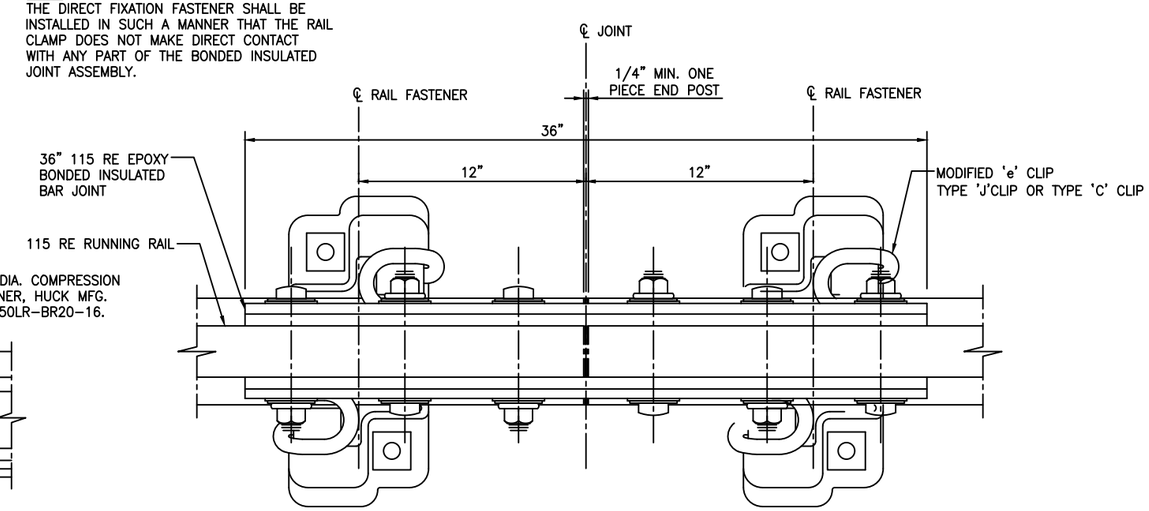

DETAIL OF FASTENER LOCATION, INSULATED JOINT

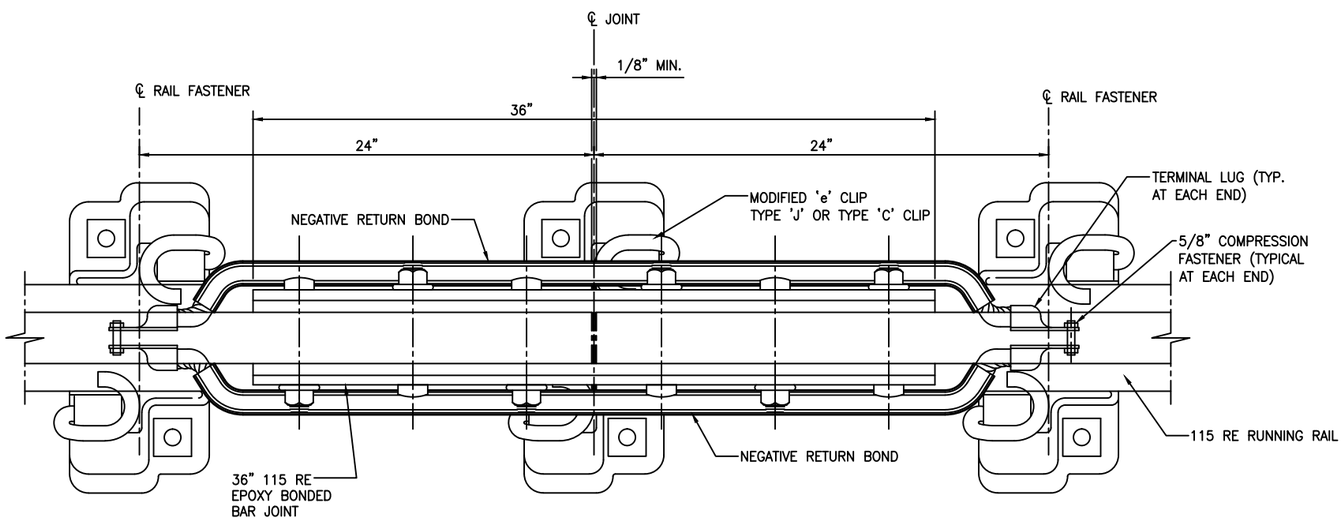

DETAIL OF NEGATIVE RETURN BONDS, FASTENER LOCATION, STANDARD JOINT

REINFORCING NOTES:

A. LONGITUDINAL WIRES TO BE CUT 1" INSIDE ENDS OF GROUT PAD.

B. TRANSVERSE WIRES TO BE CUT FLUSH WITH OUTSIDE LONGITUDINAL WIRE. C.

C. ONE TRANSVERSE WIRE IS TO BE LOCATED OVER THE TRANSVERSE CENTERLINE OF THE FASTENER TO MINIMIZE INTERFERENCE WITH ANCHOR BOLT HOLES.

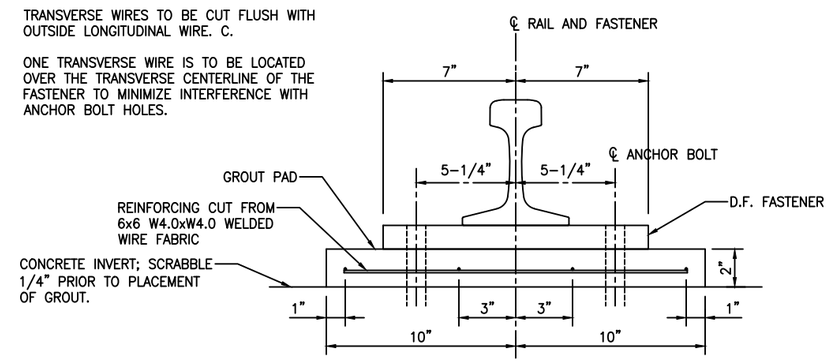

GROUT PAD REINFORCING

"PROFESSIONAL CERTIFICATION: I HEREBY CERTIFY THAT THESE DOCUMENTS WERE PREPARED OR APPROVED BY ME, AND THAT I AM A DULY LICENSED ARCHITECT UNDER THE LAWS OF THE DISTRICT OF COLUMBIA."

LICENSE No. _____

EXPIRATION DATE: _____

- DC REGISTER SECTION 3413

DESIGNED	S. HICKS	01/95 DATE
DRAWN	A. DAVIS	05/06 DATE
CHECKED	RAVI AMIN	01/15 DATE

REFERENCE DRAWINGS

NUMBER	TITLE

REVISIONS

DATE	NUM	DESCRIPTION
06/06	01	Minor Revision
12/06	02	Minor Revision

WASHINGTON METROPOLITAN AREA TRANSIT AUTHORITY

DEPARTMENT OF TRANSIT INFRASTRUCTURE AND ENGINEERING SERVICES
CENI - TRACK STRUCTURES & FACILITIES

REVISION SUBMITTED _____ DATE

APPROVED _____ DATE
THOMAS ROBINSON
DEPUTY CHIEF ENGINEER

TRACKWORK STANDARD DRAWING
MISCELLANEOUS RAIL JOINT & GROUT PAD
REINFORMENT DETAILS

CONTRACT NO.	SCALE	DRAWING NO.	SHEET NO.
FQ-	3" = 1'-0"	ST-TW-133	## of .

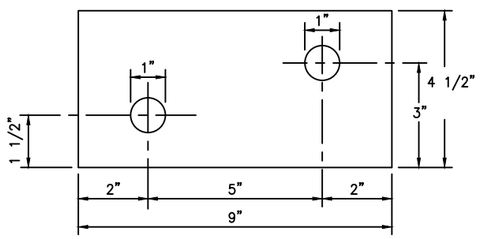

BALLASTED
COVER PLATE
4 1/2"x1/2"x9"

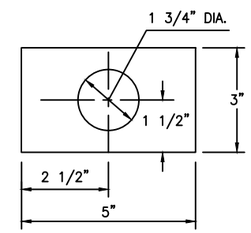

DIRECT FIXATION
COVER PLATE
3"x1/2"x5"

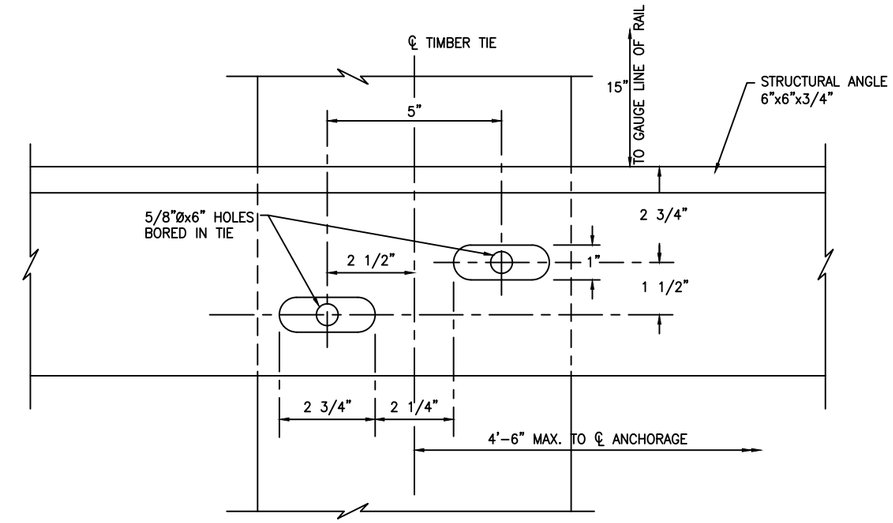

DETAIL
BALLASTED TRACK-TIMBER TIES

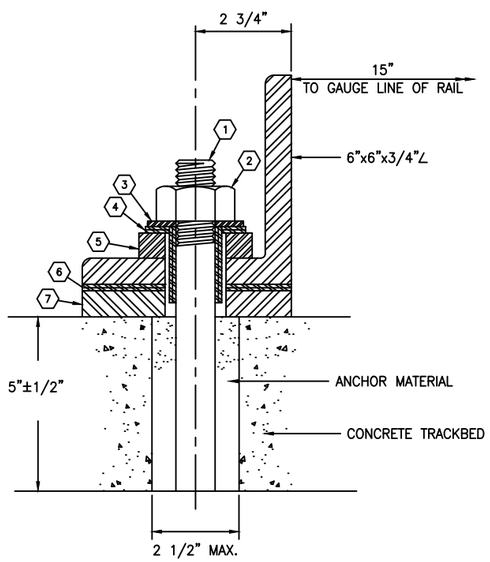

DIRECT FIXATION
TRACK-ANCHORAGE ASSEMBLY

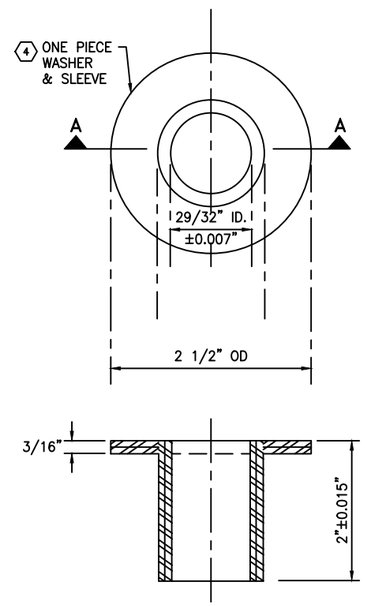

SECTION A-A - ONE PIECE
FIBER WASHER & SLEEVE ASSEMBLY 4

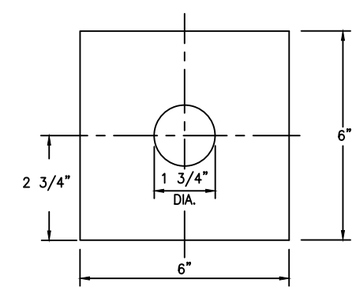

FIBER INSULATING PAD 7
6"x6"x3/16"

BASE PLATE 8
6"x6"x3/4"

BALLASTED TRACK–TIMBER TIE ANCHORAGE–EACH

QTY	BILL OF MATERIAL DESCRIPTION
2	3/4" X 7" ø SCREW SPIKE
1	COVER PLATE, 4 1/2"x 1/2"x 9", ASTM–A36

DIRECT FIXATION TRACK–ANCHORAGE–EACH

ITEM NO.	QTY	BILL OF MATERIAL DESCRIPTION
1	1	ANCHOR BOLT 1 1/8" ø x 9 1/2" ASTM–A449
2	1	NUT FOR 1 1/8" ø BOLT ASTM–A325
3	1	WASHER 1 1/4" ID x 2 3/4" OD x 5/32" THICK ASTM–A325
4	1	ONE PIECE–INSULATING FIBER WASHER(29/32" ID, 2 1/2" OD) AND INSULATING FIBER SLEEVE (29/32" ID, 1 9/32" OD)
5	1	COVER PLATE 3" x 5" x 1/2" ASTM–A36
6	1	FIBER INSULATING PAD 6" x 6" x 3/16"
7	1	BASE PLATE 6" x 6" x 3/4" ASTM–A36

"PROFESSIONAL CERTIFICATION: I HEREBY CERTIFY THAT THESE DOCUMENTS WERE PREPARED OR APPROVED BY ME, AND THAT I AM A DULY LICENSED ARCHITECT UNDER THE LAWS OF THE DISTRICT OF COLUMBIA."

LICENSE No. _____.

EXPIRATION DATE: _____.

- DC REGISTER SECTION 3413

DESIGNED	DCCO	09/93 DATE
DRAWN	A. DAVIS	05/06 DATE
CHECKED	RAVI AMIN	01/15 DATE

REFERENCE DRAWINGS

NUMBER	TITLE

REVISIONS

DATE	NUM	DESCRIPTION
05/06	01	Detail Title Revised
11/06	02	Revised Sleeve Assembly to One Piece per TSSM
01/15	03	Revised Title Block and Changed 005 to read 134

WASHINGTON METROPOLITAN AREA TRANSIT AUTHORITY

DEPARTMENT OF TRANSIT INFRASTRUCTURE AND ENGINEERING SERVICES
CENI - TRACK STRUCTURES & FACILITIES

REVISION SUBMITTED _____ DATE

APPROVED _____ DATE
THOMAS ROBINSON
DEPUTY CHIEF ENGINEER

TRACKWORK STANDARD DRAWING
EMERGENCY GUARD RAIL DETAILS

CONTRACT NO.	SCALE	DRAWING NO.	SHEET NO.
FQ-	NOT TO SCALE	ST-TW-134	## of .

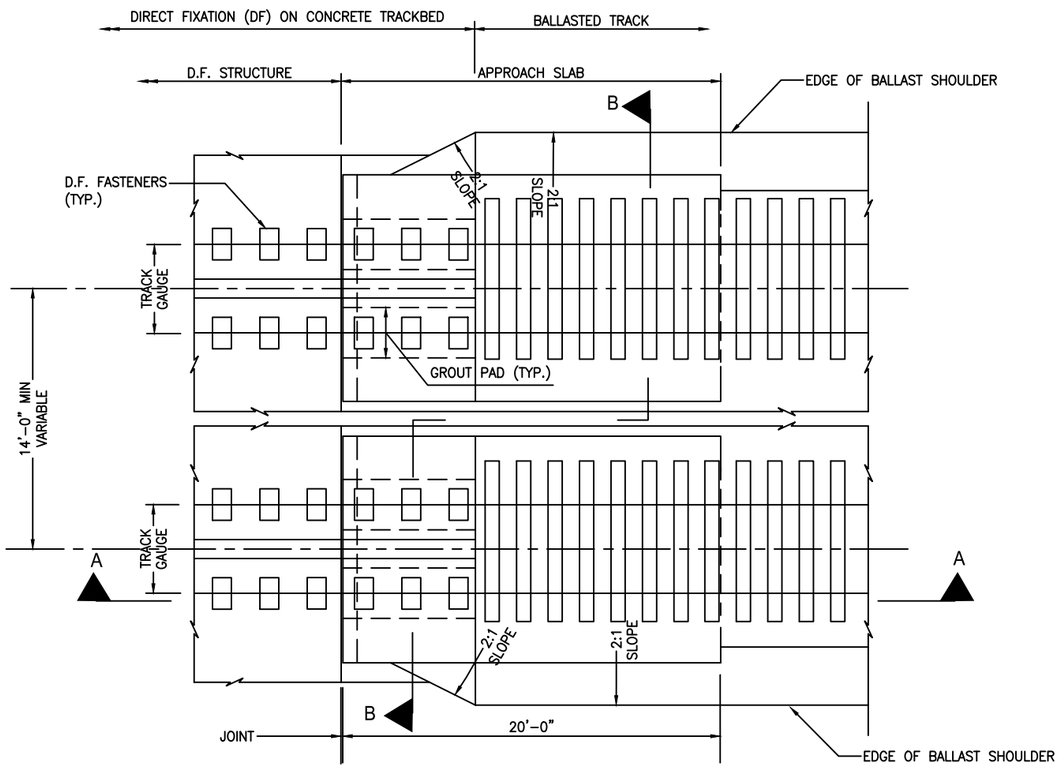

PLAN

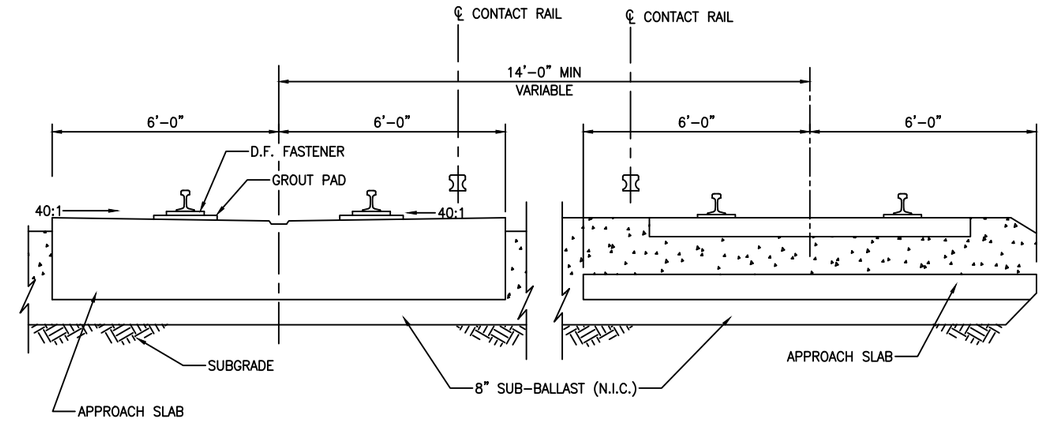

SECTION B-B

NOTES:

1. APPROACH SLABS ARE CONSTRUCTED ON THE INBOUND AND OUTBOUND TRACK AT ALL TRANSITIONS FROM DIRECT FIXATION TO BALLASTED TRACK.
2. ADJUST TRACK FASTENER POSITIONS TO FIT BACKWALL SKEW AND APPROACH SLAB LENGTH VARIATIONS.

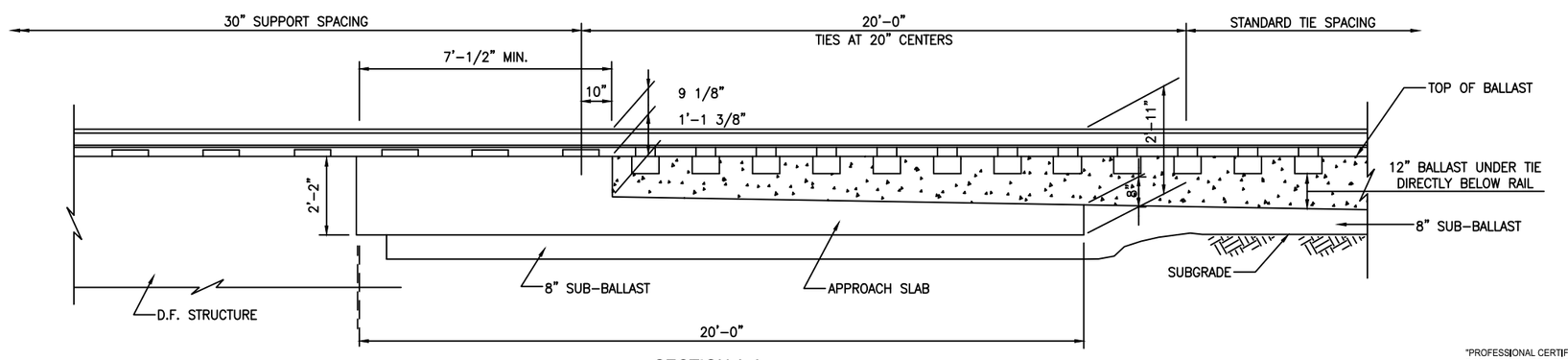

SECTION A-A

"PROFESSIONAL CERTIFICATION: I HEREBY CERTIFY THAT THESE DOCUMENTS WERE PREPARED OR APPROVED BY ME, AND THAT I AM A DULY LICENSED ARCHITECT UNDER THE LAWS OF THE DISTRICT OF COLUMBIA."

LICENSE No. _____

EXPIRATION DATE: _____

- DC REGISTER SECTION 3413

DESIGNED	DCCO	06/87 DATE
DRAWN	A. DAVIS	05/06 DATE
CHECKED	RAVI AMIN	01/15 DATE

REFERENCE DRAWINGS

NUMBER	TITLE

REVISIONS

DATE	NUM	DESCRIPTION
05/06	01	Detail Title Revision
01/15	02	Revised Title Block and Changed 006 to read 135

WASHINGTON METROPOLITAN AREA TRANSIT AUTHORITY

DEPARTMENT OF TRANSIT INFRASTRUCTURE AND ENGINEERING SERVICES
CENI - TRACK STRUCTURES & FACILITIES

REVISION SUBMITTED _____ DATE

APPROVED _____ DATE
THOMAS ROBINSON
DEPUTY CHIEF ENGINEER

TRACKWORK STANDARD DRAWING
APPROACH SLAB
DIRECT FIXATION / BALLASTED TRACK
.

CONTRACT NO.	SCALE	DRAWING NO.	SHEET NO.
FQ-	NOT TO SCALE	ST-TW-135	## of .

BILL OF MATERIAL

ITEM	QTY	DESCRIPTION
1	LOT	TYPE A PROTECTION COVER ASSEMBLY (SEE NOTE)
2	LOT	COMPOSITE RAIL
3	1	FIBERGLASS INSULATOR (TYP. SEE NOTE 2)
4	2	THREADED STUD 1/2"ø, GALVANIZED STEEL, LENGTH AS REQUIRED
5	2	HEX NUT, HD., 1/2"ø, GALVANIZED STEEL
6	2	LOCKWASHER, 1/2"ø, GALVANIZED STEEL
7	2	FLAT WASHER, 1/2"ø, GALVANIZED STEEL
8	AR	INSERT ANCHORING MATERIAL
9	AR	NON SHRINK GROUT PAD, HEIGHT AS REQUIRED

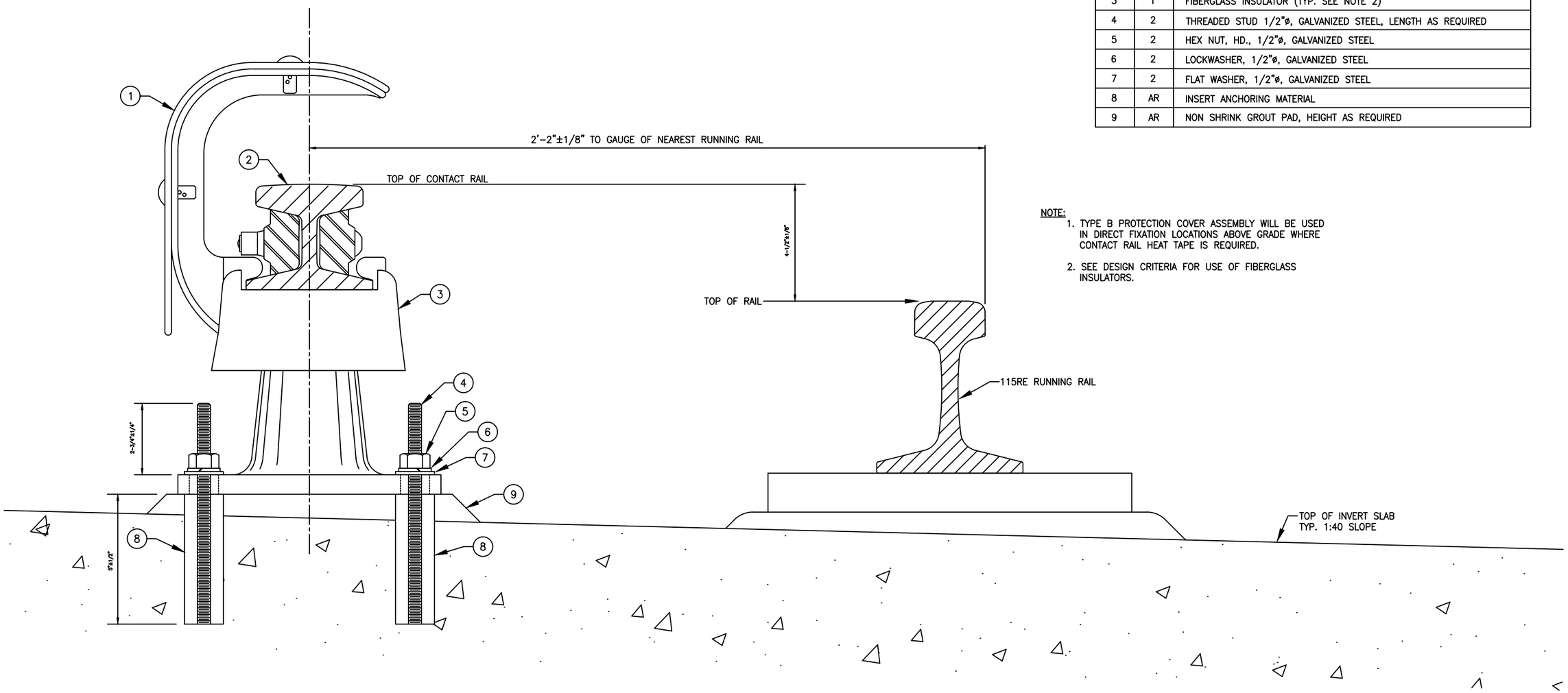

NOTE:

1. TYPE B PROTECTION COVER ASSEMBLY WILL BE USED IN DIRECT FIXATION LOCATIONS ABOVE GRADE WHERE CONTACT RAIL HEAT TAPE IS REQUIRED.
2. SEE DESIGN CRITERIA FOR USE OF FIBERGLASS INSULATORS.

CONTACT RAIL MOUNTING ARRANGEMENT FOR DIRECT FIXATION

"PROFESSIONAL CERTIFICATION: I HEREBY CERTIFY THAT THESE DOCUMENTS WERE PREPARED OR APPROVED BY ME, AND THAT I AM A DULY LICENSED ARCHITECT UNDER THE LAWS OF THE DISTRICT OF COLUMBIA."

LICENSE No. _____

EXPIRATION DATE: _____

- DC REGISTER SECTION 3413

DESIGNED	W. TINKHAM	06/98 DATE
DRAWN	A. DAVIS	08/06 DATE
CHECKED	RAVI AMIN	01/15 DATE

REFERENCE DRAWINGS

NUMBER	TITLE

REVISIONS

DATE	NUM	DESCRIPTION
06/07	01	Updated to Umbrella Insulator Base
01/15	02	Revised Title Block

WASHINGTON METROPOLITAN AREA TRANSIT AUTHORITY

DEPARTMENT OF TRANSIT INFRASTRUCTURE AND ENGINEERING SERVICES
CENI - TRACK STRUCTURES & FACILITIES

REVISION SUBMITTED _____ DATE

APPROVED _____ DATE
THOMAS ROBINSON
DEPUTY CHIEF ENGINEER

CONTACT RAIL STANDARD DRAWING
COMPOSITE RAIL
ASSEMBLY - DIRECT FIXATION
.

CONTRACT NO.	SCALE	DRAWING NO.	SHEET NO.
FQ-	1/2" = 1'-0"	ST-TW-CR-001	## of .

BILL OF MATERIAL		
ITEM. NO.	QTY	
1	LOT	TYPE B PROTECTION COVER ASSEMBLY
2	LOT	COMPOSITE RAIL
3	1	FIBERGLASS INSULATOR (TYP.–SEE NOTE 1)
4	2	TIMBER DRIVE OR SCREW SPIKE 1/2" DIA. x 6 1/2" LG. GALVANIZED STEEL

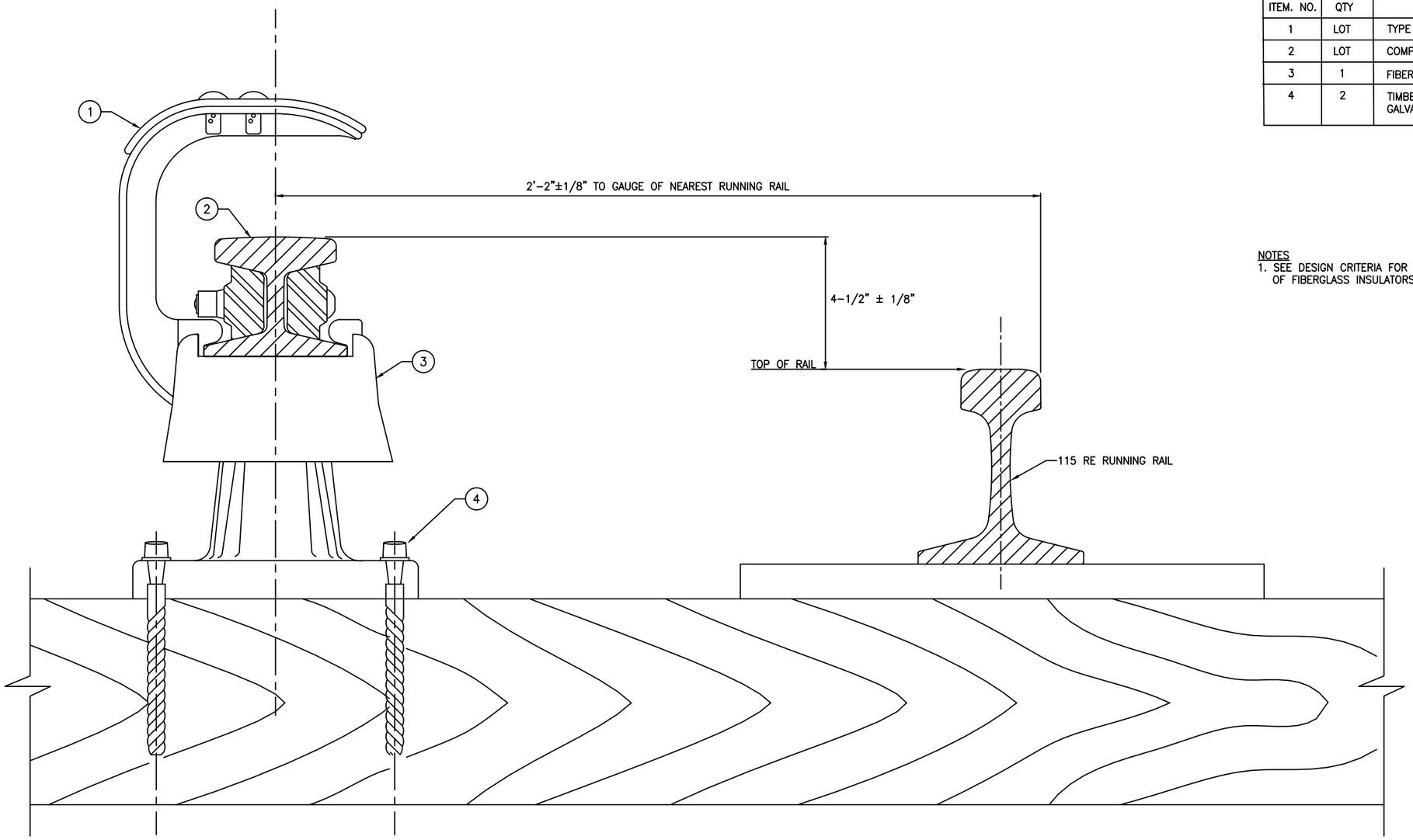

NOTES
1. SEE DESIGN CRITERIA FOR USE OF FIBERGLASS INSULATORS.

CONTACT RAIL MOUNTING
ARRANGEMENT FOR BALLASTED TRACKS

"PROFESSIONAL CERTIFICATION: I HEREBY CERTIFY THAT THESE DOCUMENTS WERE PREPARED OR APPROVED BY ME, AND THAT I AM A DULY LICENSED ARCHITECT UNDER THE LAWS OF THE DISTRICT OF COLUMBIA."

LICENSE No. _____.

EXPIRATION DATE: _____.

- DC REGISTER SECTION 3413

DESIGNED	S. HICKS	06/98 DATE
DRAWN	A. DAVIS	08/06 DATE
CHECKED	RAVI AMIN	01/15 DATE

REFERENCE DRAWINGS

NUMBER	TITLE

REVISIONS

DATE	NUM	DESCRIPTION
06/07	01	Updated to Plastic Umbrella Insulator Base
01/15	02	Revised Title Block and Changed DD to read ST

WASHINGTON METROPOLITAN AREA TRANSIT AUTHORITY

DEPARTMENT OF TRANSIT INFRASTRUCTURE AND ENGINEERING SERVICES
CENI - TRACK STRUCTURES & FACILITIES

REVISION SUBMITTED _____ DATE

APPROVED _____ DATE
THOMAS ROBINSON
DEPUTY CHIEF ENGINEER

CONTACT RAIL STANDARD DRAWING
COMPOSITE RAIL
ASSEMBLY - BALLASTED TRACK
.

CONTRACT NO.	SCALE	DRAWING NO.	SHEET NO.
FQ-	1/2" = 1'-0"	ST-TW-CR-002	## of .

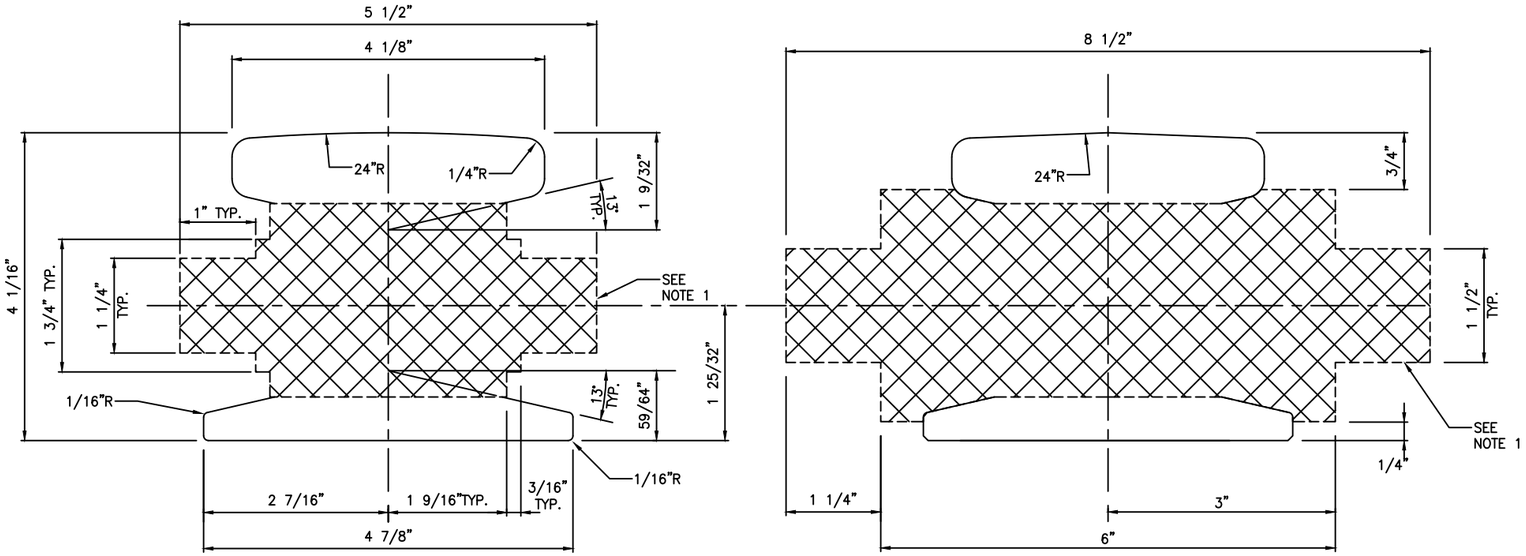

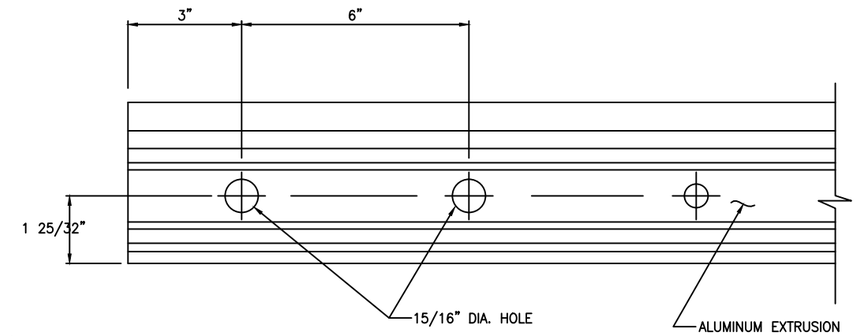

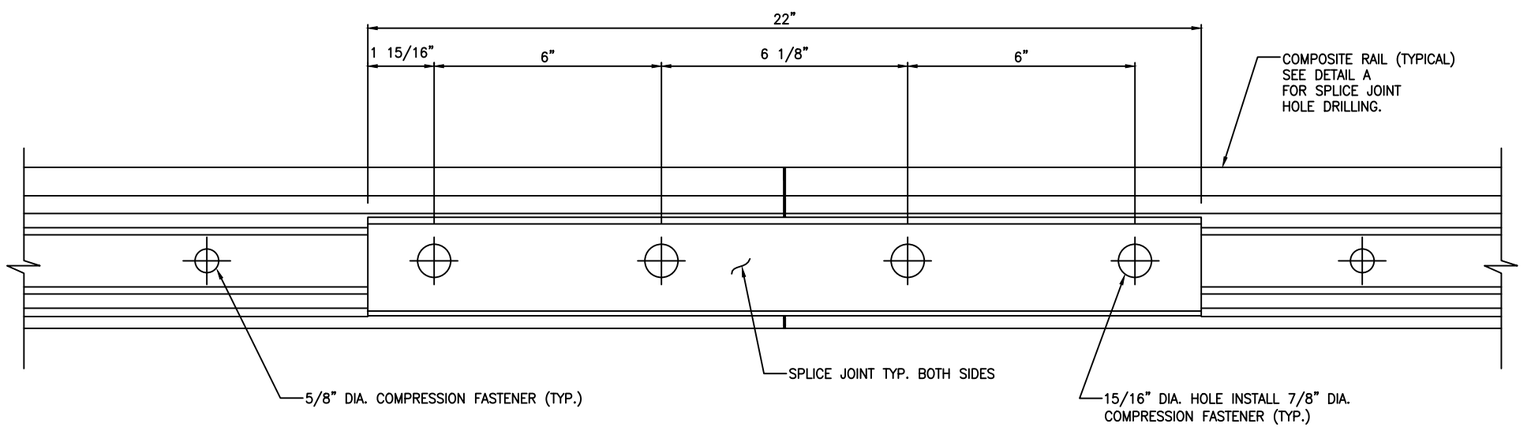

NOTES:

1. THE SHADED PORTION OF COMPOSITE RAIL INDICATES THE CLEARANCE ENVELOPE. THE UNSHADED PORTION REPRESENTS THE MANDATORY OUTLINE OF THE BASE RAIL.
2. COMPOSITE CONTACT RAIL SHALL BE INSTALLED SO THAT COMPRESSION FASTENER COLLARS FACE AWAY FROM CENTERLINE OF TRACK.

"PROFESSIONAL CERTIFICATION: I HEREBY CERTIFY THAT THESE DOCUMENTS WERE PREPARED OR APPROVED BY ME, AND THAT I AM A DULY LICENSED ARCHITECT UNDER THE LAWS OF THE DISTRICT OF COLUMBIA."

LICENSE No. _____.

EXPIRATION DATE: _____.

- DC REGISTER SECTION 3413

DESIGNED	W. TINKHAM	06/98 DATE
DRAWN	A. DAVIS	08/06 DATE
CHECKED	RAVI AMIN	01/15 DATE

REFERENCE DRAWINGS

NUMBER	TITLE

REVISIONS

DATE	NUM	DESCRIPTION
12/06	01	Minor Revisions
01/15	02	Revised Title Block and Changed DD to read ST

WASHINGTON METROPOLITAN AREA TRANSIT AUTHORITY

DEPARTMENT OF TRANSIT INFRASTRUCTURE AND ENGINEERING SERVICES
CENI - TRACK STRUCTURES & FACILITIES

REVISION SUBMITTED _____ DATE

APPROVED _____ DATE
THOMAS ROBINSON
DEPUTY CHIEF ENGINEER

CONTACT RAIL STANDARD DRAWING
COMPOSITE RAIL CLEARANCE ENVELOP
AND SPLICE JOINT ASSEMBLY
.

CONTRACT NO.	SCALE	DRAWING NO.	SHEET NO.
FQ-	NOT TO SCALE	ST-TW-CR-003	## of .

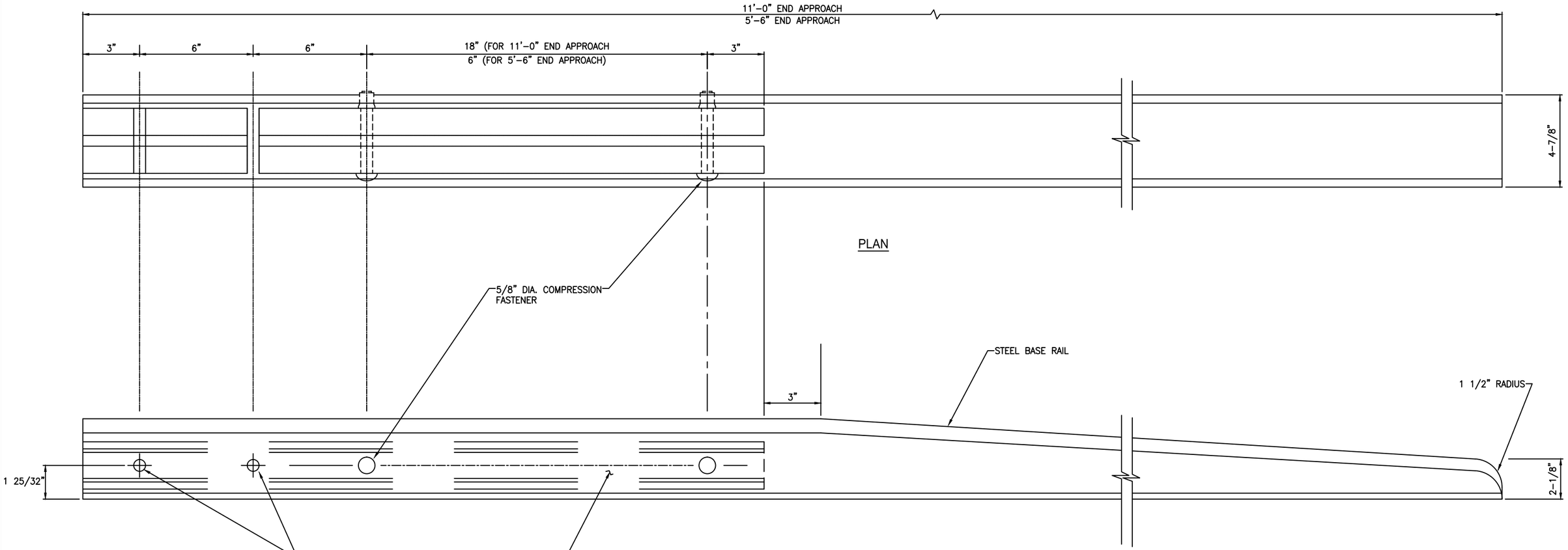

NOTE:
1. SEE DESIGN CRITERIA FOR USE OF 11'-0" AND 5'-6" END APPROACHES.

"PROFESSIONAL CERTIFICATION: I HEREBY CERTIFY THAT THESE DOCUMENTS WERE PREPARED OR APPROVED BY ME, AND THAT I AM A DULY LICENSED ARCHITECT UNDER THE LAWS OF THE DISTRICT OF COLUMBIA."

LICENSE No. .

EXPIRATION DATE: .

- DC REGISTER SECTION 3413

DESIGNED	W. TINKHAM	06/98 DATE
DRAWN	A. DAVIS	08/06 DATE
CHECKED	RAVI AMIN	01/15 DATE

REFERENCE DRAWINGS

NUMBER	TITLE

REVISIONS

DATE	NUM	DESCRIPTION
12/06	01	Minor Revisions, Notes Added
01/15	02	Revised Title Block and Changed DD to read ST

WASHINGTON METROPOLITAN AREA TRANSIT AUTHORITY

DEPARTMENT OF TRANSIT INFRASTRUCTURE AND ENGINEERING SERVICES
CENI - TRACK STRUCTURES & FACILITIES

REVISION SUBMITTED _____ DATE

APPROVED _____ DATE
THOMAS ROBINSON
DEPUTY CHIEF ENGINEER

CONTACT RAIL STANDARD DRAWING
COMPOSITE RAIL END APPROACHES

.

CONTRACT NO.	SCALE	DRAWING NO.	SHEET NO.
FQ-	3/8" = 1'-0"	ST-TW-CR-004	## of .

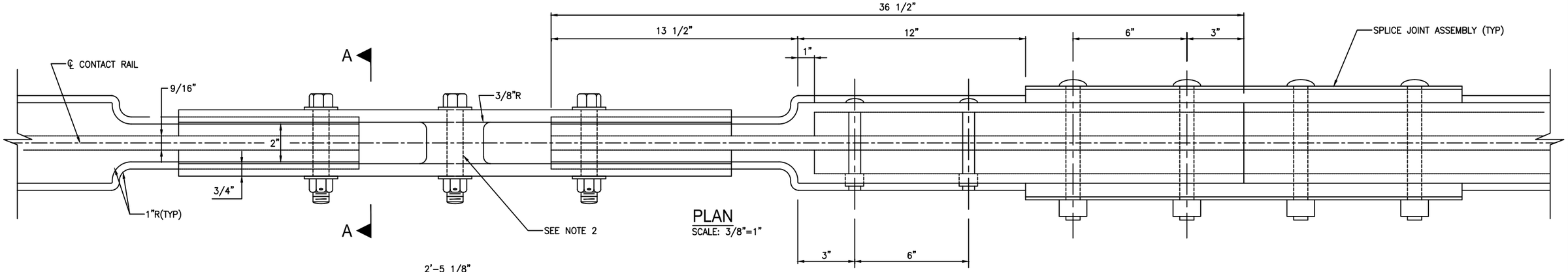

PLAN
SCALE: 3/8"=1"

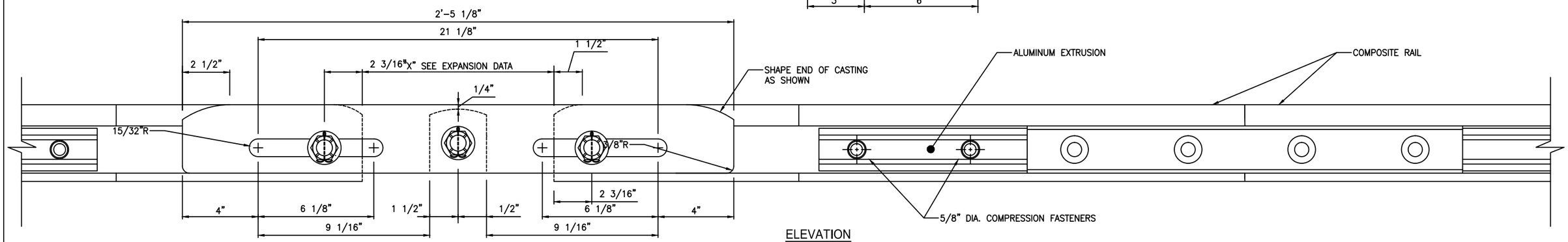

ELEVATION
SCALE: 3/8"=1"

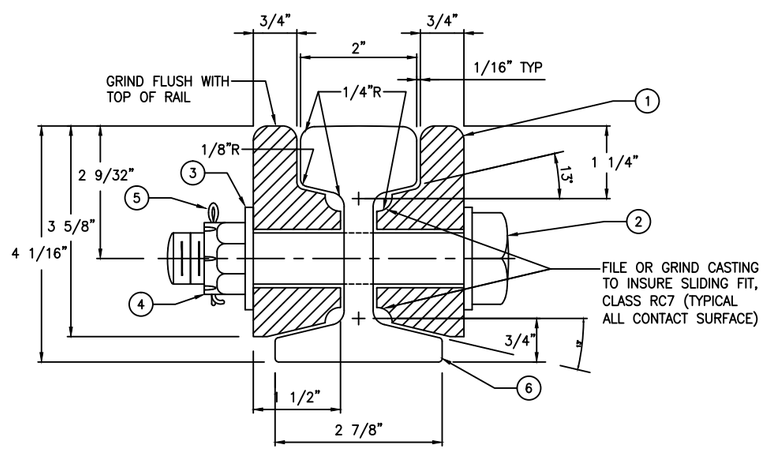

SECTION A-A
SCALE: 3/8"=1"

EXPANSION JOINT		
ITEM No.	QTY.	BILL OF MATERIAL
1	2	EXPANSION JOINT BAR (STEEL OR MALLEABLE IRON)
2	3	BOLT 7/8" x 5 1/4" LG, GALVANIZED STEEL
3	6	FLAT WASHER FOR 7/8" BOLT, GALVANIZED STEEL
4	3	CASTLE HEX. NUT FOR 7/8" BOLT GALVANIZED STEEL
5	3	COTTER PIN 1/8" x 1 3/4" LG. BRASS STEEL
6	2	COMPOSITE RAIL

NOTE:
1. TOLERANCES± 1° F, ± 1/8"
2. A KEYED JOINT SHALL BE PROVIDED IN THE EXPANSION JOINT BARS (ITEM No. 1)

EXPANSION DATA (SEE NOTE 1)																
TEMP OF RAILS–F°	0	10	20	30	40	50	60	70	80	90	100	110	120	130	140	150
DIMENSION "X"	16 11/16	15 7/8	15 1/16	14 1/4	13 7/16	12 5/8	11 13/16	11	10 3/16	9 3/8	8 9/16	7 3/4	6 15/16	6 1/8	5 5/16	4 1/2

"PROFESSIONAL CERTIFICATION: I HEREBY CERTIFY THAT THESE DOCUMENTS WERE PREPARED OR APPROVED BY ME, AND THAT I AM A DULY LICENSED ARCHITECT UNDER THE LAWS OF THE DISTRICT OF COLUMBIA."

LICENSE No. _____.

EXPIRATION DATE: _____.

- DC REGISTER SECTION 3413

DESIGNED	W. TINKHAM	06/98 DATE
DRAWN	A. DAVIS	11/06 DATE
CHECKED	RAVI AMIN	01/15 DATE

REFERENCE DRAWINGS

NUMBER	TITLE

REVISIONS

DATE	NUM	DESCRIPTION
12/08	01	Minor Revision
01/15	02	Revised Title Block and Changed DD to read ST

WASHINGTON METROPOLITAN AREA TRANSIT AUTHORITY

DEPARTMENT OF TRANSIT INFRASTRUCTURE AND ENGINEERING SERVICES
CENI - TRACK STRUCTURES & FACILITIES

REVISION SUBMITTED _____ DATE

APPROVED _____ DATE
THOMAS ROBINSON
DEPUTY CHIEF ENGINEER

CONTACT RAIL STANDARD DRAWING
COMPOSITE RAIL EXPANSION JOINT
ASSEMBLY AND DETAILS
.

CONTRACT NO.	SCALE	DRAWING NO.	SHEET NO.
FQ-	AS SHOWN	ST-TW-CR-005	## of .

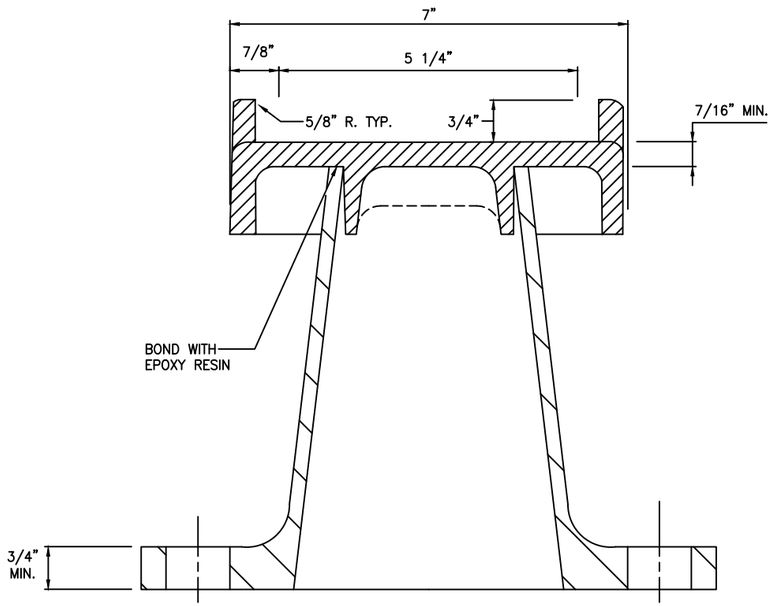

SECTION A-A

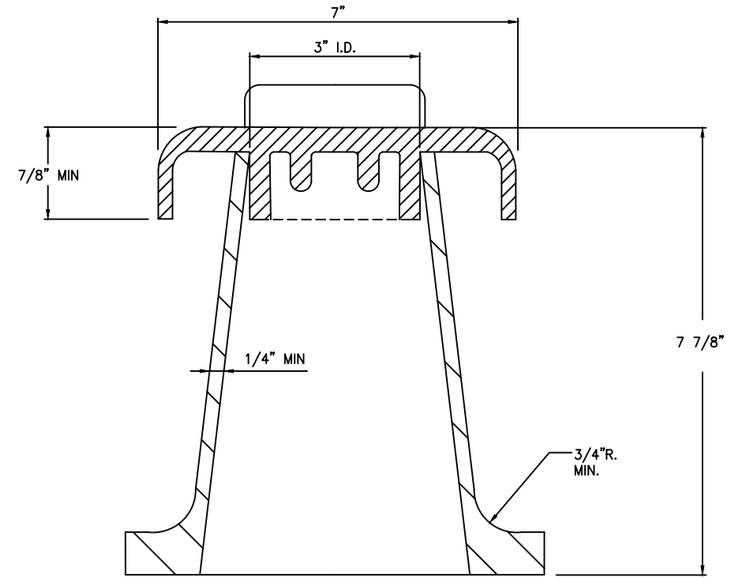

SECTION B-B

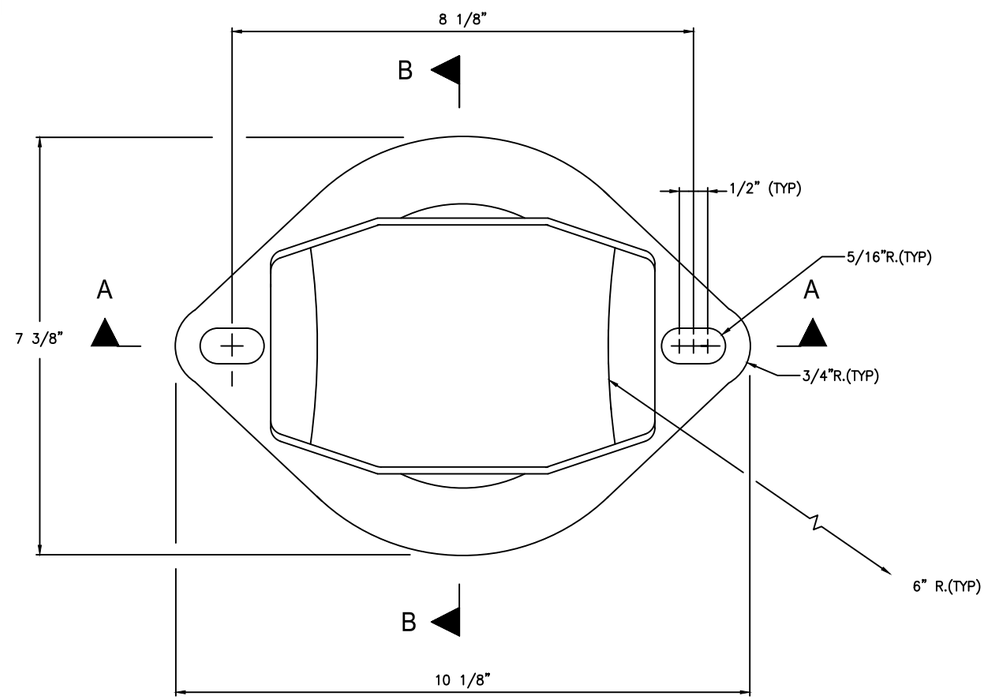

PLAN

NOTE:
1. TYPICAL EXTERIOR DIMENSIONS OF INSULATOR ARE SHOWN.
2. TOLERANCE OF WITHIN +/- 1/32.

"PROFESSIONAL CERTIFICATION: I HEREBY CERTIFY THAT THESE DOCUMENTS WERE PREPARED OR APPROVED BY ME, AND THAT I AM A DULY LICENSED ARCHITECT UNDER THE LAWS OF THE DISTRICT OF COLUMBIA."

LICENSE No. .

EXPIRATION DATE: .

- DC REGISTER SECTION 3413

DESIGNED	W. TINKHAM	06/98 DATE
DRAWN	A. AMIN	08/06 DATE
CHECKED	RAVI AMIN	01/15 DATE

REFERENCE DRAWINGS

NUMBER	TITLE

REVISIONS

DATE	NUM	DESCRIPTION
12/08	01	Minor Revisions
07/07	02	This Dwg. Revised Plastic Insulator Design to Fiberglass Design
01/15	03	Revised Title Block and Changed DD to read ST

WASHINGTON METROPOLITAN AREA TRANSIT AUTHORITY

DEPARTMENT OF TRANSIT INFRASTRUCTURE AND ENGINEERING SERVICES
CENI - TRACK STRUCTURES & FACILITIES

REVISION SUBMITTED DATE

APPROVED
THOMAS ROBINSON
DEPUTY CHIEF ENGINEER
DATE

CONTACT RAIL STANDARD DRAWING
CONTACT RAIL
FIBERGLASS INSULATOR
.

CONTRACT NO.	SCALE	DRAWING NO.	SHEET NO.
FQ-	3/4" = 1"	ST-TW-CR-006	## of .

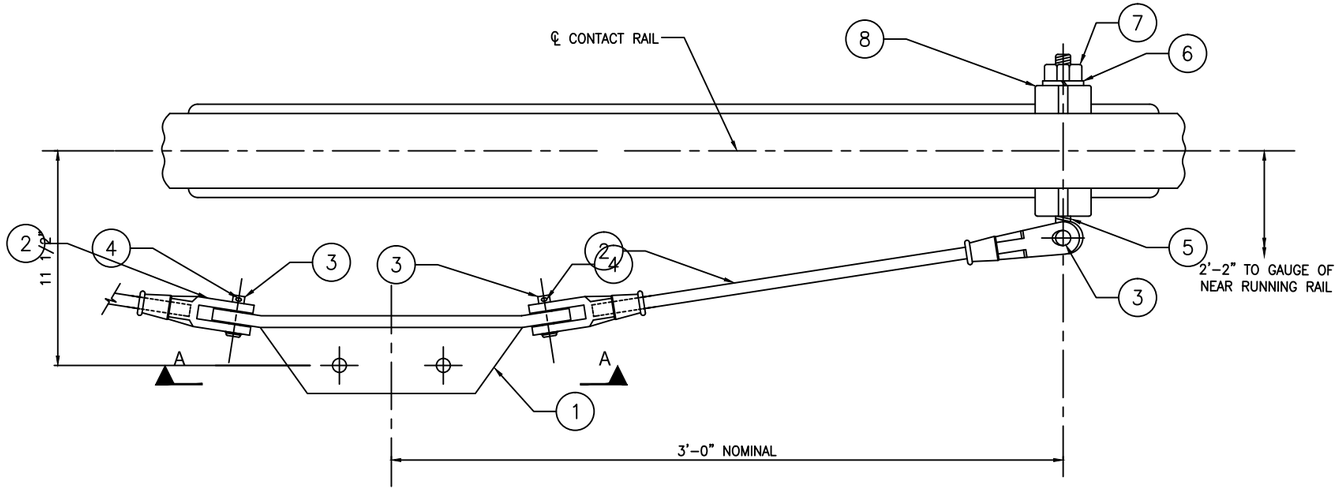

PLAN OF ASSEMBLY
NOT TO SCALE

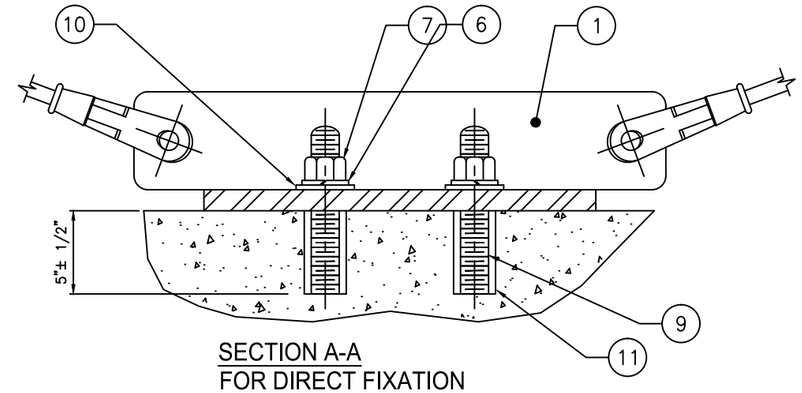

SECTION A-A
FOR DIRECT FIXATION
NOT TO SCALE

ASSEMBLY DESCRIPTIONS (SEE SECTION A–A)
ASSEMBLY No.1 CONTACT RAIL ANCHOR FOR TIMBER TIE
ASSEMBLY No.2 CONTACT RAIL ANCHOR FOR DIRECT FIXATION

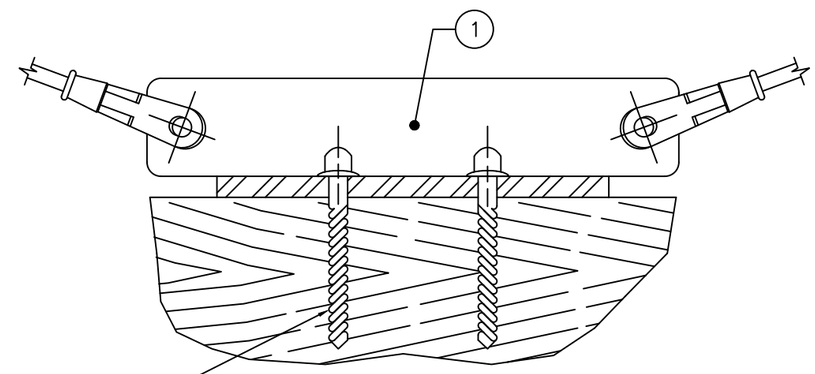

SECTION A-A FOR
TIMBER TIE
NOT TO SCALE

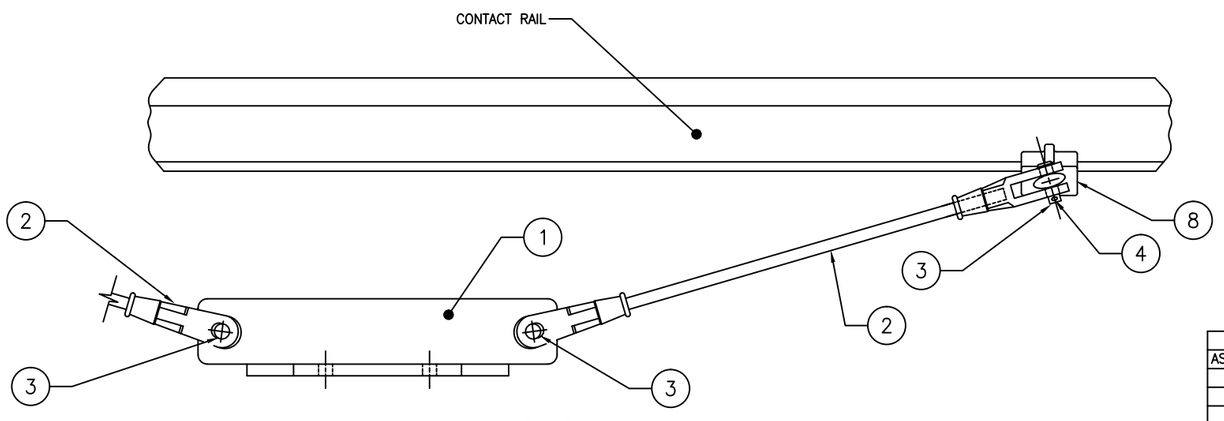

ELEVATION OF ASSEMBLY
NOT TO SCALE

QUANTITY ASSY–1	QUANTITY ASSY–2	ITEM No.	BILL OF MATERIAL
1	1	1	BRACKET GALVANIZED STEEL
2	2	2	CLEVIS ASSEMBLY
4	4	3	CLEVIS PIN, .750" DIA.x2–1/8" LONG GALVANIZED STEEL
4	4	4	COTTER PIN, .125" DIA.x1.0" LONG BRASS
2	2	5	SHOULDER EYE BOLT, 3/4" DIA. GALVANIZED STEEL
2	4	6	LOCKWASHER, 3/4" DIA. GALVANIZED STEEL
2	4	7	HEX. NUT, 3/4" DIA. GALVANIZED STEEL
4	4	8	CLAMP, MALLEABLE IRON, GALVANIZED
–	2	9	THREADED STUD 3/4' DIA.x7–3/4" LONG GALVANIZED STEEL
–	2	10	FLAT WASHER 3/4" DIA.x3/16" THICK GALVANIZED STEEL
–	1	11	INSERT ANCHORING MATERIAL
2	–	12	WASHERHEAD DRIVE SPIKE 11/16" DIA.x6" LONG GALVANIZED STEEL

"PROFESSIONAL CERTIFICATION: I HEREBY CERTIFY THAT THESE DOCUMENTS WERE PREPARED OR APPROVED BY ME, AND THAT I AM A DULY LICENSED ARCHITECT UNDER THE LAWS OF THE DISTRICT OF COLUMBIA."

LICENSE No. _____.

EXPIRATION DATE: _____.

- DC REGISTER SECTION 3413

DESIGNED	W. TINKHAM	06/98 DATE
DRAWN	A. DAVIS	08/06 DATE
CHECKED	RAVI AMIN	01/15 DATE

REFERENCE DRAWINGS

NUMBER	TITLE

REVISIONS

DATE	NUM	DESCRIPTION
12/06	01	Minor Revisions
01/15	02	Revised Title and Changed DD to read ST

WASHINGTON METROPOLITAN AREA TRANSIT AUTHORITY

DEPARTMENT OF TRANSIT INFRASTRUCTURE AND ENGINEERING SERVICES
CENI - TRACK STRUCTURES & FACILITIES

REVISION SUBMITTED _____ DATE

APPROVED _____ DATE
THOMAS ROBINSON
DEPUTY CHIEF ENGINEER

CONTACT RAIL STANDARD DRAWING
ANCHOR ASSEMBLY DETAILS AND SECTIONS
SHEET 1 OF 2
.

CONTRACT NO.	SCALE	DRAWING NO.	SHEET NO.
FQ-	NOT TO SCALE	ST-TW-CR-009	## of .

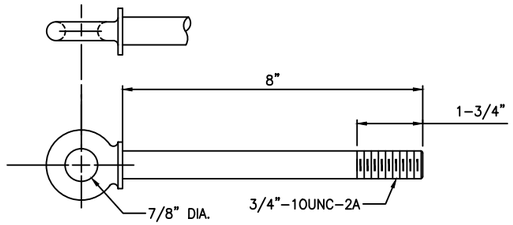

SHOULDER EYE BOLT
MATERIAL: FORGED STEEL GALVANIZED

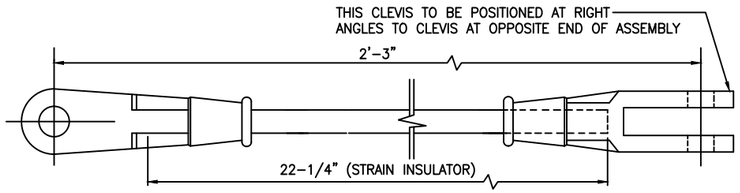

CLEVIS ASSEMBLY

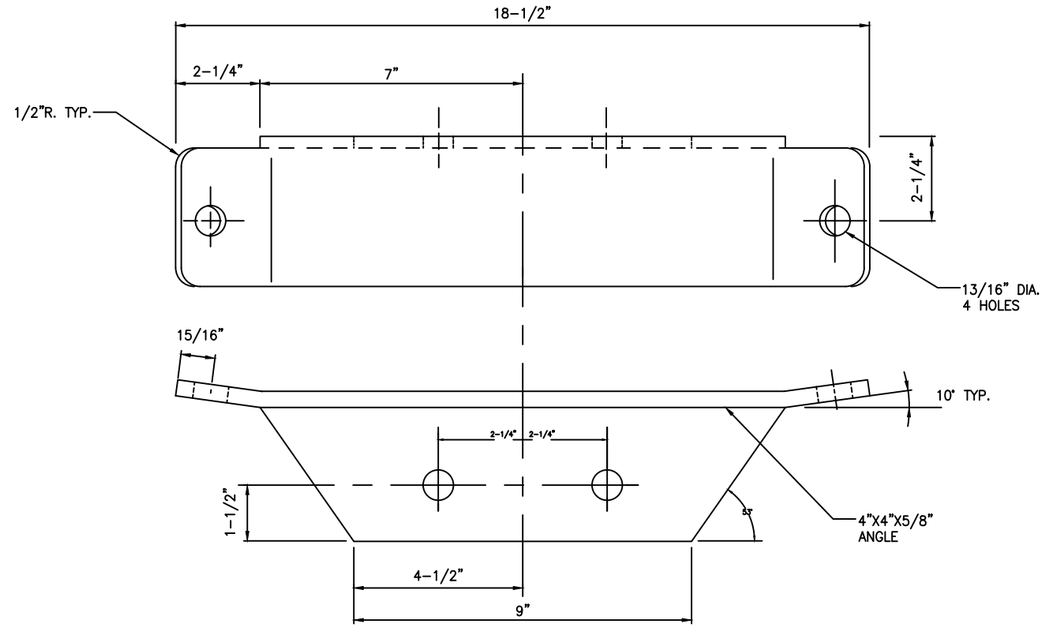

BRACKET
MATERIAL: STEEL GALVANIZED

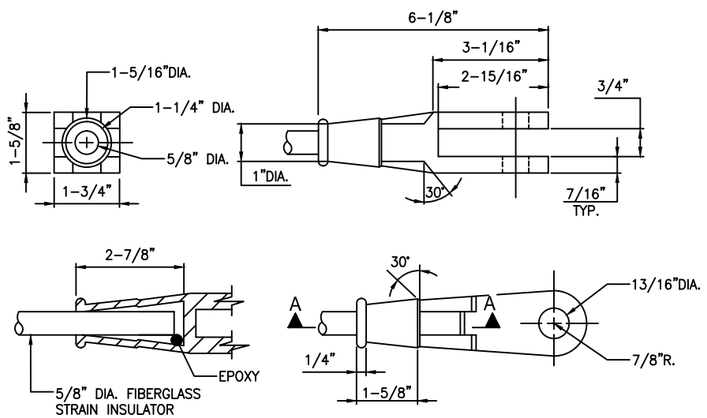

SECTION A-A

CLEVIS
MATERIAL: MALLEABLE IRON, GALVANIZED

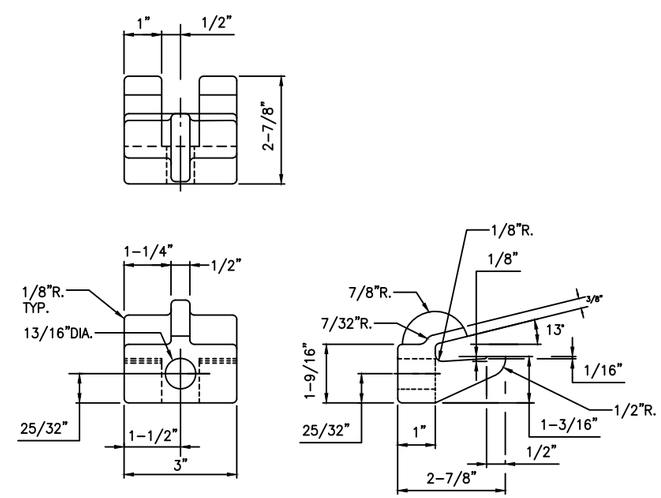

CLAMP
MATERIAL: FORGED IRON, GALVANIZED

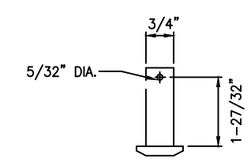

CLEVIS PIN
MATERIAL: STEEL, GALVANIZED

"PROFESSIONAL CERTIFICATION: I HEREBY CERTIFY THAT THESE DOCUMENTS WERE PREPARED OR APPROVED BY ME, AND THAT I AM A DULY LICENSED ARCHITECT UNDER THE LAWS OF THE DISTRICT OF COLUMBIA."

LICENSE No. _____.

EXPIRATION DATE: _____.

- DC REGISTER SECTION 3413

DESIGNED	W. TINKHAM	06/98 DATE
DRAWN	A. AMIN	08/06 DATE
CHECKED	RAVI AMIN	01/15 DATE

REFERENCE DRAWINGS

NUMBER	TITLE

REVISIONS

DATE	NUM	DESCRIPTION
12/06	01	Minor Revision
01/15	02	Revised Title Block and Changed DD to read ST

WASHINGTON METROPOLITAN AREA TRANSIT AUTHORITY

DEPARTMENT OF TRANSIT INFRASTRUCTURE AND ENGINEERING SERVICES
CENI - TRACK STRUCTURES & FACILITIES

REVISION SUBMITTED _____ DATE

APPROVED _____ DATE
THOMAS ROBINSON
DEPUTY CHIEF ENGINEER

CONTACT RAIL STANDARD DRAWING
ANCHOR ASSEMBLY DETAILS AND SECTIONS
SHEET 2 OF 2
.

CONTRACT NO.	SCALE	DRAWING NO.	SHEET NO.
FQ-	NOT TO SCALE	ST-TW-CR-010	## of .

NOTES:

1. CONTRACTOR SHALL ADJUST LOCATION OF CHANNEL SO THAT CABLE DOES NOT TOUCH THE CONCRETE INVERT.
2. PROVIDE ADEQUATE SLACK IN CABLES TO ALLOW FOR 12" OF EXPANSION/CONTRACTION OF THE CONTACT RAIL.
3. SEE DRAWING ST-TW-CR-12 FOR CABLE MOUNTING REQUIREMENT IN BALLASTED TRACK AREA.

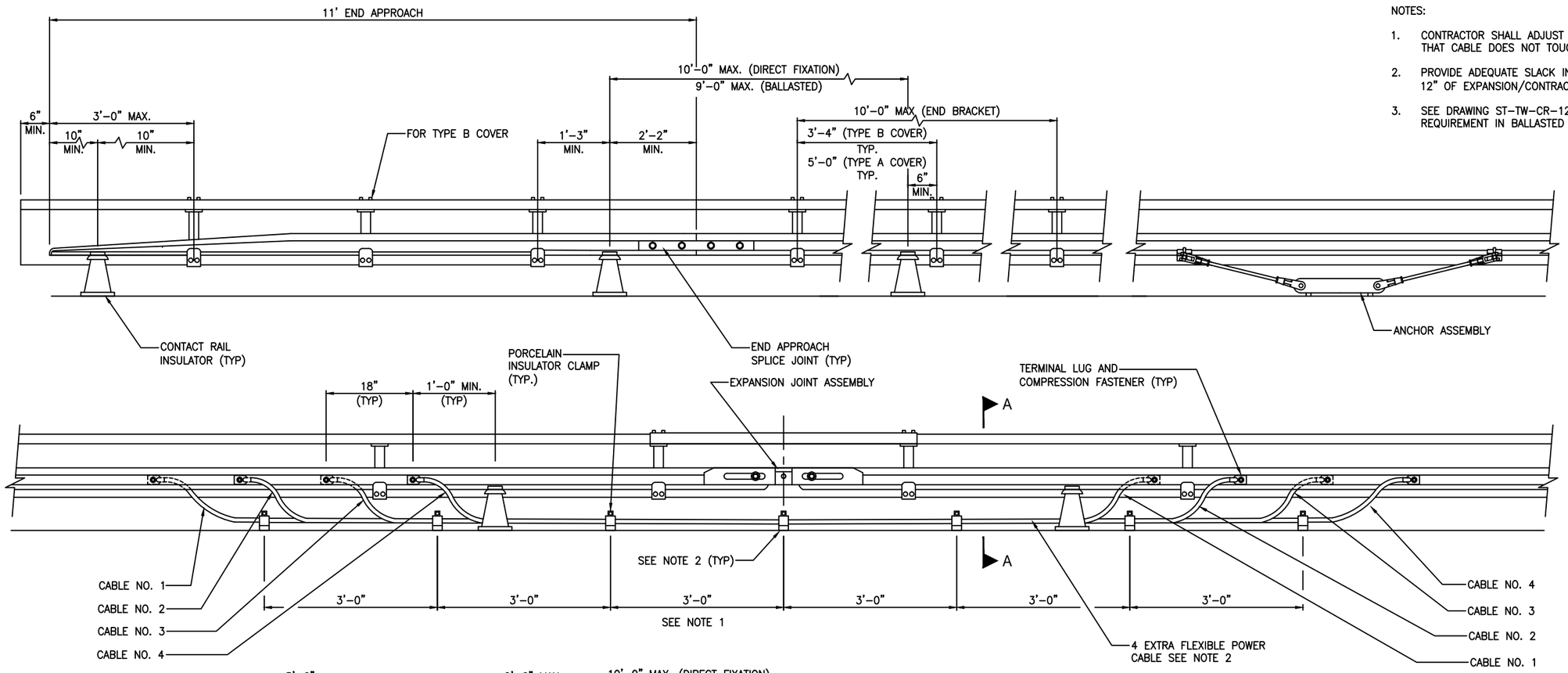

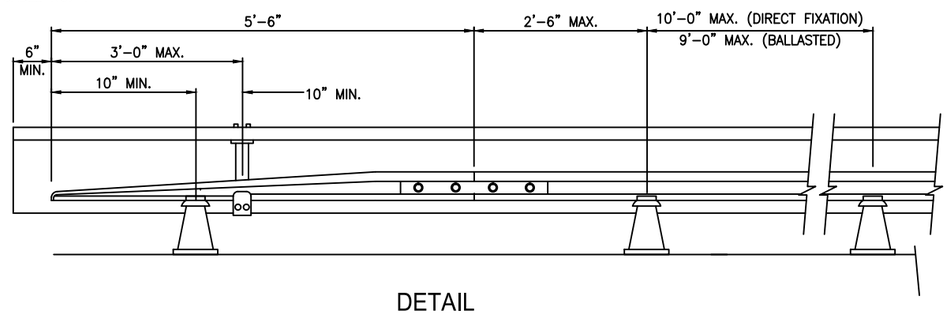

DETAIL
5'-6" END APPROACH
NOT TO SCALE

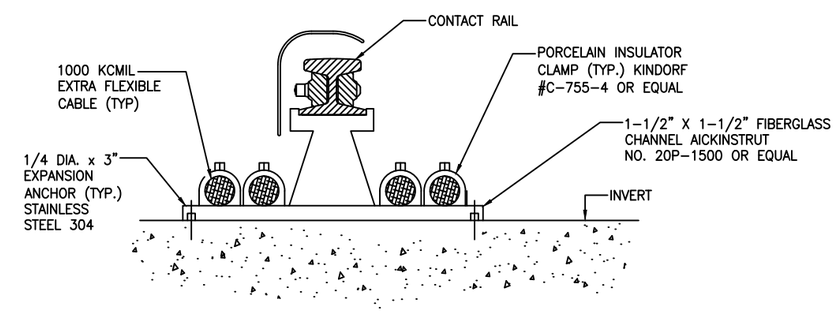

SECTION A-A
NOT TO SCALE

"PROFESSIONAL CERTIFICATION: I HEREBY CERTIFY THAT THESE DOCUMENTS WERE PREPARED OR APPROVED BY ME, AND THAT I AM A DULY LICENSED ARCHITECT UNDER THE LAWS OF THE DISTRICT OF COLUMBIA."

LICENSE No. _____

EXPIRATION DATE: _____

- DC REGISTER SECTION 3413

DESIGNED	W. TINKHAM	06/98 DATE
DRAWN	A. DAVIS	08/06 DATE
CHECKED	RAVI AMIN	01/15 DATE

REFERENCE DRAWINGS

NUMBER	TITLE

REVISIONS

DATE	NUM	DESCRIPTION
12/06	01	Minor Revision
01/15	02	Revised Title Block and Changed DD to read ST

WASHINGTON METROPOLITAN AREA TRANSIT AUTHORITY

DEPARTMENT OF TRANSIT INFRASTRUCTURE AND ENGINEERING SERVICES
CENI - TRACK STRUCTURES & FACILITIES

REVISION SUBMITTED _____ DATE

APPROVED _____ DATE
THOMAS ROBINSON
DEPUTY CHIEF ENGINEER

CONTACT RAIL STANDARD DRAWING
SPACING - EXPANSION JOINT,
ANCHORS AND INSULATORS
.

CONTRACT NO.	SCALE	DRAWING NO.	SHEET NO.
FQ-	NOT TO SCALE	ST-TW-CR-011	## of .

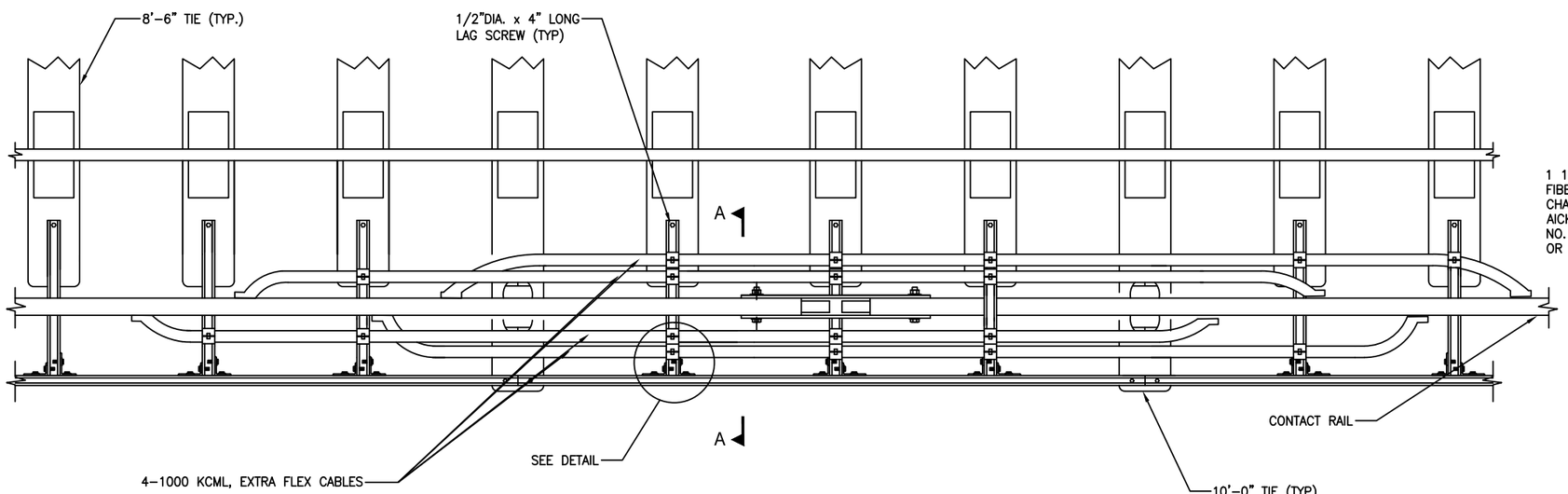

PLAN
NOT TO SCALE

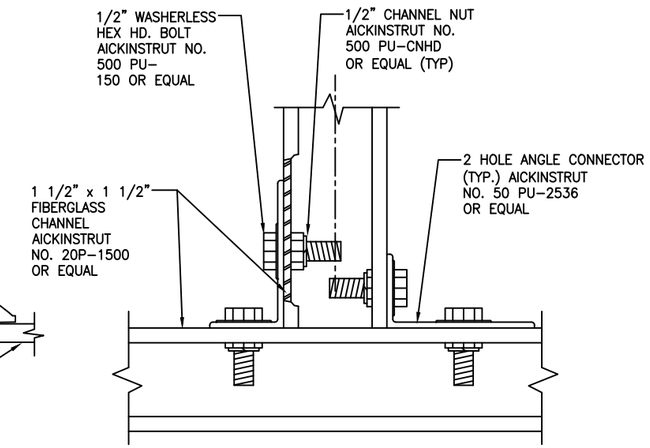

DETAIL 1
NOT TO SCALE

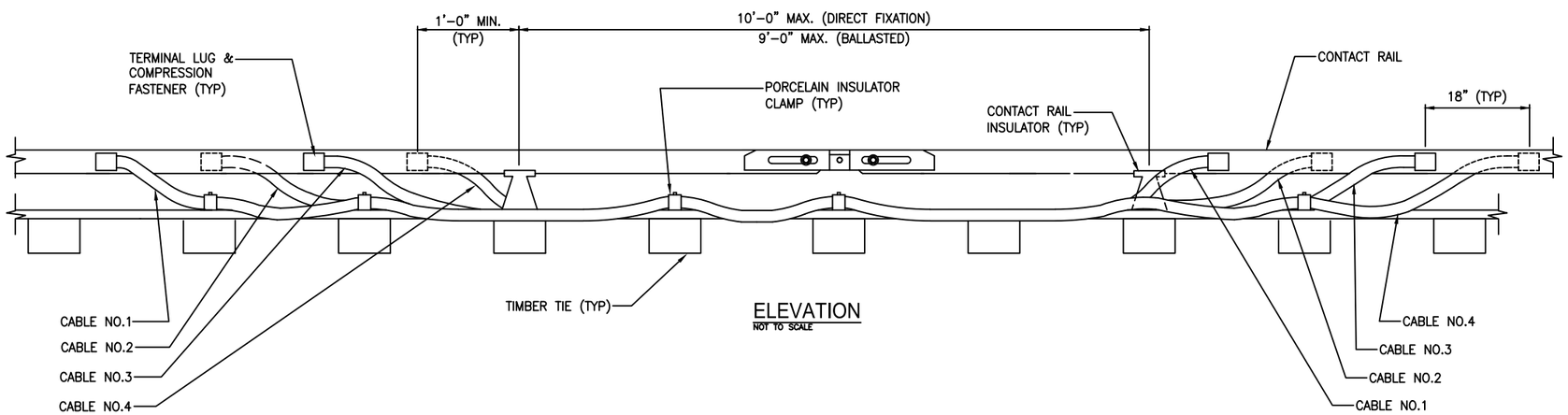

ELEVATION
NOT TO SCALE

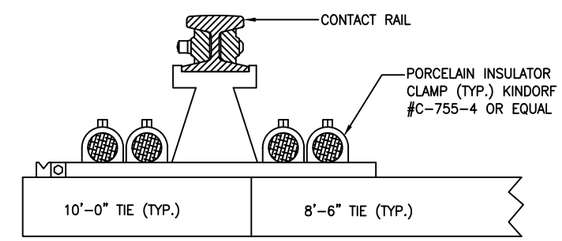

SECTION A-A
NOT TO SCALE

"PROFESSIONAL CERTIFICATION: I HEREBY CERTIFY THAT THESE DOCUMENTS WERE PREPARED OR APPROVED BY ME, AND THAT I AM A DULY LICENSED ARCHITECT UNDER THE LAWS OF THE DISTRICT OF COLUMBIA."

LICENSE No. .

EXPIRATION DATE: .

- DC REGISTER SECTION 3413

DESIGNED	W. TINKHAM	06/98 DATE
DRAWN	A. DAVIS	08/06 DATE
CHECKED	RAVI AMIN	01/15 DATE

REFERENCE DRAWINGS

NUMBER	TITLE

REVISIONS

DATE	NUM	DESCRIPTION
09/00	01	Revised and Issued by the Authority
12/06	02	Minor Revision
01/15	03	Revised Title Block and Changed DD to read ST

WASHINGTON METROPOLITAN AREA TRANSIT AUTHORITY

DEPARTMENT OF TRANSIT INFRASTRUCTURE AND ENGINEERING SERVICES
CENI - TRACK STRUCTURES & FACILITIES

REVISION SUBMITTED _____ DATE

APPROVED _____ DATE
THOMAS ROBINSON
DEPUTY CHIEF ENGINEER

CONTACT RAIL STANDARD DRAWING
EXPANSION JOINT JUMPER CABLE SUPPORT
DETAILS IN BALLASTED TRACK
.

CONTRACT NO.	SCALE	DRAWING NO.	SHEET NO.
FQ-	NOT TO SCALE	ST-TW-CR-012	## of .

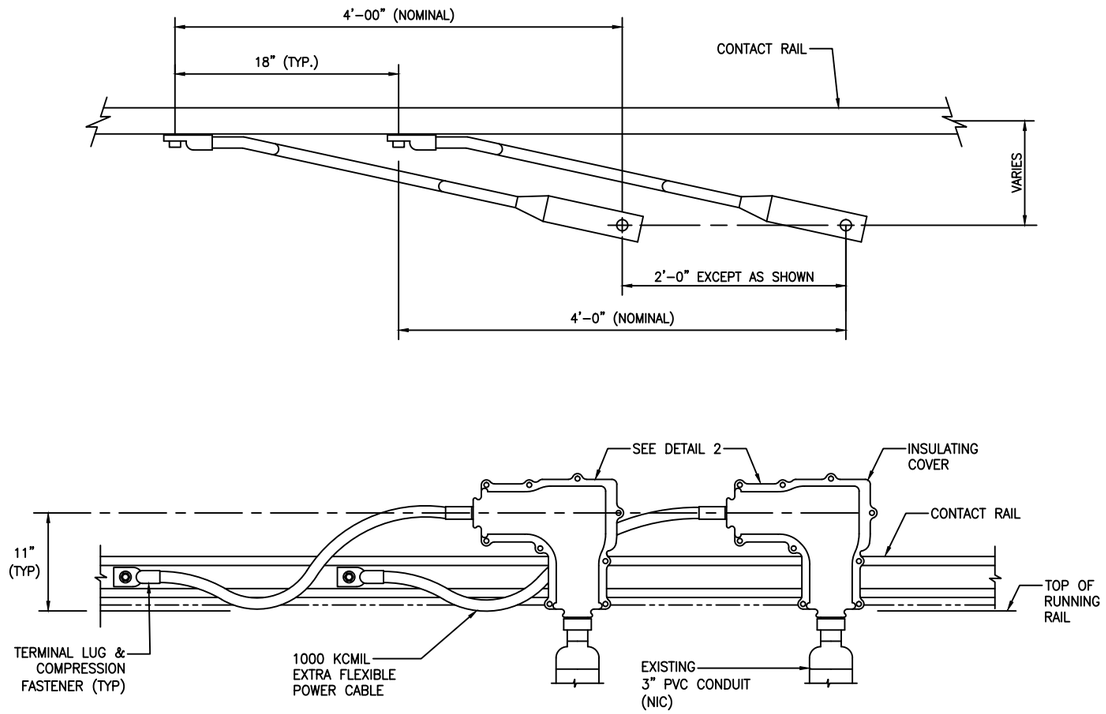

DETAIL "1"
TYPICAL CONNECTION
FOR COMPOSITE CONTACT RAIL
NOT TO SCALE

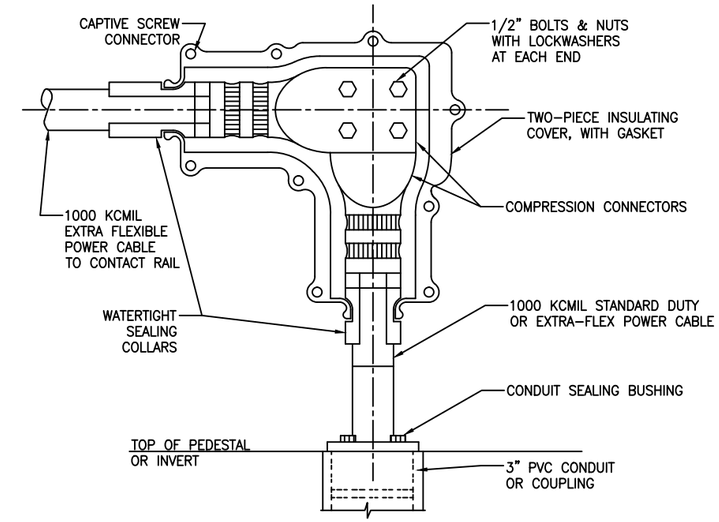

DETAIL "2"
CABLE CONNECTOR ASSEMBLY
NOT TO SCALE

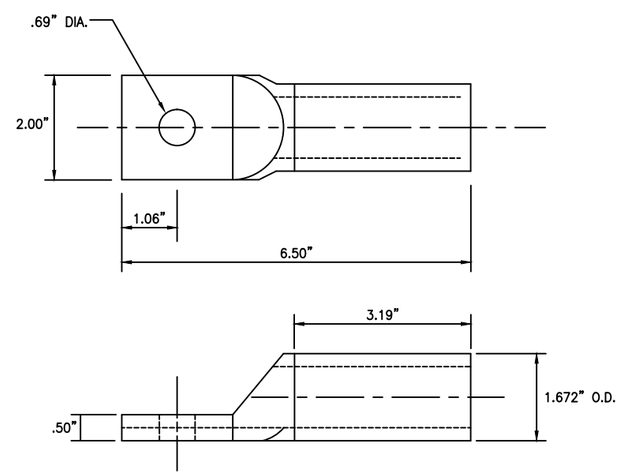

TERMINAL LUG
NOT TO SCALE

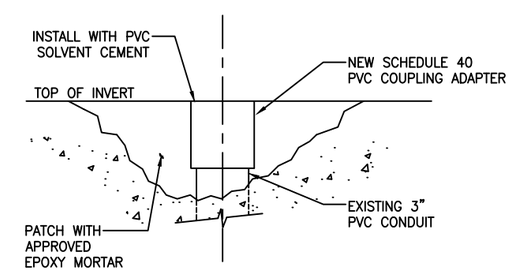

METHOD FOR REPAIRING
BROKEN TRACTION POWER CONDUIT
NOT TO SCALE

"PROFESSIONAL CERTIFICATION: I HEREBY CERTIFY THAT THESE DOCUMENTS WERE PREPARED OR APPROVED BY ME, AND THAT I AM A DULY LICENSED ARCHITECT UNDER THE LAWS OF THE DISTRICT OF COLUMBIA."

LICENSE No. _____

EXPIRATION DATE: _____

- DC REGISTER SECTION 3413

DESIGNED	W. TINKHAM	06/98 DATE
DRAWN	A. AMIN	08/06 DATE
CHECKED	RAVI AMIN	01/15 DATE

REFERENCE DRAWINGS

NUMBER	TITLE

REVISIONS

DATE	NUM	DESCRIPTION
12/08	01	Minor Revision
01/15	02	Revised Title Block and Changed DD to read ST

WASHINGTON METROPOLITAN AREA TRANSIT AUTHORITY

DEPARTMENT OF TRANSIT INFRASTRUCTURE AND ENGINEERING SERVICES
CENI - TRACK STRUCTURES & FACILITIES

REVISION SUBMITTED _____ DATE

APPROVED _____ DATE
THOMAS ROBINSON
DEPUTY CHIEF ENGINEER

CONTACT RAIL STANDARD DRAWING
COMPOSITE RAIL
TYPICAL CONDUIT AND CABLE ARRANGEMENT

CONTRACT NO.	SCALE	DRAWING NO.	SHEET NO.
FQ-	NOT TO SCALE	ST-TW-CR-017	## of .

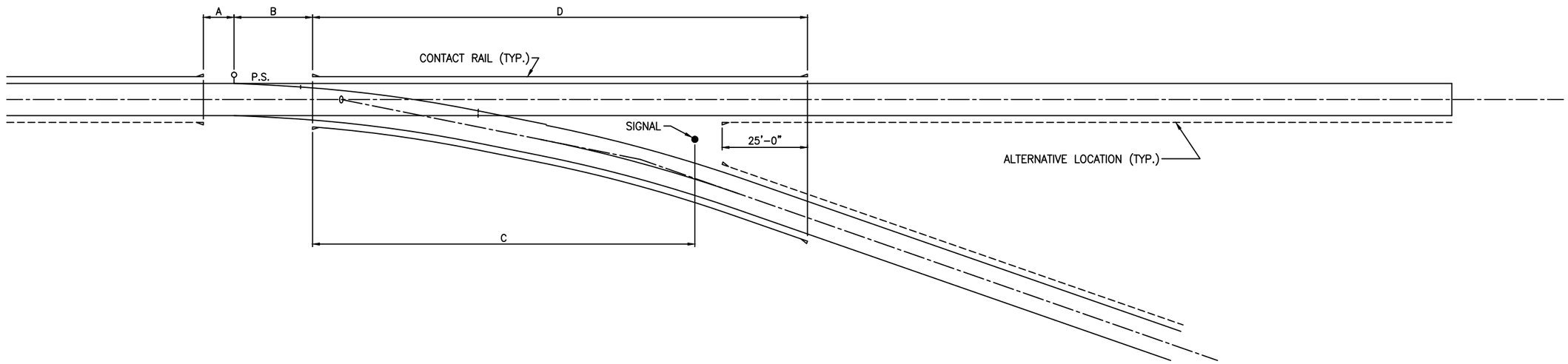

TURNOUT NO.	A	B	C	D
6	9'-0"	23'-0"	*	145'-0"
8	9'-0"	23'-0"	*	180'-0"
10	10'-0"	30'-0"	*	205'-0"
15	10'-0"	58'-0"	*	280'-0"

(*) SEE DESIGN CRITERIA

NOTES:

1. FOR LOCATION AND DETAILS OF CONTACT RAIL CABLE AT TRACKSIDE, ELECTRICAL DD DRAWINGS.

2. CONTACT RAIL LAYOUTS/ ARRANGEMENTS MAY VARY FROM CONTRACT TO CONTRACT AND SHOULD BE FIELD VERIFIED PRIOR TO ANY PROCUREMENT OR FABRICATION PHASES. DISTANCES SHOWN ARE BASED ON CLEARANCES TO TANGENT DIVERGING TRACK–SEE DESIGN CRITERIA AND REFER TO ST–C–004, VEHICLE CLEARANCE ENVELOPE.

"PROFESSIONAL CERTIFICATION: I HEREBY CERTIFY THAT THESE DOCUMENTS WERE PREPARED OR APPROVED BY ME, AND THAT I AM A DULY LICENSED ARCHITECT UNDER THE LAWS OF THE DISTRICT OF COLUMBIA."

LICENSE No. _____.

EXPIRATION DATE: _____.

- DC REGISTER SECTION 3413

DESIGNED W. TINKHAM 06/98 DATE
DRAWN A. AMIN 08/06 DATE
CHECKED RAVI AMIN 01/15 DATE

REFERENCE DRAWINGS

NUMBER	TITLE

REVISIONS

DATE	NUM	DESCRIPTION
12/06	01	Minor Revision
01/15	02	Revised Title Block and Changed DD to readd ST

WASHINGTON METROPOLITAN AREA TRANSIT AUTHORITY

DEPARTMENT OF TRANSIT INFRASTRUCTURE AND ENGINEERING SERVICES
CENI - TRACK STRUCTURES & FACILITIES

REVISION SUBMITTED _____ DATE

APPROVED _____ DATE
THOMAS ROBINSON
DEPUTY CHIEF ENGINEER

CONTACT RAIL STANDARD DRAWING
CONTACT RAIL ARRANGEMENT
NO. 6, NO. 8, NO. 10, NO. 15
TURNOUTS

CONTRACT NO.	SCALE	DRAWING NO.	SHEET NO.
FQ-	NOT TO SCALE	ST-TW-CR-018	## of .

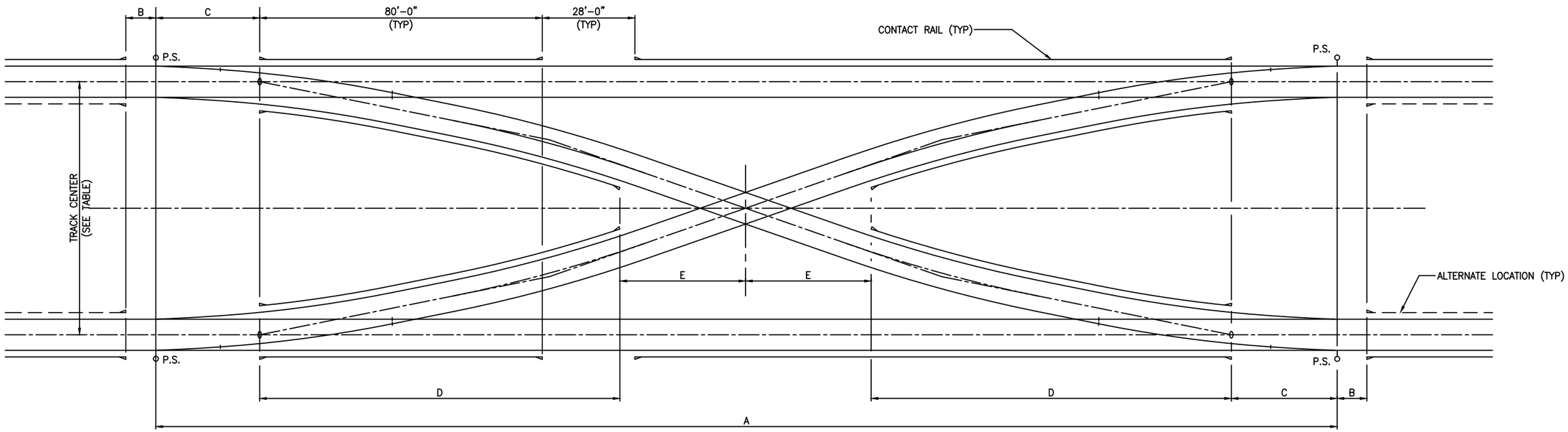

#10 DOUBLE CROSSOVER PLAN

TRACK CENTERS	A	B	C	D	E
14'-0"	202.48'	10'-0"	31'-42"	15.0'	53.5'
36'-10"	352.81'	10'-0"	31'-42"	105.0'	41'
40'-6"	369.71'	7.625'	31'-42"	124.0'	30.865'

NOTE:
1. FOR LOCATION AND DETAILS OF CONTACT RAIL CABLES AT TRACKSIDE SEE ELECTRICAL DD DRAWINGS.
2. CONTRACT RAIL LAYOUTS/ ARRANGEMENTS MAY VARY FROM CONTRACT TO CONTRACT AND SHOULD VERIFIED PRIOR TO ANY PROCUREMENT OR FABRICATION PHASES.

"PROFESSIONAL CERTIFICATION: I HEREBY CERTIFY THAT THESE DOCUMENTS WERE PREPARED OR APPROVED BY ME, AND THAT I AM A DULY LICENSED ARCHITECT UNDER THE LAWS OF THE DISTRICT OF COLUMBIA."

LICENSE No. _____.

EXPIRATION DATE: _____.

- DC REGISTER SECTION 3413

DESIGNED W. TINKHAM 10/98 DATE
DRAWN A. DAVIS 08/06 DATE
CHECKED RAVI AMIN 01/15 DATE

REFERENCE DRAWINGS

NUMBER	TITLE

REVISIONS

DATE	NUM	DESCRIPTION
12/06	01	Minor Revision
09/06	02	Added Note No. 2
01/15	03	Revised Title Block and Changed DD to read ST

WASHINGTON METROPOLITAN AREA TRANSIT AUTHORITY

DEPARTMENT OF TRANSIT INFRASTRUCTURE AND ENGINEERING SERVICES
CENI - TRACK STRUCTURES & FACILITIES

REVISION SUBMITTED _____ DATE

APPROVED _____ DATE
THOMAS ROBINSON
DEPUTY CHIEF ENGINEER

CONTACT RAIL STANDARD DRAWING
CONTACT RAIL ARRANGEMENT
NO. 10 DOUBLE CROSSOVER
14'-0", 36'-10" AND 40'-6" TRACK CENTERS

CONTRACT NO.	SCALE	DRAWING NO.	SHEET NO.
FQ-	NOT TO SCALE	ST-TW-CR-022	## of .

WMATA CONFIDENTIAL INFORMATION – DO NOT DISCLOSE WITHOUT EXPRESS WRITTEN APPROVAL OF THE GENERAL MANAGER OF THE AUTHORITY

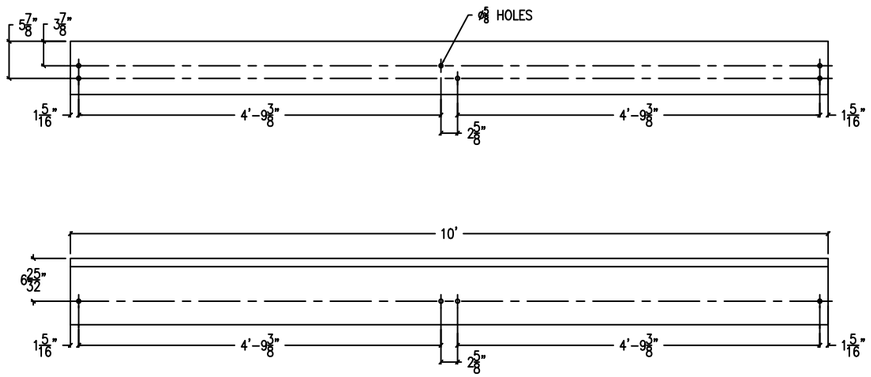

TYPE A COVERBOARD

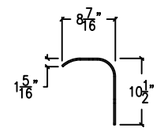

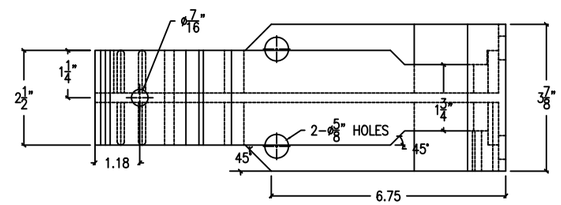

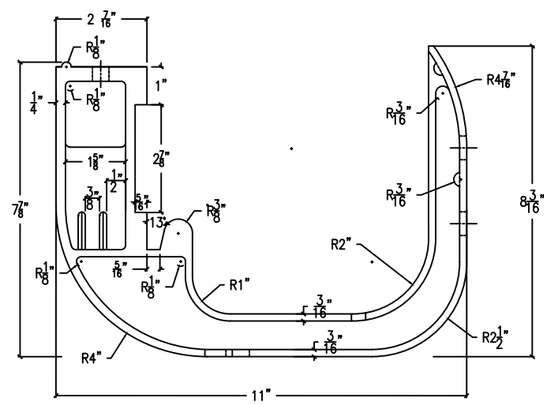

CONTACT RAIL SUPPORT BRACKET

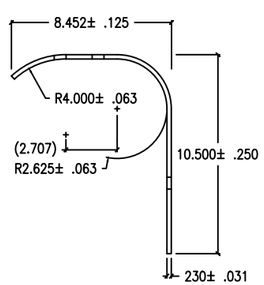

VIEW A

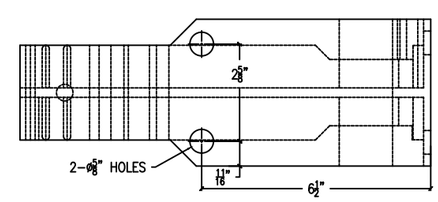

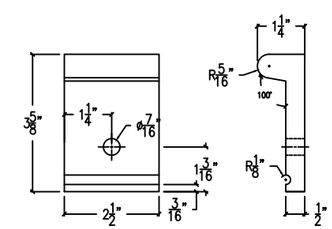

CONTACT RAIL SUPPORT CLAMP

"PROFESSIONAL CERTIFICATION: I HEREBY CERTIFY THAT THESE DOCUMENTS WERE PREPARED OR APPROVED BY ME, AND THAT I AM A DULY LICENSED ARCHITECT UNDER THE LAWS OF THE DISTRICT OF COLUMBIA."

LICENSE No. _____

EXPIRATION DATE: _____

- DC REGISTER SECTION 3413

DESIGNED	TSFA	10/14 DATE
DRAWN	TSFA	10/14 DATE
CHECKED	RAVI AMIN	01/15 DATE

REFERENCE DRAWINGS

NUMBER	TITLE

REVISIONS

DATE	NUM	DESCRIPTION

WASHINGTON METROPOLITAN AREA TRANSIT AUTHORITY

DEPARTMENT OF TRANSIT INFRASTRUCTURE AND ENGINEERING SERVICES
CENI - TRACK STRUCTURES & FACILITIES

REVISION SUBMITTED _____ DATE

APPROVED _____ DATE
THOMAS ROBINSON
DEPUTY CHIEF ENGINEER

CONTACT RAIL STANDARD DRAWING
TYPE A COVERBOARD AND
BRACKET MOUNTING DETAILS
.

CONTRACT NO.	SCALE	DRAWING NO.	SHEET NO.
FQ-	NOT TO SCALE	ST-TW-CR-024	## of .

WMATA CONFIDENTIAL INFORMATION – DO NOT DISCLOSE WITHOUT EXPRESS WRITTEN APPROVAL OF THE GENERAL MANAGER OF THE AUTHORITY

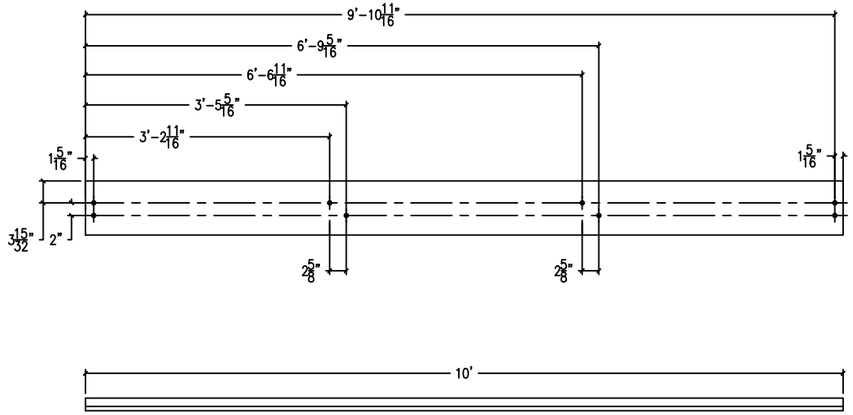

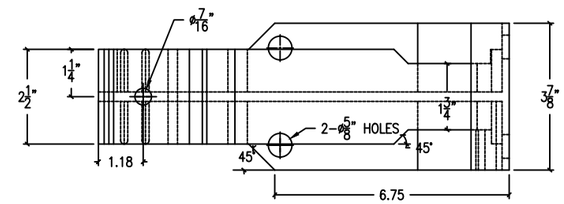

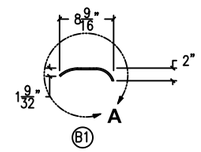

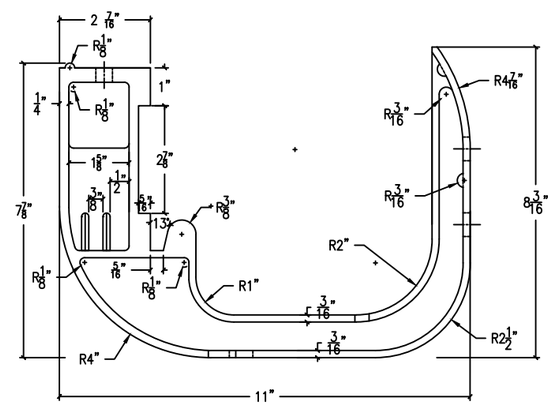

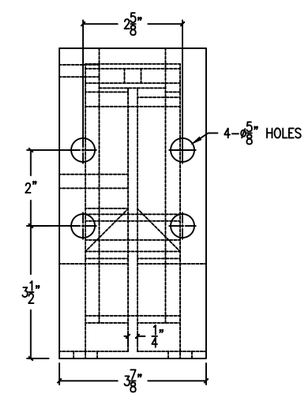

CONTACT RAIL SUPPORT BRACKET

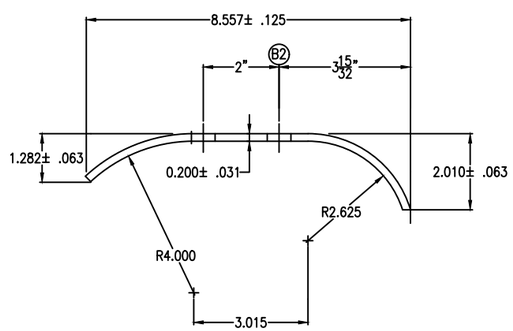

VIEW A

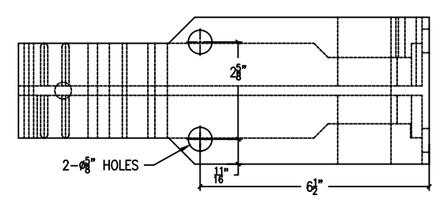

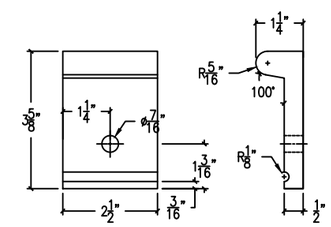

CONTACT RAIL SUPPORT CLAMP

"PROFESSIONAL CERTIFICATION: I HEREBY CERTIFY THAT THESE DOCUMENTS WERE PREPARED OR APPROVED BY ME, AND THAT I AM A DULY LICENSED ARCHITECT UNDER THE LAWS OF THE DISTRICT OF COLUMBIA."

LICENSE No. _____.

EXPIRATION DATE: _____.

- DC REGISTER SECTION 3413

DESIGNED	TSFA	10/14 DATE
DRAWN	TSFA	10/14 DATE
CHECKED	RAVI AMIN	01/15 DATE

REFERENCE DRAWINGS

NUMBER	TITLE

REVISIONS

DATE	NUM	DESCRIPTION

WASHINGTON METROPOLITAN AREA TRANSIT AUTHORITY

DEPARTMENT OF TRANSIT INFRASTRUCTURE AND ENGINEERING SERVICES
CENI - TRACK STRUCTURES & FACILITIES

REVISION SUBMITTED _____ DATE

APPROVED _____ DATE
THOMAS ROBINSON
DEPUTY CHIEF ENGINEER

CONTACT RAIL STANDARD DRAWING
TYPE B COVERBOARD AND
BRACKET MOUNTING DETAILS

CONTRACT NO.	SCALE	DRAWING NO.	SHEET NO.
FQ-	NOT TO SCALE	ST-TW-CR-025	## of .

MOTT MACDONALD

FTA-FQ15192-MCAP-001
Potomac Yard Metrorail Station

Cut-Over Strategy

May 30, 2017

Mott MacDonald
4600 N. Fairfax Drive
Suite 806
Arlington VA 22203
United States of America

T +1 (571) 451 0950
F +1 (703) 807 0120
mottmac.com

FTA-FQ15192-MCAP-001
Potomac Yard Metrorail Station

Cut-Over Strategy

May 30, 2017

Issue and revision record

Revision	Date	Originator	Checker	Approver	Description
dv0.0	05/30/17	JE	WP	WP	Draft
dv0.1	05/30/17	JE	WP	WP	Update to comments

Document reference: C11 Cutover Plan-0.0-000000-dv0.1-053017

Information class: Standard

This document is issued for the party which commissioned it and for specific purposes connected with the above-captioned project only. It should not be relied upon by any other party or used for any other purpose.

We accept no responsibility for the consequences of this document being relied upon by any other party, or being used for any other purpose, or containing any error or omission which is due to an error or omission in data supplied to us by other parties.

This document contains confidential information and proprietary intellectual property. It should not be shown to other parties without consent from us and from the party which commissioned it.

Contents

Executive summary 1

1 Introduction 2

1.1 Objective 2

2 Overall Description 3

2.1 Prerequisites prior to Cutover 3

2.2 Overview of Cutover Phases 3

3 Cut-Over Schedule 5

3.1 Phase 2 – C1 Cutover Schedule (See Appendix A) 5

3.2 Phase 3 – C2 Cutover Schedule (See Appendix B) 5

4 Cut-Over Requirements 6

4.1 Single track Weekend testing requirements for C1 track 6

4.1.1 Operation After Cutover 6

4.2 Single track Weekend testing requirements for C2 track 6

4.2.1 Operation After Cutover 6

A. Phase 2 – Track 1 Swing and Cutover Schedule 8

B. Phase 3 – Track 2 Swing and Cutover Schedule 10

C. Cut-Over Staging 12

Executive summary

Introduction

The goal of the Potomac Yard Station Cutover Strategy is as follows:

- Identify the phases of the Cutover
- Identify the prerequisites prior to Cutover
- Provide detail of Cutover durations for each phase
- Provide details of the steps and procedures in each phase
- Safety requirements for each phase
- Post Cutover testing required
- Identify operational restrictions post cutover and prior to completion of all ATC testing.

Overview of Cutover Phases:

- Phase 1 – Construction of new station and track.
- Phase 2 – Track 1 Swing & Cutover – Weekend #1 single track on Track 2. After cutover, trains will run on track 1 manual block between C12 and C10 in the normal direction only.
- Phase 3 – Track 2 Swing & Cutover – Weekend #2 single track on Track 1. After cutover, trains will run on track 2 manual block between C10 and C12 in the normal direction only.
- Phase 4 – Completion of control line and safe brake testing during night time shutdowns.

Cutover schedule can be found in Appendix A for C1 Track and Appendix B for C2 Track. Cutover staging is summarized in Appendix C.

The schedule has been provided as guidance to WMATA for the planning of the phase 2 and phase 3 cutover. The schedule provides activities with durations and will require the successful contractor to provide a more detailed schedule to WMATA based on its allocation of resources.

Cutover requirements

As a minimum, the following tests must be performed prior to revenue service after each single track Weekend. Control Line (speed command) testing will only be necessary in the Normal direction prior to Monday revenue service. If time allows, the reverse Control Lines can be tested. Crossover testing will be performed after track C2 is cutover. Safe braking testing cannot be completed in one weekend cutover due to the amount of time this activity requires to undertake thorough testing.

1 Introduction

Contract FQ15192 mandates the construction of a new Potomac Yard Passenger Rail Station, to be built on the Metrorail's Yellow and Blue lines between existing (C12) Braddock Road Station and (C10) Ronald Reagan Washington National Airport Station. To avoid impact to revenue service, the new equipment will be brought online in phases, while maintaining the required existing functionality. After the new TCR at (C11) Potomac Yard Station is safety certified and placed into service, the equipment in the existing TCR will be removed.

The purpose of the Potomac Yard Station Cutover Strategy is to provide WMATA a high level examination of the integration and cutover of the new Automatic Train Control equipment under this contract.

All cutover strategies are developed with the intention of minimizing effects to revenue service and ensuring the safety of the overall system.

At this time, it is anticipated that only two single track weekends will be required for the entire cutover. Early outages will be requested as necessary.

1.1 Objective

The goal of the Potomac Yard Station Cutover Strategy is as follows:

- Identify the phases of the Cutover
- Identify the prerequisites prior to Cutover
- Provide detail of Cutover durations for each phase
- Provide details of the steps and procedures in each phase
- Safety requirements for each phase
- Post Cutover testing required
- Identify operational restrictions post cutover and prior to completion of all ATC testing.

2 Overall Description

This document describes the planned cutover of the new Potomac Yard Station (C11) TCR and wayside equipment into the existing system, and the retirement of the existing C11 TCR.

2.1 Prerequisites prior to Cutover

- The new TCR shall be fully installed, powered up and preliminary tests completed.
- Communication between the new TCR and C10,C12 and ROCC, via fiber Ethernet network will be established and verified.
- Installation of surface trenching, new cabling and junction boxes shall be complete.
- The new LED signal aspects shall be installed with aspects concealed.
- Installation of all Wayside equipment e.g. Bonds, signals, marker coils and signs (To be bagged)

2.2 Overview of Cutover Phases

The following is a generalized description of the cutover phases, including a brief assessment of impact to operations and ATCM responsibilities. Refer to drawing C11-Cutover sheet 1 to 4 for a more detailed list of ATC works required for each of the phase's.

- Phase 1 – Construction
    - Install new equipment in C11 TCR
    - Install all new wayside equipment in newly constructed track between limits 443+75 and 458+04
    - Install all new wayside equipment in existing track between limits 460+00 and 480+00
    - Install all new wayside equipment in existing track between limits 420+00 and 441+00
- Phase 2 – Track 1 Swing & Cutover
    - Trackwork – undertake track swing of existing C1 track into new C1 track
    - Cut in all ATC equipment on C1 track
    - Test all ATC equipment at C10, C11 and C12
    - Restore Power – Required for Control Line testing with train
    - Operations – When cutover is complete, revenue trains will run in manual mode on track C1 with absolute block between C12-04 signal and C10-26 signal until safe brake tests are complete. Revenue trains will pass through but will **NOT** service Potomac yard passenger station.
- Phase 3 – Track 2 Swing & Cutover
    - Trackwork – undertake track swing of existing C2 track into new C2 track

- Cut in all ATC equipment on C2 track
- Test all ATC equipment at C10, C11 and C12
- Restore Power – Required for Control Line testing with train
- Operations – When cutover is complete, revenue trains will run in manual mode on both tracks C1 and C2 with absolute block between C12 and C10 until safe brake tests are complete. Revenue trains will service Potomac yard passenger station.

- Phase IV – Completion of ATC System Testing
  ATC tests not completed in Phases 2&3 will be completed during night time single tracking operations and/or shutdowns.
  - Complete control line testing not completed during Phases 2&3.
  - Complete all safe brake testing.
  - Unclamp switches and place interlocking into full service.
  - Resume normal operation under cab signal control.

3 Cut-Over Schedule

The schedule has been provided as a guidance to WMATA for the planning of the phase 2 and phase 3 cutover. The schedule provides activities with durations and will require the successful contractor to provide a more detailed schedule to WMATA based on its allocation of resources.

3.1 Phase 2 – C1 Cutover Schedule (See Appendix A)

This schedule provides details for all high level activities required for the cutover of the new C1 track. The activities identified are :

- Track C1 Swing and Cutover (Trackwork Contractor)
- C1 track ATC Track change over and set up. (ATC Contractor)
- Traffic test in normal direction. (ATC Contractor)
- Traffic test in reverse direction. (ATC Contractor)
- Test Control Lines in normal direction. (ATC Contractor, Operations)
- Test control lines in reverse direction. (ATC Contractor, Operations)
- Safe braking testing. (ATC Contractor, Operations)

3.2 Phase 3 – C2 Cutover Schedule (See Appendix B)

This schedule provides details for all high level activities required for the cutover of the New C2 track. The activities identified are :

- Track C2 Swing and Cutover (Trackwork Contractor)
- C2 track ATC Track change over and set up. (ATC Contractor)
- Traffic test in normal direction. (ATC Contractor)
- Traffic test in reverse direction. (ATC Contractor)
- Test Control Lines in normal direction. (ATC Contractor, Operations)
- Test control lines in reverse direction. (ATC Contractor, Operations)
- Safe braking testing. (ATC Contractor, Operations)

4 Cut-Over Requirements

As a minimum, the following tests must be performed prior to revenue service after each single track Weekend. Control Line (speed command) testing will only be necessary in the Normal direction prior to Monday revenue service. If time allows, the reverse Control Lines can be tested. Crossover testing will be performed after track C2 is cutover. Safe braking testing cannot be completed in one weekend cutover due to the amount of time this activity requires to undertake thorough testing.

4.1 Single track Weekend testing requirements for C1 track

- All prerequisites as listed in section 2.1 to be completed prior to cutover of C1 track.
- Fencing to be erected between the running track C2 and the construction on C1 track for the safety of the working staff
- Installation and set up of all AF track circuits
- Track contractor to complete and hand over the C1 track free of shunting equipment so that ATC contractor can complete testing of two remaining AF tracks
- Testing of traffic in normal direction on C1 track
- Testing of traffic in reverse direction on C1 track (Dependent on available time)
- Testing of control lines in normal direction on C1track
- Testing of control lines in reverse direction on C1 track (Dependent on available time)
- Safe braking testing. (Dependent on available time)

4.1.1 Operation After Cutover

At cutover completion, trains will be restricted to manual block operation in normal direction only until night time ATC testing is completed. Trains will not stop at Potomac Yard Station.

4.2 Single track Weekend testing requirements for C2 track

- All prerequisites as listed in section 2.1 to be completed prior to cutover of C2 track
- Fencing to be erected between the running line C1 and the construction C2 track for the safety of the working staff
- Installation and set up of all AF track circuits
- Track contractor to complete and hand over the C2 track free of shunting equipment so that ATC engineers can complete testing of two remaining AF tracks
- Testing of traffic in normal direction on C2 track
- Testing of traffic in reverse direction on C2 track (Dependent on available time)
- Testing of control lines in normal direction on C2 track
- Testing of control lines in reverse direction on C2 track (Dependent on available time)
- Safe braking testing (Dependent on available time)

4.2.1 Operation After Cutover

At cutover completion, trains will be restricted to manual block operation in normal direction only until night time ATC testing is completed. Trains will begin stopping at Potomac Yard Station to board passengers.

Appendices

A. Phase 2 – Track 1 Swing and Cutover Schedule 8
B. Phase 3 – Track 2 Swing and Cutover Schedule 10
C. Cut-Over Staging 12

A. Phase 2 – Track 1 Swing and Cutover Schedule

ID		Task Mode	Task Name	Duration	Start	Finish
1			**Potomac Yard Station**	**7 days**	**Fri 26/05/17**	**Sun 28/05/17**
2			**Phase 2 - C1 Track Cut-Over**	**7 days**	**Fri 26/05/17**	**Sun 28/05/17**
3			**Phase 2 - Track 1 Swing & Cut-Over**	**3 days**	**Fri 26/05/17**	**Sat 27/05/17**
4			WMATA Phase 2 Track Swing	24 hrs	Fri 26/05/17	Sat 27/05/17
5			**Phase 2 - Connect and adjust Track 1 ATC**	**3.25 days**	**Fri 26/05/17**	**Sat 27/05/17**
6			C1-485	1 hr	Fri 26/05/17	Fri 26/05/17
7			C1-479	1 hr	Fri 26/05/17	Fri 26/05/17
8			C1-472	1 hr	Fri 26/05/17	Fri 26/05/17
9			C1-468	1 hr	Fri 26/05/17	Fri 26/05/17
10			C1-462	1 hr	Fri 26/05/17	Fri 26/05/17
11			C1-415	1 hr	Fri 26/05/17	Fri 26/05/17
12			C1-425	1 hr	Fri 26/05/17	Fri 26/05/17
13			C1-428	1 hr	Fri 26/05/17	Fri 26/05/17
14			C1-435	1 hr	Fri 26/05/17	Fri 26/05/17
15			C1-458	1 hr	Sat 27/05/17	Sat 27/05/17
16			C1-441	1 hr	Sat 27/05/17	Sat 27/05/17
17			**Phase 2 -Test Traffic ATC**	**1 day**	**Sat 27/05/17**	**Sat 27/05/17**
18			Test Traffic between C10 and C11	4 hrs	Sat 27/05/17	Sat 27/05/17
19			Test traffic between C11 and C12	4 hrs	Sat 27/05/17	Sat 27/05/17
20			**Phase 2 - Test control Lines ATC**	**1.5 days**	**Sat 27/05/17**	**Sun 28/05/17**
21			Test Control Line (Normal Direction)	6 hrs	Sat 27/05/17	Sat 27/05/17
22			Test Control Lines (Reverse Direction)	6 hrs	Sat 27/05/17	Sun 28/05/17
23			**Phase 2 - Safe Brake test**	**1.5 days**	**Sun 28/05/17**	**Sun 28/05/17**
24			Safe Brake test	12 hrs	Sun 28/05/17	Sun 28/05/17

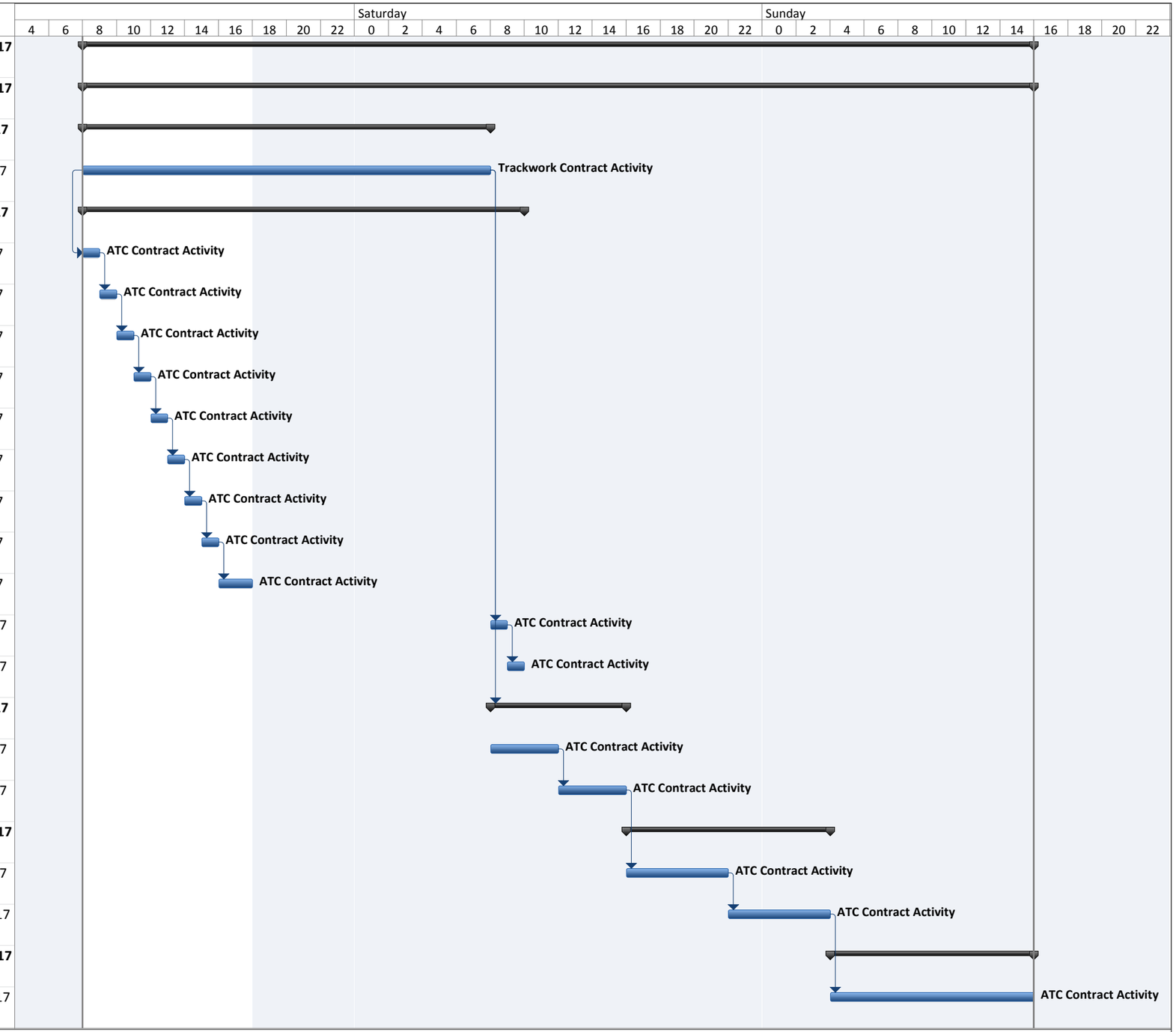

Project: Potomac Yard Station C1
Date: Thu 25/05/17

Task		Summary		External Milestone		Inactive Summary		Manual Summary Rollup		Finish-only	
Split		Project Summary		Inactive Task		Manual Task		Manual Summary		Deadline	
Milestone		External Tasks		Inactive Milestone		Duration-only		Start-only		Progress	

B. Phase 3 – Track 2 Swing and Cutover Schedule

ID	Task Mode	Task Name	Duration	Start	Finish
1		**Potomac Yard Station**	**7 days**	**Fri 02/06/17**	**Sun 04/06/17**
2		**Phase 3 - C2 Track Cut-Over**	**7 days**	**Fri 02/06/17**	**Sun 04/06/17**
3		**Phase 3 - Track 2 Swing & Cut-Over**	**3 days**	**Fri 02/06/17**	**Sat 03/06/17**
4		WMATA Phase 3 Track Swing	24 hrs	Fri 02/06/17	Sat 03/06/17
5		**Phase 3 - Connect and adjust Track 2 ATC**	**3.25 days**	**Fri 02/06/17**	**Sat 03/06/17**
6		C2-485	1 hr	Fri 02/06/17	Fri 02/06/17
7		C2-478	1 hr	Fri 02/06/17	Fri 02/06/17
8		C2-472	1 hr	Fri 02/06/17	Fri 02/06/17
9		C2-468	1 hr	Fri 02/06/17	Fri 02/06/17
10		C2-462	1 hr	Fri 02/06/17	Fri 02/06/17
11		C2-411	1 hr	Fri 02/06/17	Fri 02/06/17
12		C2-425	1 hr	Fri 02/06/17	Fri 02/06/17
13		C2-428	1 hr	Fri 02/06/17	Fri 02/06/17
14		C2-435	1 hr	Fri 02/06/17	Fri 02/06/17
15		C2-458	1 hr	Sat 03/06/17	Sat 03/06/17
16		C2-441	1 hr	Sat 03/06/17	Sat 03/06/17
17		**Phase 3 -Test Traffic ATC**	**1 day**	**Sat 03/06/17**	**Sat 03/06/17**
18		Test Traffic between C10 and C11	4 hrs	Sat 03/06/17	Sat 03/06/17
19		Test traffic between C11 and C12	4 hrs	Sat 03/06/17	Sat 03/06/17
20		**Phase 3 - Test control Lines ATC**	**1.5 days**	**Sat 03/06/17**	**Sun 04/06/17**
21		Test Control Line (Normal Direction)	6 hrs	Sat 03/06/17	Sat 03/06/17
22		Test Control Lines (Reverse Direction)	6 hrs	Sat 03/06/17	Sun 04/06/17
23		**Phase 3 - Safe Brake test**	**1.5 days**	**Sun 04/06/17**	**Sun 04/06/17**
24		Safe Brake test	12 hrs	Sun 04/06/17	Sun 04/06/17

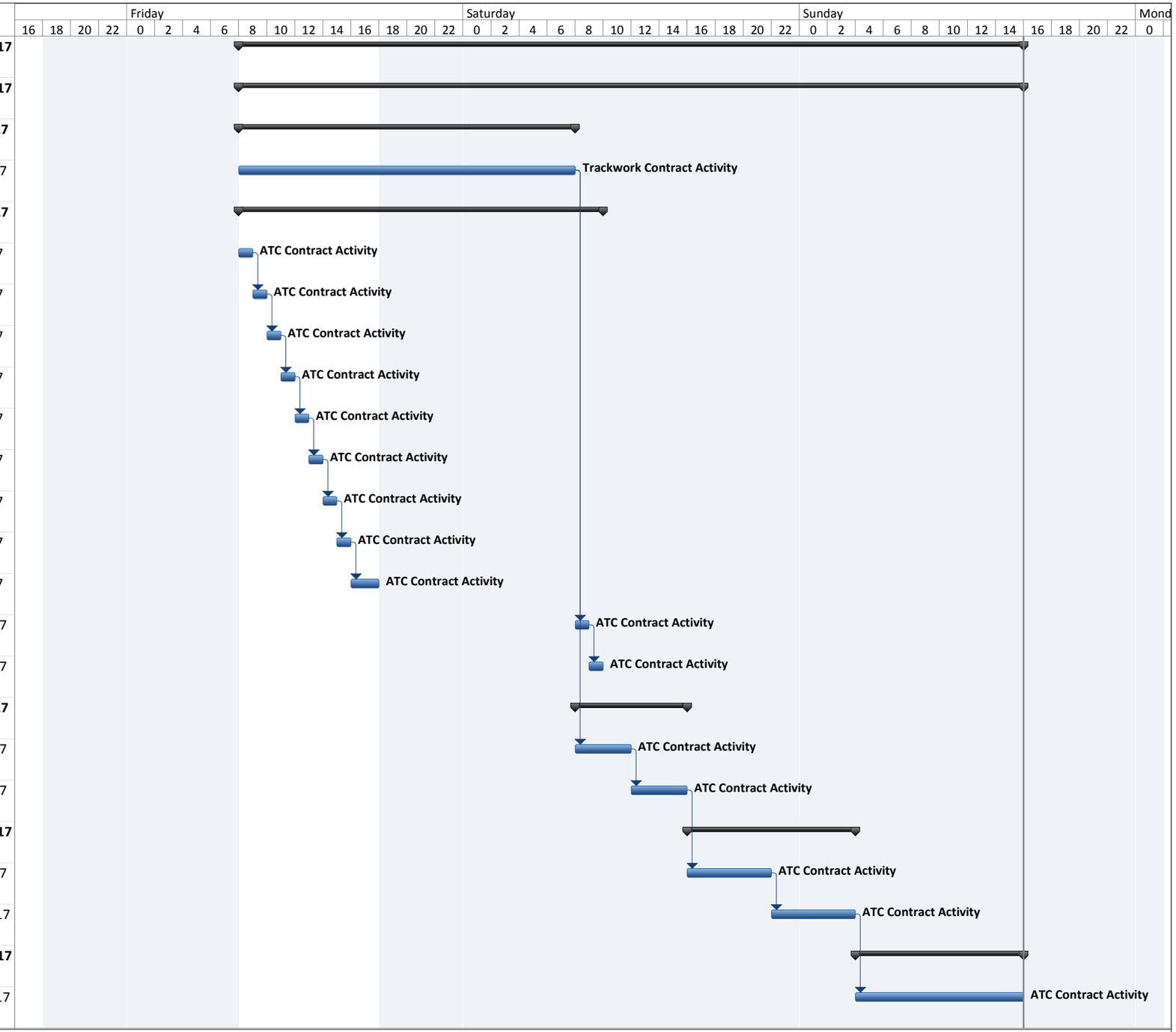

Project: Potomac Yard Station C2
Date: Thu 25/05/17

Task		Summary		External Milestone		Inactive Summary		Manual Summary Rollup		Finish-only	
Split		Project Summary		Inactive Task		Manual Task		Manual Summary		Deadline	
Milestone		External Tasks		Inactive Milestone		Duration-only		Start-only		Progress	

C. Cut-Over Staging

PRE-CONSTRUCTION (EXISTING)

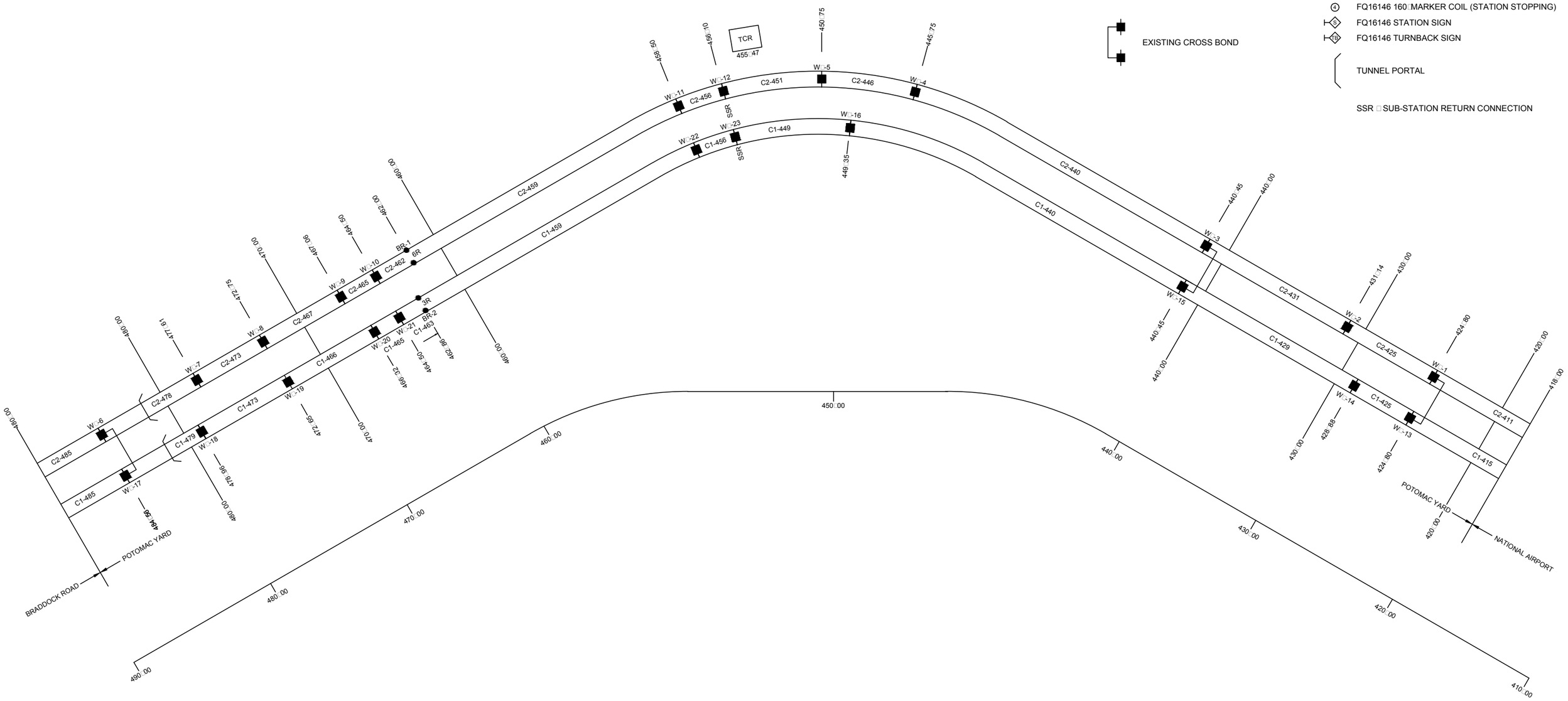

DESIGN	DATE	REVISIONS								
DRAWN	DATE	REV. NO.	DATE	BY	DESCRIPTION	REV. NO.	DATE	BY	DESCRIPTION	
CHECKED	DATE									
APPROVED	DATE									
APPROVED	DATE									

WASHINGTON METROPOLITAN AREA TRANSIT AUTHORITY

MOTT MACDONALD
Mott MacDonald
4600 N. Fairfa Drive
Suite 806
Arlington VA 22203
571-451-0955

SIGNAL AND TRACKWORK
PRE-CONSTRUCTION (EXISTING)

LOCATION: POTOMAC YARD STATION
AUTOMATIC TRAIN CONTROL

SCALE	DRAWING NO.	PAGE NO.
NONE	C11-	

PHASE 1 - CONSTRUCTION

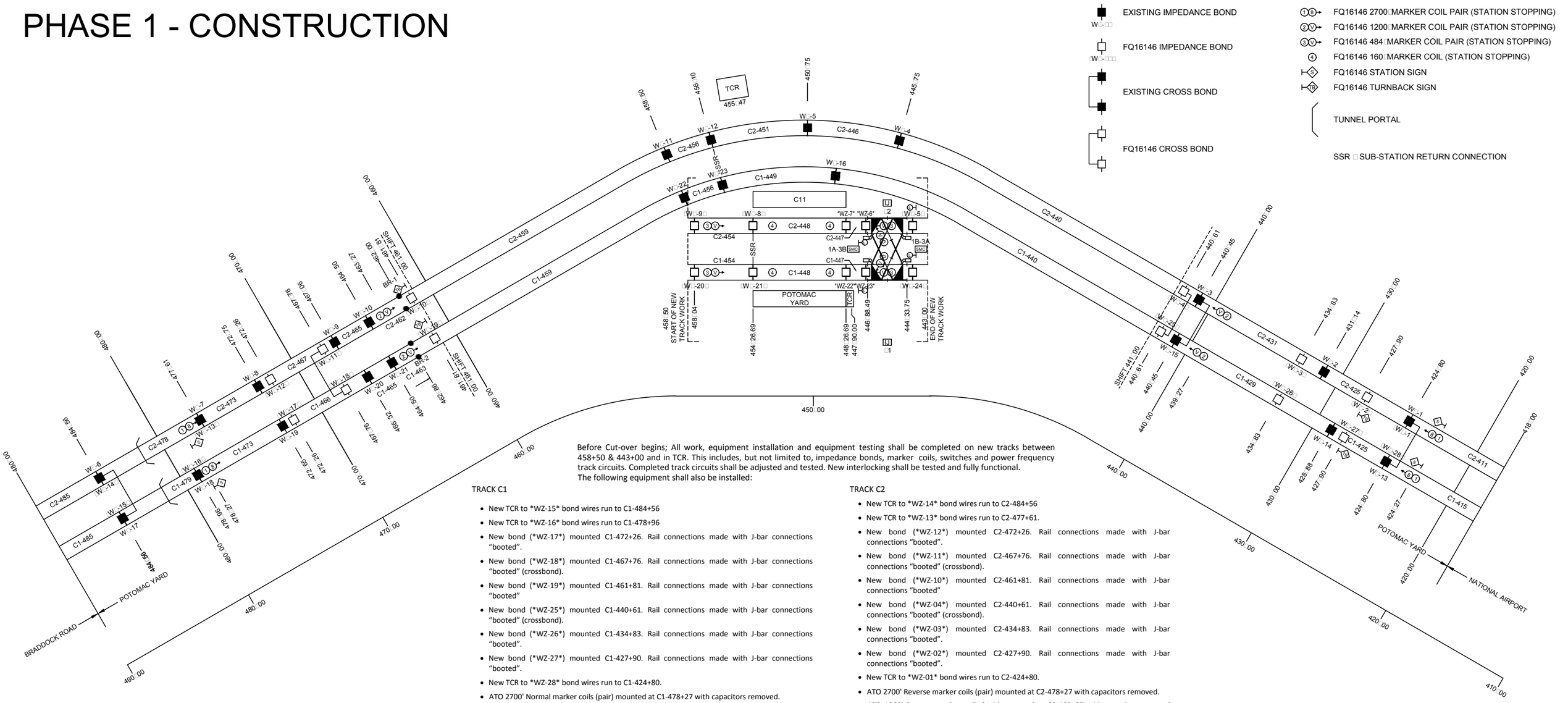

Before Cut-over begins; All work, equipment installation and equipment testing shall be completed on new tracks between 458+50 & 443+00 and in TCR. This includes, but not limited to, impedance bonds, marker coils, switches and power frequency track circuits. Completed track circuits shall be adjusted and tested. New interlocking shall be tested and fully functional.
The following equipment shall also be installed:

TRACK C1

- New TCR to *WZ-15* bond wires run to C1-484+56
- New TCR to *WZ-16* bond wires run to C1-478+96
- New bond (*WZ-17*) mounted C1-472+26. Rail connections made with J-bar connections "booted".
- New bond (*WZ-18*) mounted C1-467+76. Rail connections made with J-bar connections "booted" (crossbond).
- New bond (*WZ-19*) mounted C1-461+81. Rail connections made with J-bar connections "booted"
- New bond (*WZ-25*) mounted C1-440+61. Rail connections made with J-bar connections "booted" (crossbond).
- New bond (*WZ-26*) mounted C1-434+83. Rail connections made with J-bar connections "booted".
- New bond (*WZ-27*) mounted C1-427+90. Rail connections made with J-bar connections "booted".
- New TCR to *WZ-28* bond wires run to C1-424+80.
- ATO 2700' Normal marker coils (pair) mounted at C1-478+27 with capacitors removed.
- ATO 1200' Normal marker coils (pair) mounted at C1-463+27 with capacitor removed and variable unit disconnected.
- ATO 1200' Reverse marker coils (pair) mounted at C1-439+27 with capacitor removed and variable unit disconnected.
- ATO 2700' Reverse marker coils (pair) mounted at C1-424+27 with capacitors removed.
- ATO 2700' Normal "S" sign mounting pole installed at C1-478+27.
- ATO 2700' Reverse "S" sign mounting pole installed at C1-424+27.
- Turnback 10 sign mounting pole installed at C1-461+81.
- Turnback 20 sign mounting pole installed at C1-427+90.

TRACK C2

- New TCR to *WZ-14* bond wires run to C2-484+56
- New TCR to *WZ-13* bond wires run to C2-477+61.
- New bond (*WZ-12*) mounted C2-472+26. Rail connections made with J-bar connections "booted".
- New bond (*WZ-11*) mounted C2-467+76. Rail connections made with J-bar connections "booted" (crossbond).
- New bond (*WZ-10*) mounted C2-461+81. Rail connections made with J-bar connections "booted"
- New bond (*WZ-04*) mounted C2-440+61. Rail connections made with J-bar connections "booted" (crossbond).
- New bond (*WZ-03*) mounted C2-434+83. Rail connections made with J-bar connections "booted".
- New bond (*WZ-02*) mounted C2-427+90. Rail connections made with J-bar connections "booted".
- New TCR to *WZ-01* bond wires run to C2-424+80.
- ATO 2700' Reverse marker coils (pair) mounted at C2-478+27 with capacitors removed.
- ATO 1200' Reverse marker coils (pair) mounted at C2-463+27 with capacitor removed and variable unit disconnected.
- ATO 1200' Normal marker coils (pair) mounted at C2-439+27 with capacitor removed and variable unit disconnected.
- ATO 2700' Normal marker coils (pair) mounted at C2-424+27 with capacitors removed.
- ATO 2700' Reverse "S" sign mounting pole installed at C2-478+27.
- ATO 2700' Normal "S" sign mounting pole installed at C2-424+27.
- Turnback 14 sign mounting pole installed at C2-461+81.
- Turnback 24 sign mounting pole installed at C2-427+90.

NOTE:

This cut-over plan is an example to be used for planning purposes. Actual cut-over plan shall be prepared by contractor based on contractor's final design.

DESIGN	DATE	REVISIONS							
DRAWN	DATE	REV. NO.	DATE	BY	DESCRIPTION	REV. NO.	DATE	BY	DESCRIPTION
CHECKED	DATE								
APPROVED	DATE								
APPROVED	DATE								

WASHINGTON METROPOLITAN AREA TRANSIT AUTHORITY

MOTT MACDONALD

Mott MacDonald
4600 N. Fairfa Drive
Suite 806
Arlington VA 22203
571-451-0955

SIGNAL AND TRACKWORK
CONSTRUCTION COMPLETE PRE-CUTOVER

LOCATION: POTOMAC YARD STATION
AUTOMATIC TRAIN CONTROL

SCALE	DRAWING NO.	PAGE NO.
NONE	C11-	

PHASE 2 - TRACK 1 SWING & CUT-OVER

To be accomplished during a wee□end single trac□operation.

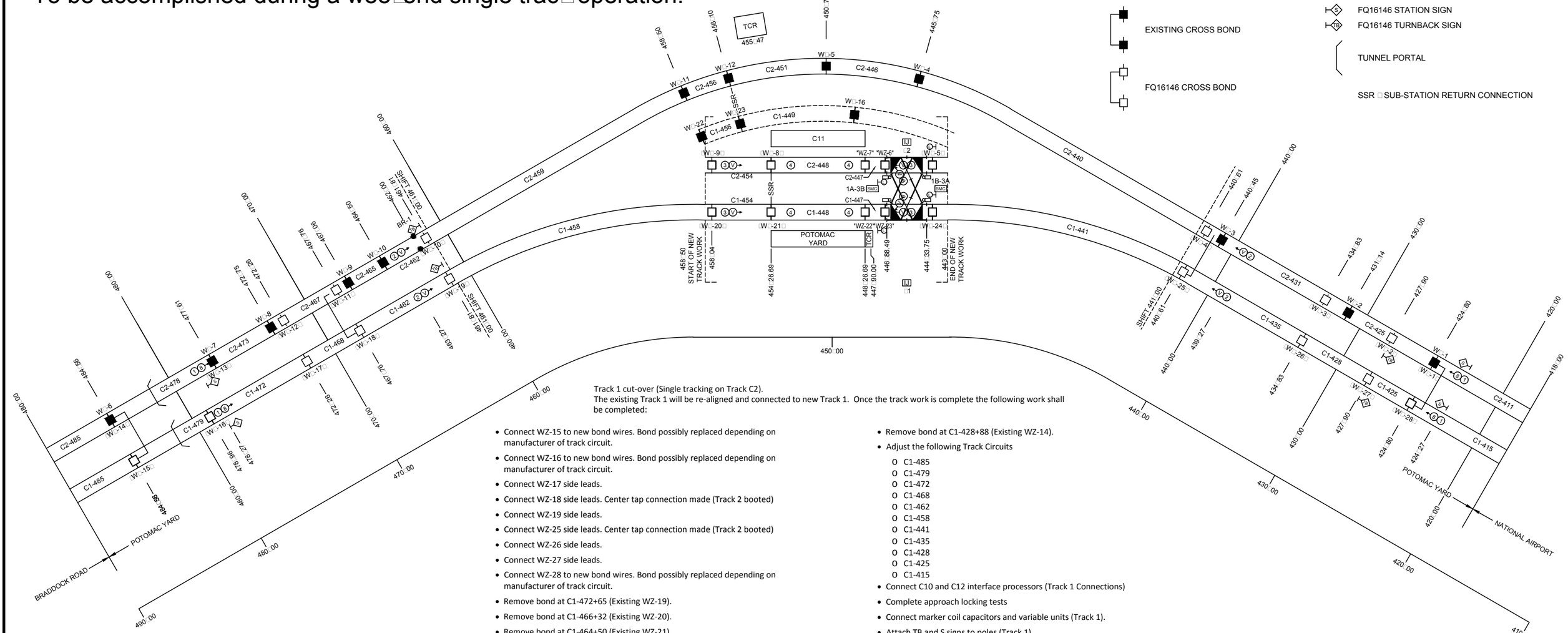

Track 1 cut-over (Single tracking on Track C2).
The existing Track 1 will be re-aligned and connected to new Track 1. Once the track work is complete the following work shall be completed:

- Connect WZ-15 to new bond wires. Bond possibly replaced depending on manufacturer of track circuit.
- Connect WZ-16 to new bond wires. Bond possibly replaced depending on manufacturer of track circuit.
- Connect WZ-17 side leads.
- Connect WZ-18 side leads. Center tap connection made (Track 2 booted)
- Connect WZ-19 side leads.
- Connect WZ-25 side leads. Center tap connection made (Track 2 booted)
- Connect WZ-26 side leads.
- Connect WZ-27 side leads.
- Connect WZ-28 to new bond wires. Bond possibly replaced depending on manufacturer of track circuit.
- Remove bond at C1-472+65 (Existing WZ-19).
- Remove bond at C1-466+32 (Existing WZ-20).
- Remove bond at C1-464+50 (Existing WZ-21).
- Remove Pin bonds at C1-462+86 (Existing BR-2).
- Remove bond at C1-458+50 (Existing WZ-22).
- Remove bond at C1-440+45 (Existing WZ-15).
- Remove bond at C1-428+88 (Existing WZ-14).
- Remove bond at C1-428+88 (Existing WZ-14).
- Adjust the following Track Circuits
  - C1-485
  - C1-479
  - C1-472
  - C1-468
  - C1-462
  - C1-458
  - C1-441
  - C1-435
  - C1-428
  - C1-425
  - C1-415
- Connect C10 and C12 interface processors (Track 1 Connections)
- Complete approach locking tests
- Connect marker coil capacitors and variable units (Track 1).
- Attach TB and S signs to poles (Track 1).
- Traffic Testing
- Control line testing

Safe braking testing can continue throughout the week during non revenue hours or with single tracking on Track 2.

When cut-over is complete, revenue trains will run in manual mode on track C1 with an absolute block between C12-04 signal and C10-26 signal until safe braking tests are complete. Revenue trains will **NOT** service Potomac Yard passenger station.

NOTE:

This cut-over plan is an example to be used for planning purposes. Actual cut-over plan shall be prepared by contractor based on contractor's final design.

DESIGN	DATE	REVISIONS							
DRAWN	DATE	REV. NO.	DATE	BY	DESCRIPTION	REV. NO.	DATE	BY	DESCRIPTION
CHECKED	DATE								
APPROVED	DATE								
APPROVED	DATE								

WASHINGTON METROPOLITAN AREA TRANSIT AUTHORITY

MOTT MACDONALD
Mott MacDonald
4600 N. Fairfa□ Drive
Suite 806
Arlington VA 22203
571-451-0955

SIGNAL AND TRACK WORK
TRACK 1 CUT-OVER

LOCATION: POTOMAC YARD STATION
AUTOMATIC TRAIN CONTROL

SCALE	DRAWING NO.	PAGE NO.
NONE	C11-	

mottmac.com

WMATA MANUAL OF DESIGN CRITERIA
PREFACE

The Chief Engineer is pleased to endorse this updated version of the Washington Metropolitan Area Transit Authority (WMATA), WMATA Manual of Design Criteria. This manual establishes the engineering design criteria for WMATA's Facilities and Systems .

Authorized:

Chief Engineer Infrastructure Services

R. Louis Viner, Jr.

WMATA MANUAL OF DESIGN CRITERIA
FOR MAINTAINING AND CONTINUED OPERATION OF FACILITIES

SUMMARY OF CHANGES FOR RELEASE 9, revision 3

RECOMMENDED FOR DEPUTY CHIEF ENGINEER APPROVAL			
Position	Name	Seal / Signature	Date
Deputy Chief Communication & Network Systems	Marshall S. Epler	STATE OF MARYLAND MARSHALL S. EPLER 37903 PROFESSIONAL ENGINEER	10/20/15
Deputy Chief Power Systems Engineering	Ashton W. Robinsion	STATE OF MARYLAND ASHTON W. ROBINSON 32300 PROFESSIONAL ENGINEER	10/20/2015
Deputy Chief Track, Structures and Facilities	Thomas R. Robinson	COMMONWEALTH OF VIRGINIA 0402020098 THOMAS RICHARD ROBINSON JR Lic. No. 0402020098 PROFESSIONAL ENGINEER	4-27-17
Deputy Chief Automatic Train Control	Nicholas J. Croce	COMMONWEALTH OF VIRGINIA 052491 (PE) NICHOLAS J CROCE III Lic. No. 052491 PROFESSIONAL ENGINEER	10/21/2015

Section	Description	Summary of Changes
1	Modification	A total restructure /rewrite of this section
2.3.13	Modification	Add fire protection service system for parking structure elevator
3	Modification	General: Section is rewritten and reformatted. Some new information added and old information deleted. Remove station graphics / signage discussion and reference Metro Rail System Signage Design Manual
3.1.1	Addition	Added regulatory requirements
3.1.2	Addition	Added security requirements
3.2.5.1	Addition	Added room grouping for reduced HVAC requirements
3.2.10	Modification	Reformat and reorder this section and all subsections
3.3	Modification	Reformat and update with additions and deletions
3.4.3.1.1	Modification	Reference Standard Drawings and delete shelter discussion
3.5	Addition	Add wayside facilities
3.2.9.1	Modification	Add two escalators between changes in elevation
3.2.20	Addition	Minimum size machine rooms
4	Modification	General: Section is rewritten and reformatted. Some new information added and old information deleted.
6.1.4	New Section	Add Bus Facility Maintainability and Constructability requirements
8.12.1.1	Deletion	Remove reference to UMTA metric conversion plan
8.12.2.1	Addition	Add Dulles Route
8.13.6	Addition	Add Communications and Cable TV

9.1.1	Modification	Update Policy
9.3.10	Addition	Add access easement definition
9.4.5	Modification	Updated Property Surveys in the District of Columbia sections
9.4.6	Modification	Updated Property Surveys in Maryland and Virginia sections
9.4.7	Modification	Updated Plat of Survey Requirements sections
9.5.5	Modification	Updated definition of lower limit
11.1.1	Addition	New section Minimum Criteria
11.2	Modification	Updated Survey Control sections
11.4	Modification / Addition	Updated and added new Horizontal Alignment sections
11.5	Modification / Addition	Updated and added new Curvature sections
11.6	Modification / Addition	Updated, rearranged and added new Superelevation sections
11.7	Modification	Updated Vertical Alignment section
11.8	Modification	Updated and added new Trackwork sections
11.10	Modification	Updated Contact Rail sections
11.11	Modification	Updated Clearances sections
12.1	Modification	Updated General section
12.4	Modification	Updated wetland mitigation section
12.5	Modification	Updated Flood Plains sections
12.6	Addition	Added Loudoun County Va.
12.8	Modification	Updated Tree Conservation & Sewers and Drainage sections
12.9	Addition	Added Stormwater Management requirement

12.11	Modification	Updated Water sections
12.13	Modification	Updated Elect subsections
12.14	Addition	Added Cable TV to Telephone
12.18	Addition	Added protective structure to Utilities Crossings of Metro section
12.19	Modification	Update Soil and Erosion and Sediment Control requirements
12.21	Modification	Update Design Criteria - General section
13	Summary	SECTION 13 of the Design Criteria was revised to address Auxiliary (AC) Power requirements. All references to Traction Power and SCADA related items were transferred to SECTION 23 and 28 of the Design Criteria respectively. SECTION 13 was also reorganized for better clarity and new areas added to address new technologies, new standards, and lesson learn from previous Contracts.
13.1	General	Revised section to add the need for design work to be safe, reliable, and energy efficient.
13.2	Responsibility	New section added to define responsibility.
13.3	Coordination	New section added to emphasize coordination between the various relevant disciplines.
13.4	General Illumination Levels	Replace all high pressure sodium lamps with metal halide.
13.6	Technical Specifications	New section added to clarify the relationship between specifications and the Design Criteria.
13.7	Design Drawings and Submission Requirements	New section added stating the requirements of submitted drawings.
13.8	CAD Standard	New section that references WMATA's CAD standard
13.9	Sequence of Electrical Drawings	New section added that states the design drawings sequencing.

13.10	Calculations	New section added requiring calculations in support of submitted design drawings.
13.13.3	Remote Monitoring	New section added
13.14.2.4.6	Breaker Operation	Corrected “LPC” to “PLC”
13.14.2.5	Digital Power Metering System	Revised to show digital power metering on the medium voltage switchgear as oppose to the low voltage switchgear.
13.14.2.6	Quick Connect System	Section was revised to reflect operations changes. Generator was changed from 100kW to 500kW and corresponding breaker was changed from 100A to 800A.
13.15.4	LED	New table added to incorporate LED lights
13.15.14	Load Classification	Section was revised to reflect operations changes. Generator was changed from 100kW to 500kW and corresponding breaker was changed from 100A to 800A.
13.15.19	Emergency Power System	Removed the provision for 50kVA UPS and added provisions for the use of 75kVA and 100kVA UPSs.
13.15.22.1	Material and Insulation	Revised section to clarify the acceptable use of low-smoke cables.
13.17.6.2	Interior Lighting	Revised section to add LEDs
13.18	Electric	New section added to address commercial/office building requirements.
14.2.4	Update	Plumbing design based on International Plumbing Code
14.3.1.1	Modification	Mods to subway tunnel ventilation system analysis
14.3.6.3	Modification	New tunnel fans to meet current version of NFPA 130
14.3.7	Modification	Mod to friction loss formula
14.3.8	Modification	Change location of air compressor and treat compressed air

14.3.12.6	Modification	Damper control
14.3.16	Update	Add SCADA requirement
14.4.1	Modification	Added room grouping for reduced HVAC requirements
14.4.2.1	Addition	Add PLC for fan control and add ventilation requirements
14.4.2.3	Modification	Battery Room ventilation based on concentration not room size
14.4.2.4	Modification	Heat loads based on equipment within room.
14.4.2.8	Modification	Add PLC for fan control and add ventilation requirements
14.4.2.9	Modification	Add PLC for fan control and add ventilation requirements
14.4.4	Delete	Remove and renumber remaining sections
14.5	Update	Heating requirements updated. Added room grouping for reduced HVAC requirements
14.6.7	Update	Specify chiller plant space requirements, room sizes, equipment and equipment clearance
14.6.7.3.1	New Section	Water meter remote monitoring
14.6.7.4 14.6.7.5 14.6.7.6	Delete	Remove and renumber remaining sections
14.6.13	Delete	Remove and renumber remaining sections
14.8.2	Update	Escalator and Elevator sump remote monitoring
14.8.6	Update	Provide velocity formula
14.8.9	Update	Update wet well and dry well requirements for pumping stations
14.11	Update	Escalators: update code requirements, number of escalators, class rise, class steps, clearance, controls, working temperature and pit access.

14.13	Update	Fire Protection standpipe system
14.14.7	Update	Sewage ejector system pumping / pneumatic
14.17	Update	Elevators:
14.18	Modification	Add access requirements
14.18.1	Modification	Add access requirements
14.18.2.1	Delete	Remove and renumber remaining sections
14.18.2.3	Addition	Add access requirements
14.18.2.5	Modification	Add clearance criteria
14.18.2.6	Modification	Add clearance criteria
14.18.2.7	Delete	Remove and renumber remaining sections
14.18.2.10	New Section	Add roof access requirements for mechanical equipment
14.20	Addition	Added Legacy DTS Control Functions
15.1, 15.2.1.1, 15.2.1.2, 15.2.1.7, 15.2.1.11, 15.2.2,15.2.2.1, 15.2.2.2, 15.3.2.7.1, 15.4, 15.20.2.4, 15.20.2.5,	Editorial Corrections	
15.1.4	New Section	To specify and be specific of WMATA requirement
15.2.1.3	IBC	To include local amendments
15.2.1.4.2	Addition	To specify and be specific of WMATA requirement
15.2.2.4	Addition	To specify and be specific of WMATA requirement
15.3.2.6.2	Modification	Revised and added for clarity

15.3.2.13	New Section	Added a minimum roof live load requirement
15.3.2.14	New Section	Specified the basic wind speed for consistency in the Design Criteria
15.3.7.1	Modification	To make a mandatory requirement and to clarify the application of loads
15.3.7.4	Addition	To specify and be specific of WMATA requirement
15.3.7.6	New Section	To specify and be specific of WMATA requirement
15.4.2.4.1	Modification	Revised and added to clarify
15.4.2.4.1.1	Modification	New/ Retaining wall shear key and waterproofing
15.4.2.4.2.4	Modification	Revised/ Retaining wall allowable soil pressure and settlement
15.5.1.1.2	Modification	Added to clarify
15.5.1.2.2.1	Modification	To correct the reference
15.5.1.2.3.1.1.1.1	Modification	Added to clarify
15.5.1.2.3.1.1.3	Delete	
15.5.1.2.7	Modification	Revised the wind velocity to 3-Second Gust equivalent basic wind speed
15.5.1.2.7.1.2	Modification	Revised/ Aerial structure transverse wind load
15.5.1.2.7.3	New Section	To specify the lower limit on the results of wind tunnel testing
15.5.1.2.9.1.1.5	New Section	3" max. allowable rail break
15.5.1.2.9.1.2.2	Modification	Clarification
15.5.1.2.9.1.2.3	Modification	Clarification
15.5.1.3.1	Modification	Revision for improving performance

15.5.1.4.1.3	New Section	Track box girder access
15.5.1.4.5.1.3	New Section	Concrete Rail Plinths
15.5.1.4.5.2	New Section	Track box girder access
15.5.1.4.7.3	Modification	Added to clarify
15.5.1.5.1	Delete	
15.5.1.5.4.1	Modification	Revision for improving performance
15.5.1.5.4.3	Modification	Revision for improving performance
15.5.1.7.3.2.3.3	New Section	Cassion foundation
15.5.1.7.3.3	New Section	Rammed aggregate pier foundation
15.5.1.8.6	New Section	Aerial structural bearing anchor bolt
15.5.1.8.7	New Section	Aerial structural bearing pad
15.5.1.9.1.4	Modification	Revision for improving performance
15.8.1.3.5	New Section	Structural steel design
15.9.3.3.2	New Section	Concrete Design
15.9.3.3.3	New Section	Concrete Design
15.9.3.3.1.2.1	Modification	Correct reference
15.9.3.3.1.2.3	Modification	Revision for improving performance
15.9.3.3.1.2.4	New Section	Allowable tensile stress
15.9.3.3.1.3.3	Delete	
15.18.1.3	New Section	Underground station wind load
15.20.1	Modification	To make a mandatory requirement and to clarify the application of locations
15.20.2.1	Modification	Underground facilities waterproofing
15.20.3	New Section	To specify and be specific of WMATA requirement

15.20.3.1	New Section	To specify and be specific of WMATA requirement
15.20.3.2	New Section	To specify and be specific of WMATA requirement
15.21.1.1.1.1	Modification	Revision for improving performance
15.21.1.1.2	Modification	Revision for improving performance
15.21.1.1.6.1	Modification	Adjusted for consistency
15.21.1.1.7.1	Modification	Added to clarify
15.21.1.1.7.2	Modification	Added to clarify
15.21.1.2.2	Modification	Revision
15.21.5.1	Modification	Revision for improving the performance
15.21.13	Delete	
15.21.16	New Section	Double Tees expansion joint
15.21.17	Modification	For clarification
16	Modification	All paragraphs except 16.1 have been renumbered and updated to reflect current criteria.
17.3	Modification	Address clearance issues for stub end storage tracks and bumping posts
23	General	Added negative rail potential limits Defined voltage drops for normal, abnormal, and emergency outage conditions Rail car data revised with addition of new rail car performance curve for simulation Clarified DC Switchgear insulation pad Removed cross-bonding at TBS coverage Removed 40w/lf rating of heat tape Added new section for Service and Inspection Yards
25.1.4.1.2	Modification	Train Control System functions DTS update

25.1.4.1.4.1	Modification	RTU Connection update
25.1.4.1.4.2.1	Modification	Communications System connection update. Delete
25.1.4.1.4.2.2	Delete	
25.1.4.1.4.3	Delete	Ancillary Facilities
25.1.4.1.4.5	Delete	DTS Junction Box Wiring Diagrams Section
25.1.4.4.2 25.1.4.4.2.1 25.1.4.4.2.2 25.1.4.4.2.3	Delete	Drawing Editor Systems Sections
25.1.4.5, 25.1.4.5.1, 25.1.4.5.2	Delete	TC Maintenance Telephone System Sections
25.1.5.3	Delete	Inclement Weather Operation
25.1.5.8	New	Added description for ATAWS
25.1.7	Delete	ATC Systems Integration
25.2.2.1.3.3	New	Added title for section “Special Trackwork Speed Command Transmission”
25.2.2.4 25.2.2.4.1 25.2.2.4.2 25.2.2.4.3 25.2.2.5 25.2.2.6 25.2.2.7 25.2.2.8 25.2.2.9 25.2.2.10 25.2.2.11	New	Added section entitled “Rail Operations Control Center (OCC) Overview” and subsections
25.5.2	Delete	Table II, Table IV and Table V
26.2.1	Modification	Update video interface
26.2.2.1.4	Modification	Update to reflect current use
26.2.3.3	Modification	Update to reflect current use

27	General	Reduce and renumber the section paragraphs
27.1.1	Modification	Revised note at end of section
27.1.3	Modification	Revised emergency panelboard
27.1.6	Deletion	Removed security provisions section
27.2.3	Modification	Updated Major System Components section
27.2.8	Modification	Added note to Intercoms section
27.3	New	Added Call-For-Aid System section
27.4	Modification	Updated the Information Display Systems sections
27.5	Modification	Updated the Fire Detection and Alarm System sections
27.6	Modification	Updated Access Control System sections
27.7	Modification	Updated Intrusion Detection and Alarm System sections
27.8	Modification	Updated Video Surveillance System sections
27.9	Modification	Updated Land Mobile Radio System sections
27.10	Modification	Undated Kiosk System sections
27.11	New	Added CNG Detection sections
27.12	Modification	Updated Operations Control Center Communications sections
28	SCADA	Added new section to address Supervisory Control and Data Acquisition (SCADA). SCADA systems provide control and monitoring of the electrical and mechanical equipment and systems serving the mission critical loads.

1. **TITLE: CORE *WAN SYSTEM***

2. **GENERAL DESCRIPTION & FUNCTIONALITY***: Describes system and its functionality along with a list of attributes and subsystems.*
   a. *The WMATA LAN/WAN System (Metronet) is a network that provides connectivity to all WMATA business systems requiring IP connectivity. The Metronet architecture is essentially a hub-and-spoke configuration with all Rail Stations dual connected back to the core through head-end routers. These head-end routers are strategically located throughout the network, where they provide interconnectivity between the stations and the core. The network core at all times consists of redundant Service Provider grade routers dedicated to high speed switching of packets traversing the Metronet Network. These core routers are responsible for establishing and managing control plane connectivity of all routers/switches connecting into the core in addition to their primary function of high speed packet forwarding.*

3. **SYSTEM COMPONENTS:**
   a. **Integrated Chassis:**
      i. *6U – 8U Form factor chassis*
      ii. *Redundant switch fabric*
      iii. *Redundant Route Switch Processors/Route Engine or Supervisor Engine Cards*
      iv. *Redundant Power Supplies*

   b. **Line Cards:**
      i. *10 GigabitEthernet Line cards*
      ii. *1 GigabitEthernet line cards.* **.**

   c. **Software:**
      i. *IPV4/IPV6 (dual stack) capabilities*
      ii. *Layer 3 protocols BGP/OSPF/LDP/MPLS*
      iii. *Layer 2 protocols such as LLDP/CDP*
      iv. *Multicast capability to include support for protocols like PIM-SM, PIM-SSM*
      v. *QOS capabilities to include DSCP, MPLS EXP among others.*
      vi. *Support for SNMP, NETFLOW and common logging frameworks*
      vii. *Must support secure access through the use of encrypted sessions in combination with security servers such as TACAC+, RADIUS*

4. **INSTALLATION:** *A brief description of each installation procedure to complete the system.*
   a. *All equipment must be properly grounded according to manufacturer's instructions.*
   b. *All cabling, must be routed through the appropriate patch panels, terminations blocks and cross connect and patching media. Equipment should not be patched directly into any network equipment without first landing on a patch panel or similar cable aggregating equipment.*
   c. *All cabling installed to support this system must be labeled according to the WMATA IT/NCS latest standards and practices.*
   d. *Identification and documentation of rack elevations showing the installation position of core device within its host rack.*

e. *All Core device must draw power from independent power sources to facilitate power redundancy.*
f. *All Core Devices must be appropriately named according to WMATA IT/NCS standards and labels must reflect the device name.*
g. *All port assignments must be identified and documented in a manner that associates every local port to its remote connection.*
h. *All core devices will be programmed with configuration vetted and approved by WMATA IT/NCS.*

1. **TITLE: EDGE *LAN/WAN SYSTEM***

2. **GENERAL DESCRIPTION & FUNCTIONALAITY***: Describes system and its functionality along with a list of attributes and subsystems.*
   a. *Connectivity at the edge is provided by a WMATA certified Router/Switch located in the Communications Room (Comm Room) for each station, running industry standard protocols that facilitate network transport for different business applications. It is important to note that the rooms that house our WAN Edge equipment are typically small with limited rack space, limited power, temperatures typically 80-110 degrees Fahrenheit, and collects a great deal of particulates due to its proximity to the trains. The WAN Edge devices provide for aggregation of fiber and copper media for local Layer 2 devices and various host devices.*

3. **SYSTEM COMPONENTS:**
   a. **Integrated Chassis:**
      I. *6U – 8U Form factor chassis*
      II. *Redundant Route Switch Processors/Route Engine or Supervisor Engine Cards*
      III. *Redundant Switch fabric*
      IV. *Redundant Power Supplies*

   b. **Line Cards:**
      I. *10 Gigabit Ethernet Line cards*
      II. *1 GigabitEthernet line cards with port density capabilities at a minimum of 40 I GigE ports.*

   c. **Software:**
      I. *IPV4/IPV6 (dual stack) capabilities*
      II. *Layer 3 protocols BGP/OSPF/LDP/MPLS*
      III. *Layer 2 protocols such as LLDP/CDP, RSTP,VLAN, 802.1Q, LACP*
      IV. *Multicast capability to include support for protocols like PIM-SM, PIM-SSM*
      V. *QOS capabilities to include DSCP, MPLS EXP among others.*
      VI. *Support for SNMP, NETFLOW and common logging frameworks*
      VII. *Must support secure access through the use of encrypted sessions in combination with security servers such as TACAC+, RADIUS.*
      VIII. *Interoperability with existing IT Standard L2 equipment using 802.1q and LACP.*

4. **INSTALLATION:** *A brief description of each installation procedure to complete the system.*
    a. *All equipment must be properly grounded according to manufacturer's instructions.*
    b. *All cabling, must be routed through the appropriate patch panels, terminations blocks and cross connect and patching media. Equipment should not be patched directly into any network equipment without first landing on a patch panel or similar cable aggregating equipment.*
    c. *All cabling installed to support this system must be labeled according to the WMATA IT/NCS latest standards and practices.*
    d. *Identification and documentation of rack elevations showing the installation position of core device within its host rack.*
    e. *All Edge WAN devices must draw power from independent power sources to facilitate power redundancy.*
    f. *All Edge WAN devices must be appropriately named according to WMATA IT/NCS standards and labels must reflect the device name.*
    g. *All port assignments must be identified and documented in a manner that associates every local port to its remote connection.*
    h. *All Edge WAN devices will be programmed with configuration vetted and approved by WMATA IT/NCS.*

1. **TITLE: EDGE *LAN SYSTEM NON-RUGGEDIZED***

2. **GENERAL DESCRIPTION & FUNCTIONALAITY***: Describes system and its functionality along with a list of attributes and subsystems.*
    a. *Layer 2 switch platforms in Metronet come in two categories and 2 primary port densities. A switch could be either a non-ruggedized or ruggedized platform, and a switch could either be a 24 or 48 port switch depending on where it is required and the pre-determine port density required. All switches must run current code to include all required layer 2 functionalities to be defined in the functional requirement document. Where applicable IP routing codes may be required for switches. In this instance the switch must come with advanced IP license to allow routing. No more than 2 switches can be daisy chained. A requirement of more than 2 switches will require a stack solution*

3. **SYSTEM COMPONENTS:**
    a. **Form Factor:**
        I. *1U Form factor chassis*
        II. *24 10/100/1000 POE Ports or 48 10/100/1000 POE Ports*
        III. *2 10GigabitEthernet ports*
        IV. *Redundant Power Supplies*
        V. *Stack configuration where multiple switches are required (More than 2)*

b. **Software:**

I. *IPV4/IPV6 (dual stack) capabilities*
II. *Layer 2 protocols such as LLDP/CDP, RSTP,VLAN, 802.1Q, LACP*
III. *Multicast capability to include support for protocols like IGMPV2 and IGMPv3*
IV. *QOS capabilities to include DSCP, COS among others.*
V. *Support for SNMP, NETFLOW and common logging frameworks*
VI. *Must support secure access through the use of encrypted sessions in combination with security servers such as TACAC+, RADIUS?*
VII. *Interoperability with existing L2 equipment using 802.1q and LACP.*

4. **INSTALLATION:** *A brief description of each installation procedure to complete the system.*

a. *All equipment must be properly grounded according to manufacturer's instructions.*
b. *All cabling, must be routed through the appropriate patch panels, terminations blocks and cross connect and patching media. Equipment should not be patched directly into any network equipment without first landing on a patch panel or similar cable aggregating equipment.*
c. *All cabling installed to support this system must be labeled according to the WMATA IT/NCS latest standards and practices.*
d. *Identification and documentation of rack elevations showing the installation position of core device within its host rack.*
e. *All Edge LAN devices must draw power from independent power sources to facilitate power redundancy.*
f. *All Edge LAN devices must be appropriately named according to WMATA IT/NCS standards and labels must reflect the device name.*
g. *All port assignments must be identified and documented in a manner that associates every local port to its remote connection.*
h. *All Edge LAN devices will be programmed with configuration vetted and approved by WMATA IT/NCS.*

1. **TITLE: EDGE *LAN SYSTEM RUGGEDIZED***

2. **GENERAL DESCRIPTION & FUNCTIONALAITY***: Describes system and its functionality along with a list of attributes and subsystems.*

a. *Ruggedized Layer 2 switch platforms in Metronet come in two categories and 2 primary port densities. A switch could be either a non-ruggedized or ruggedized platform, and a switch could either be 24 or 48 port switch depending on where it is required and the pre-determine port density required. All switches must run current code to include all required layer 2 functionalities to be defined in the functional requirement document. Where applicable IP routing codes may be required for switches. In this instance the switch must come with advanced IP license to allow routing. No more than 2 switches can be daisy chained. A requirement of more than 2 switches will require a stack solution*

.

3. **SYSTEM COMPONENTS:**

c. **Form Factor:**

I. *1U Form factor chassis*
II. *24 10/100/1000 POE Ports or 48 10/100/1000 POE Ports*
III. *2 10GigabitEthernet ports*
IV. *Redundant Power Supplies*
V. *Stack configuration where multiple switches are required (More than 2)*

d. **Software:**

I. *IPV4/IPV6 (dual stack) capabilities*
II. *Layer 2 protocols such as LLDP/CDP, RSTP,VLAN, 802.1Q, LACP*
III. *Multicast capability to include support for protocols like IGMPV2 and IGMPv3*
IV. *QOS capabilities to include DSCP, COS among others.*
V. *Support for SNMP, NETFLOW and common logging frameworks*
VI. *Must support secure access through the use of encrypted sessions in combination with security servers such as TACAC+, RADIUS?*
VII. *Interoperability with existing L2 equipment using 802.1q and LACP.*

4. **INSTALLATION:** *A brief description of each installation procedure to complete the system.*

a. *All equipment must be properly grounded according to manufacturer's instructions.*
b. *All cabling, must be routed through the appropriate patch panels, terminations blocks and cross connect and patching media. Equipment should not be patched directly into any network equipment without first landing on a patch panel or similar cable aggregating equipment..*
c. *All cabling installed to support this system must be labeled according to the WMATA IT/NCS latest standards and practices.*
d. *Identification and documentation of rack elevations showing the installation position of core device within its host rack.*
e. *All Edge LAN devices must draw power from independent power sources to facilitate power redundancy.*
f. *All Edge LAN devices must be appropriately named according to WMATA IT/NCS standards and labels must reflect the device name.*
g. *All port assignments must be identified and documented in a manner that associates every local port to its remote connection.*
h. *All Edge LAN devices will be programmed with configuration vetted and approved by WMATA IT/NCS.*

TABLE 27.1 PASSENGER STATION LAN/WAN SYSTEMS WITHIN PASSENGER STATION LIMITS

SYSTEM LOCATION	SYSTEM TYPE
Kiosk	Edge LAN System (Non-Ruggedized)
Mechanical Rooms	Edge LAN System (Non-Ruggedized)
Communications Equipment Rooms (CER)	Edge WAN System Edge LAN System (Non-Ruggedized)
Telecommunication Room (TR)	Edge WAN System Edge LAN System (Non-Ruggedized)
Maintenance Rooms	Edge LAN System (Non-Ruggedized)
AC Switchboard Rooms	Edge LAN System (Ruggedized)
Electrical Cabinet Rooms	Edge LAN System (Non-Ruggedized)

TABLE 27.2 REMOTE ANCILLARY STRUCTURES LAN/WAN SYSTEM REQUIREMENTS	
STRUCTURE	TELEPHONE INSTRUMENTS
Train wash areas.	Edge LAN System (Ruggedized)
Fan Shaft Vent	Edge LAN System (Ruggedized)
Chiller Plants	Edge LAN System (Ruggedized)
Traction Power Substation	Edge LAN System (Ruggedized)
Drainage Pumping Station	Edge LAN System (Ruggedized)

Traction Power Tie Breaker Station	Edge LAN System (Ruggedized)
Parking Lot & Garage Booths	Edge LAN System (Non-Ruggedized)

WMATA PROVIDED SERVICES:

a. All router and switch programming will be done by the WMATA IT/NCS department. The awarded contractor must coordinate with WMATA for these and all other network system programming services.
b. All system specific products will be listed in the ***WMATA IT/NCS Equipment Standards*** document. A copy of this can be obtained from the assigned WMATA IT/NCS Project Manager (PM).

General: City of Alexandria (CoA)

The City of Alexandria's Project Coordinator will be the point of contact for all communication with the City. The Project Coordinator will assist in facilitating the City process guidelines as detailed out in this document and will serve as the liaison between WMATA/contractor and the various City departments, as needed.

The City requests a kick-off Partnering Meeting with WMATA and the contractor to discuss the City of Alexandria's overall process and requirements as outlined in this section. This includes discussing the permit and plan approval process as it pertains to the various City departments and the below City permit and plan approval requirements. The City envisions this to be a half day working session.

General: National Park Service (NPS)

Any submittal that is made to the City of Alexandria for review and approval will also be distributed to the National Park Service for review and approval. NPS will review and approve all submittals, specifically submittals associated with landscaping, wetland mitigation, lighting, and plantings. These reviews will be concurrent with the City of Alexandria's reviews. The initial NPS staff review time will be 20 business days. For revised submissions, NPS staff review time will be 15 business days. The City Project Coordinator will compile City of Alexandria and NPS review comments and transmit the comments back to the contractor.

The design builder is responsible for the design and construction/installation of all landscape wetland plantings. The design builder is responsible for a five (5) year warranty period from when the City and WMATA accept the wetland plants following installation. The designer builder is responsible for the maintenance, monitoring, and reporting, for one (1) year from when the warranty period commences.

General: United States Army Corps of Engineers (USACE) – Section 404 JPA

The City/WMATA team has had advanced discussions with the Army Corps of Engineers (USACE) regarding the Section 404 Joint Permit Application (JPA) and process. The City has provided the approved Development Special Use Permit (DSUP) drawings for an advanced USACE review and comment. The City will convey any preliminary comments or conditions which are provided by the USACE in response to the advanced review.

For permit submission and coordination with the USACE, the City is the owner and will be the applicant on Joint Permit Application (JPA) and the City will manage the submission of the Section 404 JPA Corps of Engineers permit for wetland impacts. The Design Builder will be responsible to support the City to provide (1) design drawings and any supplemental exhibits required for submission to USACE and (2) any material needed (including design drawings) for

additional submissions and (3) to assist in answering USACE questions from the JPA review. This includes the Design Builder assisting the City in finalizing and getting approval of the Wetland Planting Plan (in compliance with DSUP2016-0005). The City will co-facilitate and manage the comment responses back to the USACE.

During construction, the Design Builder is responsible for complying with all conditions of the awarded permit and post-construction warranty and maintenance for plant material. The Design Builder is also responsible to support the City in finalizing and getting approval of applicable items per the NPS ROD which include, but are not limited to, the Invasive Species Management Plan.

The Design Builder is responsible for the landscape design including wetland restoration of temporarily impacted wetland areas and other natural areas which are disturbed during construction. The landscape design will be reviewed and approved by NPS to ensure compliance with the NPS ROD and will also be part of the City's Final Site Plan submission. The Design Builder will be responsible for complying with all conditions stipulated in the NPS ROD for plant warranty and monitoring.

Permits: City's Development Special Use Permit (DSUP) - Amendment

As identified in the design documents and detailed in Volume 10 "CITY OF ALEXANDRIA PROJECT REQUIREMENTS AND PROCESS GUIDE", the Alexandria City Council approved the following:

- DSUP2016-0004: Potomac Yard Metrorail Station
- DSUP2016-0005: Potomac Greens Park Amendment
- DSUP2016-0006: Potomac Yard Park Amendment

The Design Builder will be responsible for designing and submitting all material for all necessary Amendment(s) to any of the above mentioned DSUPs. A DSUP Amendment(s) will be required if there are any substantive changes that significantly alter the design or function of the approved station design. This Amendment(s) process will commence immediately after Notice to Proceed. The Design Builder will be responsible to obtain approval of the conceptual design by the Board of Architectural Review prior to the DSUP Amendment(s) approval by City Council. The Design Builder will obtain the DSUP Amendment(s) approval by City Council prior to commencing coordination work with the City on the Final Site Plan and Building Permit submissions. The City process for obtaining the Final Site Plan and Building Permit approval are detailed out below.

The Design Builder should expect multiple meetings with each of the City of Alexandria's City Council, the City's Board of Architectural Review, project stakeholders, and community meetings. The total number of meetings is not expected to exceed ten. The level of effort for the design builder for these meetings would be to have two (2) team members from the design / architect team available to assist in answering design related questions. One individual should

be from the design/architect team and one should be a representative with decision making capabilities and full project knowledge.

The previously approved DSUPs will serve as the basis for any amendment. The City will forward all approved DSUP applicable electronic files and material to the design builder for their use. The City's Project Coordinator will assist in facilitating all City processes.

The below links provide additional information for the DSUP Amendment process. The associated fees will be waived.

https://www.alexandriava.gov/uploadedFiles/planning/info/Development_Tri-fold_Brochure_FINAL.pdf

https://www.alexandriava.gov/uploadedfiles/planning/info/forms/final_checklist.pdf

Transportation and Environmental Services (T&ES)

There are three (3) Development Special Use Permits (DSUP) associated with this contract:

- DSUP #2016-0004 - Potomac Yard Metrorail Station
- DSUP #2016-0005 - Potomac Greens Park Amendment
- DSUP #2016-0006 - Potomac Yard Park Amendment

Each DSUP will require a Final Site Plan submission and approval. In addition, DSUP #2016-0004 - Potomac Yard Metrorail Station, will need approval from the Board of Architectural Review and receive a Certificate of Appropriateness. This process is detailed out in the "*Planning and Zoning*" section of this document.

Final Site Plan Review Process

Step 1. Engineers & Surveyors Institute (ESI) Minimum Submission Review (MSR): the Final 1 Site Plan shall be submitted and verified by ESI prior to submitting the Final I Site Plan to the City. The plan must be deemed 'Acceptable' by ESI prior to submission to the City.

Link to Engineers & Surveyors Institute (ESI) for guidelines:
http://www.esinova.org/Jurisdictions/Alexandria/Alexandria.htm

Links to Memos to Industry page for Information on ESI processes:
https://www.alexandriava.gov/tes/info/default.aspx?id=3522

The first above link will provide access to the two (2) checklists:

- MSR Site Plan Checklist
- Team Peer Review Checklist Package

Minimum Submission to ESI - 3 business days for ESI staff review and to deem plan complete and ready for Final 1 submission.

Step 2. Submit to City – Final Site Plan I review (all plans are submitted to P&Z)

Design Review

Upon the plan being deemed 'Acceptable' by ESI, the contractor shall submit the Final Site Plan to the City's Project Coordinator for an advanced review of the document prior to the official submission to the City. This advanced submission will allow the City to perform a cursory review of the document to assist in the review and approval of the official submission. This advanced review would take three (3) full business days. Comments would then be provided back to the contractor for inclusion into the official submission.

Final Site Plan Review:

Final I: 20 business days staff review (this time includes ESI review)
Final II: 15 business days staff review (this time includes ESI review)
Final III: 15 business days staff review (this time includes ESI review)

As a reference, below is a City of Alexandria typical list of drawing sheet titles that would be included in the Final Site Plan submission:

1	Cover Sheet
2	DSUP Conditions
3	General Notes & Legend
4	Construction Notes
5	Contextual Site Plan
6	Existing Conditions Plan
7	Demolition Plan
8	Proposed Site Plan
9	Grading Plan
10	Dimension Plan
11	Typical Sections
12	Site Section
13	Open Space Plan
14	Utility Plan
15	Utility Test Pit Plan
16	Sanitary Sewer Profile
17	Waterline Profile

18	Average Finished Grade Exhibit
19	Erosion & Sediment Control Phase I
20	Erosion & Sediment Control Phase II
21	Erosion & Sediment Control Notes & Details
22	Preliminary Subdivision Plan
23	Pre Development Drainage Map
24	Post Development Drainage Map
25	BMP Plan
26	Stormwater Management Computations
27	BMP Notes and Details
28	Storm Sewer Plan
29	Storm Profiles
30	Storm Computations
31	Adequate Outfall Analysis
32	Stormwater Pollution Prevention Plan
33	Sanitary Outfall Analysis
34	Site Details
35	Site Elevations
36	Photometrics Plan
37	Lighting Cuts and Details
38	Final Plat (For Information Only)

Submission deadlines – All final site plan submissions are due Thursday before noon. Final 1 submission will be scheduled for the second Tuesday's ESI. All other submittals (Final #2, Final #3, etc.) will be scheduled for the following Tuesday's ESI (if determined that the plan needs to go back to ESI).

Partial Release components (if desired by the contractor):

If the contractor desires, a partial release of the Site Plan can be achieved. That would allow the contractor to commence work on specific activities. The below section identifies what would need to be addressed in order for the partial release to be granted. Once the partial release is granted, this would allow the contractor to commence certain E&S and land disturbing activities. The partial release requirements are detailed below, but it should be noted this process commences after the Final II submission is made and staff has deemed that all

comments and conditions have been addressed completely for the below identified components.

Plan sections required to be approved with no comments through normal review prior to partial release (separate track reviews will not be provided for partial release):

1. Demolition
2. Sediment and Erosion Control
3. Stormwater management (quality and quantity)
4. BMPs

Note: All items required by new stormwater regulations must be completed and accepted on the plan.

Non- plan documents/other items required to be approved prior to partial release:

1. Construction Management Plan/TCP
2. SWPPP, Construction General Permit
3. BMP Maintenance Agreement
4. Phase 1 ESA
5. Phase II ESA (if required)
6. HASP, Remediation Plan, etc. (if required)
7. Geotechnical report
8. WQIF request letter

Project Close-out

Contractor shall meet the requirements of the City's final project closeout process (As-builts for all elements to be owned and maintained by the City).

As-built/Close-out submission requirements:

- Information required for final as-built plan is on this checklist: http://alexandriava.gov/uploadedfiles/tes/info/As-Built%20Checklist.pdf
- Complete final as-built plans, to include landscape and irrigation as-builts (if irrigation provided) that meet the requirements of the landscape guidelines. Relevant pages from the landscape guidelines are attached. Each sheet needs the as-built signature block on the lower right hand corner of the page (also attached).
- Plans are required to be sealed by the appropriate professional, clearly noted as "As-built", and have an As-Built Certification Block (attached).
- Provide stormwater BMP certification letter, must be sealed by P.E.
- Provide BMP maintenance contract and Operations and Maintenance Manual

  - Contents of O&M Manual are as follows: provide hard copy and include a digital copy of this as well: an explanation of the functions and operations of the BMP(s); drawings and diagrams of the BMP(s) and any supporting utilities; copy of released site plan sheet showing location of BMP(s); catalog cuts on maintenance requirements including any mechanical or electrical equipment; manufacturer contact names and phone numbers; a copy of the executed maintenance service contract; and a copy of the recorded maintenance agreement with the City.
- Provide a Stormwater Conveyance Certification letter, must be sealed by P.E.
- Provide a Landscape Certification letter, per the Landscape guidelines which must be sealed by a Landscape Architect. (Relevant sheets from landscape guidelines included)

T&ES Permits

Construction permits are required for this project. The contractor shall obtain all applicable permits and licenses and keep copies of the same on site during construction.

Any work in the public right of way shall require a separate permit from the City of Alexandria (Transportation and Environmental Services, T&ES).

The below link is to the T&ES basic permit guidelines:
https://www.alexandriava.gov/tes/info/default.aspx?id=3456

Specific permits for this project will include, but are not limited to (the link to the application is provided):

- Ingress / Egress (https://www.formrouter.net/form01@COAVA/TES_right_of_way_app.pdf)
- Noise Permits (https://www.alexandriava.gov/uploadedFiles/tes/info/noiseconstruction.pdf)
- Hauling (https://www.formrouter.net/form01@COAVA/TES_hauling_app.pdf)
- Excavation (https://www.formrouter.net/form01@COAVA/TES_excavation_app.pdf)
- Lane Closures (https://www.formrouter.net/form01@COAVA/TES_right_of_way_app.pdf)

The City currently has five (5) business days to review and approve permit applications. Any modifications to this timeline will be posted on the City's website.

Planning and Zoning

The Old and Historic Alexandria District (OHAD) Board of Architectural Review (BAR) was established in part to control development along the George Washington Memorial Parkway (GWMP) as it passed through the City to protect the memorial character of the GWMP. Additionally all the George Washington Memorial Parkway within the City's boundaries and a buffer zone on either side is included within the boundaries of the Old and Historic Alexandria District. Due to the proximity of the George Washington Memorial Parkway, the BAR will have review and approval authority for this project over all permanent structures above grade. This includes all station components as well as all exterior features and finishes (color and material).

The contractor will be required to file electronic submissions and hard copies for each BAR hearing 30 days in advance of the hearing date. Filing deadlines and hearing schedules can be found here:
https://www.alexandriava.gov/Preservation#ApplicationsInstructions

Typical submissions materials include, but are not limited to, site plans, elevations, details, sections and materials samples. The contractor will be responsible for ensuring that all noticing requirements are satisfied as mandated by the zoning ordinance. The City's Project Coordinator will assist in facilitating this effort.

The below link is to the Planning and Zoning BAR Certificate of Appropriateness Application. This application details out the noticing requirements mandated by the ordinance as well as submission requirements.
https://www.alexandriava.gov/uploadedFiles/planning/info/forms/BARapplication2014.pdf

The typical process for a project of this size and complexity is for the contractor to present components of the project allowing for individualized review and discussion over the course of several public hearings. Similarly, the BAR's concept review process occurred over several meetings in 2015 and 2016. The process with the BAR is an iterative design process. There will be comments and questions asked for each component that will need to be addressed at the subsequent hearing. For this project, the City envisions the BAR public hearings on the project to focus on component elements such as the following:

- North and South Mezzanines
- Station Platform
- Pedestrian Bridges
- Western Entrance Pavilions
- Site Work (including security fence)
- Presentation of Final Station Design and all associated elements

Thus, when looking at the overall schedule to attain the required Certificate of Appropriateness, the forecasted schedule for BAR and design-related meetings includes:

- Up to ~~Eight~~ Four (4~~8~~) Board of Architectural Review (BAR) Public Hearings for final approval of Certificate of Appropriateness
- ~~Eight~~ Four (4~~8~~) Meetings with DPI/BAR/P&Z/NPS staff regarding design and BAR matters
- Four (4) informal pre-hearing meetings with 1-2 BAR members at a time

The below link will provide additional information into the City's Planning and Zoning Development Review Process.
https://www.alexandriava.gov/uploadedfiles/planning/info/development_tri-fold_brochure_final.pdf

Office of Environmental Quality

During construction, an onsite Health and Safety Manager/Officer must be present at all times during activities, to include excavation and removal of onsite contaminated materials. This individual must have the authority to stop work if unsafe or hazardous conditions related to contaminants are observed.

City Noise Ordinance

Normal hours of construction (Section 11-5-4(b)(15)):

M-F 7am – 6pm
Sat 9am – 6pm
No work on Sunday

Any deviations to the standard working hours would require an approved Noise Mitigation Plan / Noise Variance. City requires 10 business day notification prior to an application for a noise variance permit being submitted. City currently has five (5) working days to review and approve permit applications. Any modifications to this timeline will be posted on the City's website.

The City does periodically approve Noise Variance Plans for construction.

Allowable hours for pile driving (Section 11-5-4(b)(19))

M-F 9am – 6pm
Sat 10am – 4pm
No pile driving on Sunday

Work in the right of way for excavation is restricted to the following (Section 11-5-109):

Monday through Saturday 7 AM to 5 pm
No excavation in the right of way is permitted on Sundays.

No work on the following holidays:

- New Year's Day

- Memorial Day
- July 4TH
- Labor Day
- Thanksgiving Day
- Christmas Day

CODE

All required BAR approvals shall be obtained and the full site plan shall be released prior to receiving building permits for vertical construction above grade.

The contractor is responsible for obtaining all required building permits.

30 business days staff review for initial building permits
15 business days staff review for revised building permits

Information on the City's Code Compliance and Permit needs can be found here:
https://www.alexandriava.gov/code/info/default.aspx?id=28672

Information about the City's Permit Center can be found here:
https://www.alexandriava.gov/PermitCenter

Park and Rec (RPCA)

Information on City's Landscape Guidelines can be found here:

https://www.alexandriava.gov/uploadedFiles/recreation/info/040907_land_guidelines.pdf

Information on City's Park Facility Standards Manual can be found here:

https://www.alexandriava.gov/uploadedFiles/recreation/parks/Park%20Facilities%20Standards%20Manual.pdf