Serial Number: RFP-FQ16146/NAC
Date of Issue: November 28, 2016
Original Proposal Due Date: February 3, 2017
Revised Proposal Due Date: March 20, 2017

WASHINGTON METROPOLITAN AREA TRANSIT AUTHORITY
600 FIFTH STREET, N.W.
WASHINGTON, D.C. 20001

March 8, 2017
AMENDMENT NO. 3
REQUEST FOR PROPOSALS
FOR
POTOMAC YARD METROAIL STATION
FQ16146/NAC

TO WHOM IT MAY CONCERN:

The Request For Proposals and Proposal Documents accompanying RFP FQ16146/NAC requesting Proposals for the above project are hereby changed in part as listed below.

1. Volume 1 – Divisions 0 and 1

Delete the following pages and in lieu thereof substitute the accompanying pages:

DELETE	SUBSTITUTE	DESCRIPTION
00 20 00-15	00 20 00-15	Revised
00 20 00-16	00 20 00-16	Revised
00 43 30-1	00 43 30-1	Revised
00 43 40-1	00 43 40-1	Revised
00 43 40-2	00 43 40-2	Revised
00 43 40-3	00 43 40-3	Revised
00 80 00-13	00 80 00-13	Revised
00 80 00-15	00 80 00-15	Revised
Vol 1, Pg.182-185	Vol 1, Pg.182-185	Revised
01 63 00-1	01 63 00-1	Revised

2. Volume 2 – Divisions 2 and 49

Delete the following pages and in lieu thereof substitute the accompanying pages:

DELETE	SUBSTITUTE	DESCRIPTION
04 43 15-All Pages	04 43 15-All Pages	Revised

3. Volume 3.1 – Project Directive Drawings

Delete the following drawing(s) and in lieu thereof substitute the accompanying pages:

DELETE	SUBSTITUTE	DESCRIPTION
C8e-A-005	C8e-A-005	Revised
C8e-A-010	C8e-A-010	Revised
C8e-A-016	C8e-A-016	Revised
C8e-A-130	C8e-A-130	Revised
C8e-A-230	C8e-A-230	Revised

3. Volume 3.2 – WMATA ST and DD Drawings

Add the following Drawings:

ADD	DESCRIPTION
DD-TW-CR-002	Composite Rail Assembly - Ballasted Track
DD-TW-CR-003	Composite Rail Clearance Envelope and Splice Joint Assembly
DD-TW-CR-004	Composite Rail End Approaches
DD-TW-CR-005	Composite Rail Expansion Joint Assembly and Details
DD-TW-CR-006	Contact Rail Fiberglass Insulator
DD-TW-CR-007	Porcelain Insulator Assembly and Details Sheet 1 of 2
DD-TW-CR-008	Porcelain Insulator Assembly and Details Sheet 2 of 2
DD-TW-CR-009	Anchor Assembly Details and Sections Sheet 1 of 2
DD-TW-CR-010	Anchor Assembly Details and Sections Sheet 2 of 2
DD-TW-CR-011	Spacing-Expansion Joints, Anchors and Insulators
DD-TW-CR-012	Expansion Joint Jumper Cable Support Details in Ballasted Track
DD-TW-CR-013	Composite Rail With Type A Protection Cover
DD-TW-CR-014	Type A Protection Cover Assembly Details and Sections
DD-TW-CR-015	Composite Rail With Type B Protection Cover
DD-TW-CR-016	Type B Protection Cover Assembly Details and Sections
DD-TW-CR-017	Composite Rail Typical Conduit and Cable Arrangement
DD-TW-CR-022	Contact Rail Arrangement No. 10 Double Crossover 14'-0", 36'-10" and 40'-6" Track Centers

4. Volume 10.2 – DSUP #2016-0004 PotomacYard Station Reference Drawings

Delete the following pages and in lieu thereof substitute the accompanying pages:

DELETE	SUBSTITUTE	DESCRIPTION
Vol 10.2 C-04	Vol 10.2 C-04	Revised
Vol 10.2 C-05	Vol 10.2 C-05	Revised
Vol 10.2 C-06	Vol 10.2 C-06	Revised
Vol 10.2 C-07	Vol 10.2 C-07	Revised
~~Vol 10.2 C-08~~	~~Vol 10.2 C-08~~	~~Revised~~

5. Acknowledgment

Offerors are required to acknowledge receipt of this amendment on the Technical and Price Proposal Forms (Pages 00 41 20-1 and 00 41 30-1) in the space provided. Failure to acknowledge all amendments may cause the bid to be considered not responsive to the invitation, which would require rejection of the Proposal.

Norie A. Calvert
Contracting Officer

Enclosures

* * * * *

b. A description of Proposal deficiencies will be provided to Proposers in the competitive range for revision or modification of their Proposal. Technical Proposal weaknesses and deficiencies will be discussed as well as adverse past performance information with all Proposers in the competitive range.

c. Negotiations will be conducted and may include bargaining and trade-offs. The Authority will establish pre-negotiation objectives with regard to price and technical factors tailored to each Proposal. The Authority may negotiate with Proposers to increase its performance for additional technical merit. Also, the Authority may suggest to Proposers that they decrease their performance and reduce their costs to make their Proposals more competitive. The Proposers will also be given an opportunity to correct errors and omissions in their Price Proposals.

d. After discussions have begun, the Authority may determine that a proposer is no longer considered among the highest rated proposers and may eliminate that proposer from the competition whether or not all material aspects have been discussed or the Proposer has been afforded the opportunity to submit a Proposal revision.

e. If discussions are held, the Authority will request Proposal revisions, and Best and Final Offers as appropriate from all Proposers remaining in the competitive range.

I. Best Value Determination: The technical merit of the Proposal is significantly more important than the price, and the price must be fair and reasonable. The Authority may select other than the lowest priced Proposal if it is determined by value analysis, or technical/cost trade-offs, that the Proposal offers the greatest overall benefit to the Authority. As Proposals become more technically equivalent, then price becomes more important.

00 21 00 SUPPLEMENTARY INSTRUCTIONS TO PROPOSERS

A. DELETED

#

#

00 25 00 PRE-PROPOSAL MEETINGS SCHEDULE

A. Unless otherwise notified, a pre-Proposal conference will be held as noted in the Project Solicitation Schedule, Section 00 10 13, PROJECT SOLICITATION SCHEDULE. The purpose of this conference will be to answer questions regarding, or requests for clarifications of, the Solicitation documents. It is requested that Proposers submit their questions and requests for clarifications of the terms, conditions, and requirements of this Request for Proposal to the Contracting Officer in writing either in advance of the meeting or during the meeting. Questions from the floor, however, are permissible.

B. Site visits will be limited to those Design Builders who submit a proposal and will be scheduled after the proposals are received.

C. Proposers are required to visit the Site of the Work and inform themselves of all local conditions that may affect the Work or the cost thereof.

D. The Site Visit will be scheduled by the Authority in advance and each appointment shall be limited to no more than 45 minutes. The Design Builders will be limited to one (1) appointment with a maximum number of six (6) members of the Design Build team in attendance. The Authority will not grant access to areas within the WMATA Right of Way including the tracks and Traction Power Substation (TPSS).

E. The Proposer acknowledges and agrees that it shall be bound by all the terms of the Contract regardless of its attendance at the pre-Proposal conference, or the thoroughness of its preliminary Site-condition investigation prior to submitting its Proposal.

00 26 00 PRE-AWARD MEETING

A. The Authority requires that a pre-award meeting with the successful Proposers be held prior to the actual award of the Contract. The purpose of the meeting will be to review the successful Proposer’s understanding of the Contract Documents, contractual requirements prior to award, and to confirm the successful Proposer's capabilities, financial standing, and past experience.

B. The pre-award meeting will be held in the Washington Metropolitan area and shall be chaired by the Authority and attended by representatives of the Authority, the successful Proposer, and its Key Staff nominated for assignment to the Contract, the Designer, the Design-Builder, including major subcontractors if so requested by the Authority. Concerned parties shall each be represented by persons thoroughly familiar with and authorized to conclude matters relating to the Work described in the RFP Documents.

C. Agenda discussion items for the meeting may include, but are not limited to, the following:

1. Requirements for acceptability of payment and performance bonds.

2. Requirements for DBE participation.

3. Verification of qualifications of Key Staff. The Design-Builder shall not substitute any Key Staff identified in its Technical Proposal As Finally Accepted without the written approval of the Authority. The Design-Builder shall provide the Authority with all information as may be reasonably requested regarding substitutions, and any proposed substitutes shall share similar or better qualities than the person substituted.

SECTION 00 43 30

BRAND NAME OR EQUAL FORM

# #

State in the spaces below the Manufacturer's Name, Part/Product Number, Description, and to provide relevant specifications, including technical data and Material Safety Data Sheets. Be advised that these items, if any, are only set apart for identification.

# #

Spec Section/Product Specified: _____

Manufacturer: _____

Product Proposed: _____

Manufacturer: _____

Spec Section/Product Specified: _____

Manufacturer: _____

Product Proposed: _____

Manufacturer: _____

Spec Section/Product Specified: _____

Manufacturer: _____

Product Proposed: _____

Manufacturer: _____

Spec Section/Product Specified: _____

Manufacturer: _____

Product Proposed: _____

Manufacturer: _____

# #

SECTION 00 43 40

PRICE PROPOSAL SCHEDULE

(Submit with Proposal)

A. DESCRIPTION OF WORK

1. The Design-Builder shall Design and Build the Facilities in the manner and at the locations set forth in the RFP Documents of this solicitation, and in accordance with the Technical and Price Proposals as finally accepted by the Authority. The Design-Builder shall design the Work pursuant to the Contract Documents and the Rules and Regulations of the Jurisdictional Authorities, and shall construct the facility in strict accordance with the Issued for Construction Specifications and Issued for Construction Drawings and in full compliance with the Rules and Regulations of the Jurisdictional Authorities.

B. BASIS FOR AWARD

1. The best value evaluation of the Proposal by the Authority will consider the Total Base as Finally Accepted.

C. PRICE PROPOSAL

Price Proposal Schedule

	Item #	Description	Note #	Est. Qty.	Unit	Unit Price	Total Amount	
	Base							
	1	Mobilization	1	1	LS	$3,000,000	$3,000,000	
	2	General Conditions	2	1	LS	$_____	$_____	
	3	Site Work	3	1	LS	$_____	$_____	
	4	Potomac Greens Park	4	1	LS	$_____	$_____	
	5	Potomac Yard Park	5	1	LS	$_____	$_____	
	6	Site Restoration and Mitigation	6	1	LS	$_____	$_____	
	7	Station Structure	7	1	LS	$_____	$_____	
	8	Station Finishes	8	1	LS	$_____	$_____	
	9	AC Room Building Construction and Equipment	9	1	LS	$_____	$_____	
	10	South Pedestrian Bridge, Pavilion, and Bike Ramps	10	1	LS	$_____	$_____	
	11	North Pedestrian Bridge and Pavilion	11	1	LS	$_____	$_____	
	12	Design Items 3 through 11		1	LS	$_____	$_____	
	13	Traction Power	12	1	LS	$_____	$_____	
	14	Communications	12	1	LS	$_____	$_____	
	15	Automatic Train Control	12	1	LS	$_____	$_____	
#	16	Hazardous Waste	13	1200	CY	$_____	$_____	#
#	17	PCB-Contaminated Soil	14	1200	CY	$_____	$_____	#
#	18	Petroleum-Contaminated Soil 1	15	1200	CY	$_____	$_____	#
#	19	Petroleum Contaminated Soil 2	16	1200	CY	$_____	$_____	#
#	20	NOT USED	17		CY	$_____	$_____	#

#	21	Permitting Allowance	18	1	Allow	$50,000	$50,000	#
#	22	Utility Allowance	19	1	Allow	$250,000	$250,000	#
						Total Base Price	**$_____**	

Notes to Proposers

(1) The Mobilization costs shall include the premium costs for payment and performance bonds. The remaining mobilization costs shall be paid in six equal installments over the first six payment requests.

(2) Contractor shall provide a quotation for all cost elements that make up General Conditions. General Conditions costs shall not be included with any other cost elements proposed under items 1 and 3 through 24 above.

(3) Contractor shall provide a quotation for all work below station platform level, which includes, but is not limited to:

- earthwork
- retaining walls
- demolition
- grading and drainage
- stormwater management
- erosion and sediment control
- pavement, striping
- signage
- utilities
- perimeter fence
- treatment of contaminated water
- track work

All soil shall be assumed to be contaminated with arsenic above background concentrations. Quote shall include the cost of characterization, removal, transportation, and disposal.

(4) Contractor shall provide a quotation for all work on Potomac Greens Park which includes, but is not limited to:

- demolition
- grading
- pervious and impervious pavement
- gazebo
- playground equipment
- site furnishings
- sodding
- seeding
- erosion and sediment control
- drainage
- utility(s) relocation
- irrigation
- site lighting
- retaining walls
- landscaping

(5) Contractor shall provide a quotation for all work on Potomac Yards Park, which includes, but is not limited to:

- grading
- pervious and impervious pavement
- gazebo
- playground equipment
- site furnishings
- sodding
- seeding
- erosion and sediment control
- drainage
- utility(s) relocation
- irrigation
- site lighting
- retaining walls
- bicycle parking area
- DELETED
- DELETED
- raised high visibility crosswalk(s)
- landscaping

(6) Contractor shall provide a quotation for the demolition and restoration of the Potomac Greens Drive traffic circle, the demolition and restoration of Old Town Greens tot lots and tennis courts removed for construction access and temporary relocation of tot lot. Old Town Greens tot lot shall be relocated to a site within Old Town Greens HOA.

(7) Contractor shall provide a quotation for all station structure work at and above the platform level, including platforms, mezzanines, and vertical transportation.

(8) Contractor shall provide a quotation for station finishes, which include, but are not limited to:

- paver tiles
- kiosks
- light fixtures
- platform edge
- platform lighting
- bathrooms
- benches

(9) Contractor shall provide a quotation for all costs related to the construction of off-site AC room and access road as well as all electrical equipment, ductbanks, conduit, and connections. Equipment costs include, but are not limited to design, installation, testing, and commissioning.

(10) Contractor shall provide a quotation for the south pedestrian bridge, which includes east ramp (bicycle ramp north of the South Pavilion) and west ramp (connecting to Potomac Greens area).

(11) Contractor shall provide a quotation for the north pedestrian bridge and Entry Pavilion, connecting to the future North Potomac Yard development.

(12) Traction Power, Automatic Train Control, and Communications: Contactor shall provide a quotation for equipment costs which include, but are not limited to design, supply, installation, and testing.

(13) Hazardous Waste: The contractor shall provide a quotation for the removal and disposal of hazardous waste from the site. For inclusion in this category, soil must fail the toxicity characteristic leaching procedure. Soil in this category shall be assumed to be contaminated with other constituents, including, but not limited to, arsenic, petroleum, and benzene, toluene, ethyl benzene, and xylenes (BTEX). Quote shall include the cost of characterization, removal, transportation, and disposal. # #

(14) PCB-Contaminated Soil: The contractor shall provide a quotation for the removal and disposal of PCB-contaminated soil from the site. For inclusion in this category, concentration of PCBs shall exceed 1 mg/kg. Soil in this category shall be assumed to be contaminated with other constituents, including, but not limited to, arsenic, petroleum, and BTEX. Quote shall include the cost of characterization, removal, transportation, and disposal. # #

(15) Petroleum Contaminated Soil 1: The contractor shall provide a quotation for the removal and disposal of petroleum-contaminated soil from the site. For inclusion in this category, soils shall have a concentration of petroleum hydrocarbons (TPH) equal to or greater than 500 mg/kg, and/or of BTEX equal to or greater than 10 mg/kg. Soils in this category shall be assumed to be contaminated with arsenic above background. Quote shall include the cost of characterization, removal, transportation, and disposal. # #

(16) Petroleum Contaminated Soil 2: The contractor shall provide a quotation for the removal and disposal of petroleum-contaminated soil from the site. For inclusion in this category, soils shall have a concentration of petroleum hydrocarbons (TPH) equal to or greater than 50 mg/kg, and less than 500 mg/kg, and total BTEX less than 10 mg/kg. Soils in this category shall be assumed to be contaminated with arsenic above background. Quote shall include the cost of characterization, removal, transportation, and disposal. # #

(17) NOT USED

(18) The City of Alexandria shall waive all fees associated with obtaining City of Alexandria Permits. Fee schedules for all other permits required for the Potomac Yard Station, including, but not limited to, National Park Service, Virginia Department of Transportation, Corps of Engineers, and any other State or Federal permit required shall be the responsibility of the Design Builder.

approvals and permits from the City of Alexandria, National Park Service, and the Corp of Engineers required to construct the Potomac Yard Metrorail Station, Potomac Greens Park, and Potomac Yard Park. **NTP+365 cds $635.62 per cds**

Milestone 3: **Complete IT Rooms and Systems Facilities:**– Complete construction of all required communications and IT rooms. The rooms shall be complete and securable, with HVAC, plywood backboard installation on walls, and static resistant flooring, fiber and copper backbone installation and testing and make ready for WMATA installation of IT equipment. All wiring, cables and/or fiber optic lines and appurtenances shall be installed, tested, and commissioned, **NTP+ 970 cds $2,493.01 per cds**

Note: WMATA IT Complete Communications, and IT Room Equipment Installation **NTP Milestone 3 + 60 cds**

Milestone 4: **Complete Station Structure and Track Work**: Completion of the Station Structure, mezzanines, platforms, and roofs, track work, Automatic Train Control, and Traction Power required for abandonment of existing tracks. Complete initial Safety Certification items. Completion of the AC Room building and equipment, Tie Breaker, Train Control rooms and equipment. Commencement of train service through the Station for the remaining duration of contract. Decommission existing tracks and systems as required to commence construction of the Pedestrian bridges. **NTP+ 1030 cds $898.63 per cds**

Milestone 5: **Final Station Completion-** Complete Station, Pedestrian Bridges, Entry Pavilions, and all ancillary facilities and equipment, and Potomac Yard Park. Conduct final Inspection, complete remaining Safety Certification Items. Complete all building systems and equipment commissioning , testing (Pre-functional & Functional Tests) and systems integration, as well as LEED Commissioning. Complete all required O&M training including videotaping and documentation. Complete submission of all deliverables including final as-builts, warranty documents, lien releases, spare parts etc., Facility ready for WMATA Beneficial Occupancy and Revenue Service. **NTP+ 1210 cds**. **$2,772.46 per cds**

Milestone 6: **Wetland Restoration and Potomac Greens Park:** Complete the design, permitting and all work necessary for the restoration of the Wetland and the completion of Potomac Greens Park. **NTP+ 1350 cds $882.14 per cds**

C. See Section 00 72 04, PERIOD OF PERFORMANCE AND/OR PROJECT SCHEDULE, for Project Milestone(s).

00 88 09 PARTNERING – NOT USED

Modify Section 00 70 00, GENERAL CONDITIONS, to add the following Section: PARTNERING WILL NOT BE USED FOR THIS CONTRACT

00 89 04 LIVING WAGE

Modify Section 00 70 00, GENERAL CONDITIONS, to add the following Section:

00 79 04 LIVING WAGE

A. This Contract is subject to the Authority's Living Wage Policy and implementing regulations. The Living Wage provision is required in all contracts for services (including construction) awarded in an amount that exceeds $100,000 in a 12-month period.

1. The Authority Living Wage Rate is $13.85 per hour, and may be reduced by the Design-Builder's per-employee cost for health insurance.

2. The Design-Builder shall:

1. Staying informed of problems caused by the construction.
2. Assisting the Authority in notifying adjacent owners of upcoming work.
3. Preparing and posting advance notice signs as necessary to inform public and surrounding businesses of upcoming construction activities.
4. Assisting the Authority in responding to complaints.
5. Attending public outreach meetings, as necessary. Meetings can include regular construction information meetings, quarterly open houses, media inquiries, tours, ground breaking, and other milestone events.
6. Accommodating Site tours. Tours shall be arranged through the Contracting Officer Representative.

00 89 06 AVAILABILITY OF FUNDS

Modify Section 00 70 00, GENERAL CONDITIONS, to add the following Section:

00 79 06 AVAILABILITY OF FUNDS

A. Funds are not presently available for performance under this Contract beyond the fiscal year which
ends June 30, 2018. The Authority's obligation for performance of the Contract beyond that date is
contingent upon the availability of funds from which payment for Contract purposes can be made. No legal liability on the part of the Authority for any payment may arise for performance under this Contract until funds are made available to the Contracting Officer for performance and until the Design-Builder receives notice of availability, to be confirmed in writing, by the Contracting Officer. Any option exercised by the Authority which will be performed in whole or in part in a subsequent fiscal year is subject to availability of funds in the subsequent fiscal year and will be governed by the terms of this Provision.

00 89 07 ACCESS TO RECORDS

Modify Section 00 70 00, GENERAL CONDITIONS, to add the following Section:

00 79 07 ACCESS TO RECORDS

A. Apart from the more limited record access provisions of the Common Grant Rules, 49 U.S.C. Section 5325(g) provides FTA and DOT officials, the U.S. Comptroller General, or any of their representatives, access to and the right to examine and inspect all records, documents, and papers, including contracts, related to any FTA project financed with Federal assistance authorized by 49 U.S.C. Chapter 53.

00 89 08 FEDERAL STANDARDS

Modify Section 00 70 00, GENERAL CONDITIONS, to add the following Section:

00 79 08 FEDERAL STANDARDS

A. The Design-Builder agrees to comply with applicable third party procurement requirements of 49 U.S.C. chapter 53 and Federal laws in effect now or subsequently enacted; with applicable U.S. DOT third party procurement regulations at 49 C.F.R. § 18.36 or 49 C.F.R. §§ 19.40 through 19.48, and with other applicable Federal regulations pertaining to third party procurements and later amendments thereto. The Recipient also agrees to follow the provisions of the most recent edition

General Decision Number: VA170035 01/13/2017 VA35

Superseded General Decision Number: VA20160035

State: Virginia

Construction Types: Heavy (Heavy and Sewer and Water Line)

Counties: Alexandria*, Arlington, Clarke, Culpeper, Frederick, Fredericksburg*, Spotsylvania and Winchester* Counties in Virginia.

*INDEPENDENT CITIES

HEAVY CONSTRUCTION PROJECTS (Including Sewer and Water Lines)

Note: Under Executive Order (EO) 13658, an hourly minimum wage of $10.20 for calendar year 2017 applies to all contracts subject to the Davis-Bacon Act for which the contract is awarded (and any solicitation was issued) on or after January 1, 2015. If this contract is covered by the EO, the contractor must pay all workers in any classification listed on this wage determination at least $10.20 (or the applicable wage rate listed on this wage determination, if it is higher) for all hours spent performing on the contract in calendar year 2017. The EO minimum wage rate will be adjusted annually. Additional information on contractor requirements and worker protections under the EO is available at www.dol.gov/whd/govcontracts.

Modification Number	Publication Date
0	01/06/2017
1	01/13/2017

BRVA0001-003 05/01/2016

	Rates	Fringes
MASON - STONE.....	$ 35.91	16.17

CARP0177-012 05/01/2016

	Rates	Fringes
CARPENTER, Includes Form Work....	$ 27.81	9.93

---

* ELEC0026-023 11/07/2016

ARLINGTON COUNTY, Cities of Alexandria and Fredericksburg

	Rates	Fringes
ELECTRICIAN.....	$ 44.15	16.47+a

a. PAID HOLIDAYS: New Year's Day, Inauguration Day, Martin Luther King Jr.'s Birthday, Memorial Day, Independence Day, Labor Day, Veterans' Day, Thaksgiving Day, the day after Thanksgiving and Christmas Day.

---

* ELEC0026-024 11/07/2016

CLARKE, CULPEPER, FREDERICK COUNTIES, SPOTSYLVANIA COUNTY (Excluding the City of Fredericksburg), City of Winchester

	Rates	Fringes
ELECTRICIAN.....	$ 30.06	15.85+a

a. PAID HOLIDAYS: New Year's Day, Inauguration Day, Martin Luther King Jr.'s Birthday, Memorial Day, Independence Day, Labor Day, Veterans' Day, Thaksgiving Day, the day after Thanksgiving and Christmas Day.

ENGI0077-019 05/01/2013

	Rates	Fringes
POWER EQUIPMENT OPERATOR:		
35 ton Cranes and Above	$ 32.89	8.45+a
Cranes Below 35 tons	$ 32.40	8.45+a
Mechanic	$ 34.34	8.45+a
Tower and Climbing Cranes	$ 32.89	8.45+a
Tower Cranes and Cranes 100 tons and Over	$ 33.96	8.45+a

a.PAID HOLIDAYS: New Year's Day, Inaugural Day, Decoration Day, Independence Day, Labor Day, Martin Luther King's Birthday, Veterans' Day, Thanksgiving Day, Friday after Thanksgiving and Christmas Day.

b. PREMIUM PAY:
Tower crane and cranes 100-ton and over to receive $1.00 per hour premium.

LABO0710-010 04/01/2010

	Rates	Fringes
LABORER: Pipelayer	$ 16.61	5.41

PAIN0051-014 06/01/2014

	Rates	Fringes
GLAZIER		
Glazing Contracts $2 million and under	$ 24.77	9.85
Glazing Contracts over $2 million	$ 28.61	9.85

PLAS0891-006 02/01/2014

	Rates	Fringes
CEMENT MASON/CONCRETE FINISHER	$ 27.15	9.61

SUVA2010-036 09/01/2010

	Rates	Fringes
DIVER TENDER	$ 22.53	3.98
DIVER	$ 23.73	4.21
IRONWORKER, REINFORCING	$ 22.45	11.85
IRONWORKER, STRUCTURAL	$ 20.55	8.25
LABORERS		
Common or General	$ 11.24	1.32
Flagger	$ 7.39	0.20
Landscape	$ 10.00	
POWER EQUIPMENT OPERATOR:		
Backhoe	$ 18.47	0.75
Bobcat/Skid Loader	$ 11.40	
Bulldozer	$ 17.54	
Excavator	$ 17.79	
Loader	$ 18.99	0.75
Trackhoe	$ 12.75	1.24
Tugboat	$ 19.00	
TRUCK DRIVER, Includes All Dump Trucks	$ 12.14	0.75

WELDERS - Receive rate prescribed for craft performing operation to which welding is incidental.

==========

Note: Executive Order (EO) 13706, Establishing Paid Sick Leave for Federal Contractors applies to all contracts subject to the Davis-Bacon Act for which the contract is awarded (and any solicitation was issued) on or after January 1, 2017. If this

contract is covered by the EO, the contractor must provide employees with 1 hour of paid sick leave for every 30 hours they work, up to 56 hours of paid sick leave each year. Employees must be permitted to use paid sick leave for their own illness, injury or other health-related needs, including preventive care; to assist a family member (or person who is like family to the employee) who is ill, injured, or has other health-related needs, including preventive care; or for reasons resulting from, or to assist a family member (or person who is like family to the employee) who is a victim of, domestic violence, sexual assault, or stalking. Additional information on contractor requirements and worker protections under the EO is available at www.dol.gov/whd/govcontracts.

Unlisted classifications needed for work not included within the scope of the classifications listed may be added after award only as provided in the labor standards contract clauses (29CFR 5.5 (a) (1) (ii)).

The body of each wage determination lists the classification and wage rates that have been found to be prevailing for the cited type(s) of construction in the area covered by the wage determination. The classifications are listed in alphabetical order of "identifiers" that indicate whether the particular rate is a union rate (current union negotiated rate for local), a survey rate (weighted average rate) or a union average rate (weighted union average rate).

Union Rate Identifiers

A four letter classification abbreviation identifier enclosed in dotted lines beginning with characters other than "SU" or "UAVG" denotes that the union classification and rate were prevailing for that classification in the survey. Example: PLUM0198-005 07/01/2014. PLUM is an abbreviation identifier of the union which prevailed in the survey for this classification, which in this example would be Plumbers. 0198 indicates the local union number or district council number where applicable, i.e., Plumbers Local 0198. The next number, 005 in the example, is an internal number used in processing the wage determination. 07/01/2014 is the effective date of the most current negotiated rate, which in this example is July 1, 2014.

Union prevailing wage rates are updated to reflect all rate changes in the collective bargaining agreement (CBA) governing this classification and rate.

Survey Rate Identifiers

Classifications listed under the "SU" identifier indicate that no one rate prevailed for this classification in the survey and the published rate is derived by computing a weighted average rate based on all the rates reported in the survey for that classification. As this weighted average rate includes all rates reported in the survey, it may include both union and non-union rates. Example: SULA2012-007 5/13/2014. SU indicates the rates are survey rates based on a weighted average calculation of rates and are not majority rates. LA indicates the State of Louisiana. 2012 is the year of survey on which these classifications and rates are based. The next number, 007 in the example, is an internal number used in producing the wage determination. 5/13/2014 indicates the survey completion date for the classifications and rates under that identifier.

Survey wage rates are not updated and remain in effect until a new survey is conducted.

Union Average Rate Identifiers

Classification(s) listed under the UAVG identifier indicate that no single majority rate prevailed for those classifications; however, 100% of the data reported for the classifications was union data. EXAMPLE: UAVG-OH-0010 08/29/2014. UAVG indicates that the rate is a weighted union average rate. OH indicates the state. The next number, 0010 in the example, is an internal number used in producing the wage

determination. 08/29/2014 indicates the survey completion date for the classifications and rates under that identifier.

A UAVG rate will be updated once a year, usually in January of each year, to reflect a weighted average of the current negotiated/CBA rate of the union locals from which the rate is based.

WAGE DETERMINATION APPEALS PROCESS

1.) Has there been an initial decision in the matter? This can be:

* an existing published wage determination
* a survey underlying a wage determination
* a Wage and Hour Division letter setting forth a position on a wage determination matter
* a conformance (additional classification and rate) ruling

On survey related matters, initial contact, including requests for summaries of surveys, should be with the Wage and Hour Regional Office for the area in which the survey was conducted because those Regional Offices have responsibility for the Davis-Bacon survey program. If the response from this initial contact is not satisfactory, then the process described in 2.) and 3.) should be followed.

With regard to any other matter not yet ripe for the formal process described here, initial contact should be with the Branch of Construction Wage Determinations. Write to:

Branch of Construction Wage Determinations
Wage and Hour Division
U.S. Department of Labor
200 Constitution Avenue, N.W.
Washington, DC 20210

2.) If the answer to the question in 1.) is yes, then an interested party (those affected by the action) can request review and reconsideration from the Wage and Hour Administrator (See 29 CFR Part 1.8 and 29 CFR Part 7). Write to:

Wage and Hour Administrator
U.S. Department of Labor
200 Constitution Avenue, N.W.
Washington, DC 20210

The request should be accompanied by a full statement of the interested party's position and by any information (wage payment data, project description, area practice material, etc.) that the requestor considers relevant to the issue.

3.) If the decision of the Administrator is not favorable, an interested party may appeal directly to the Administrative Review Board (formerly the Wage Appeals Board). Write to:

Administrative Review Board
U.S. Department of Labor
200 Constitution Avenue, N.W.
Washington, DC 20210

4.) All decisions by the Administrative Review Board are final.

==========

END OF GENERAL DECISION

SECTION 01 63 00

PRODUCT SUBSTITUTION PROCEDURES

PART 1 – GENERAL

1.01 SUMMARY

A. This Section includes administrative and procedural requirements for handling requests for substitutions made after award of the Contract.

B. Other requirements governing the Design-Builder's selection of products and product options are included under Section 01 61 00, BASIC PRODUCT REQUIREMENTS.

1.02 DEFINITIONS

A. Definitions used in the Section are not intended to change the meaning of other terms used in the approved Issued for Construction Drawings and Issued for Construction Specifications.

B. Design-Builder requests for changes in products, materials, equipment, and methods of construction as required or specified by Contract Documents or in approved Issued for Construction Drawings and Issued for Construction Specifications are considered requests for substitutions. The following are not considered substitutions:

1. Revisions to Contract Documents or approved Issued for Construction Drawings and Issued for Construction Specifications requested by the Authority.

2. Specified options of products and construction methods included in Contract Documents or in approved Issued for Construction Drawings and Issued for Construction Specifications. Note that products submitted under an or equal or not limited to provision are considered to be substitutions as specified in Section 01 61 00 BASIC PRODUCT REQUIREMENTS. # #

3. The Design-Builder's determination of and compliance with governing regulations and orders issued by governing authorities.

1.03 SUBMITTALS

A. Requests for substitution from the Design-Builder during design work will be considered by the Authority. Requests for substitution from the Design-Builder during construction will be considered by the Authority if received with adequate time to allow for Authority review and Approval without delaying the Project Schedule. Requests received that may delay the Project Schedule will be considered or rejected at the sole discretion of the Authority.

1. Submit one electronic copy in Adobe (.PDF) file format of the Brand Name or Equal Form, Section 00 43 30, BRAND NAME OR EQUAL FORM, for each request for substitution to the Contracting Officer Representative for consideration of the form and in accordance with procedures required for Change Order proposals as specified in Section 00 74 08, CHANGES, as deemed appropriate by the Contracting Officer Representative.

2. In each substitution request, identify the product and fabrication or installation method to be replaced. The related WMATA Standard Specification Section, Standard or RFP Drawing numbers, or approved Issued for Construction Drawing numbers shall be referenced in the submittal. Complete documentation showing compliance with the requirements for substitutions shall also be submitted including the following information as appropriate:

a. Product Data, including drawings, fabrication, and installation procedures.

b. Samples, where samples of the specified product are requested.

SECTION 04 43 15

GRANITE

PART 1 - GENERAL

1.01 RELATED DOCUMENTS

A. Drawings and general provisions of the Contract, including General and Supplementary Conditions and Division 01 Specification Sections, apply to this Section.

1.02 SUMMARY

A. Section Includes:

1. Granite for use in the following applications:
   a. Stair treads and landings.
   b. Paving and granite apron.
   c. Benches.
   d. Wall panels.
   e. Platform edge.
   f. Platform windscreen base.
   g. Granite thresholds.
   h. Accent pavers/tiles.
   i. Pylon aprons.

B. Related Requirements:

1. Section 03 30 00 "Cast-In-Place Structural Concrete."
2. Section 04 05 13 "Mortar, Grout and Masonry Accessories."
3. Section 05 12 00, "Structural Steel Framing."
4. Section 05 50 00, "Metal Fabrications."
5. Section 07 92 00 "Joint Sealants."
6. Section 08 80 00 "Glazing."

1.03 SUBMITTALS

A. Submit in accordance with Section 01 33 00 "Submittal Procedures."

B. Product Data: Submit manufacturer's technical data, catalog cuts, installation and maintenance instructions for all granite types required.

C. Shop Drawings:

1. Indicate bedding, bonding and jointing of granite, including typical and special anchoring, expansion-joint details and interface with other work.
2. Indicate dimensions and setting numbers of each stone in plan and elevation, including grading data for drainage.

D. Working Drawings:

1. Include full explanation of erection methods and installation procedures, temporary loading, anchor design, surface preparation, setting materials, bonding, testing and other work as directed.
2. For granite walls, include structural analysis data signed and sealed by the qualified professional structural engineer responsible for their preparation.

E. Samples for Verification:

1. Stone Samples: Submit three sets of samples of each type of granite used in the work, showing full range of color, texture, veining, fissures and finish of each type; each sample 12 inches square by one-inch thick. Include a minimum of two pieces in each set with maximum number of pieces in each set as necessary to demonstrate full range and variations.
   a. Material delivered or erected not within approved range samples will be rejected.
2. Epoxy for Mortar Dams and Epoxy Fill and for Setting Dowels: Manufacturer's standard container.
3. Non-staining Wedge. Stainless steel dowel.
4. Platform Edge Glass Lens and Sealant: Section 08 80 00.
   a. Cured six-inch long strip of grout matching existing white granite grout joint color for granite slab transverse joint grouting: Section 04 50 13.
   b. Platform Joint Sealant: Section 07 92 00.

F. Qualification Data: For firms and persons specified in "Quality Assurance" Article to demonstrate their capabilities and experience. Include lists of completed projects with project names and addresses, names and addresses of architects and owners, and other information specified.

1. Quality-Assurance Program.

G. Material Certificates: For each type and size of the following:

1. Granite: For each type of granite and application, include data on material properties and material test reports substantiating compliance with requirements.

H. Material Test Reports:

1. Stone Test Reports: For each stone variety proposed for use on Project, by a qualified testing agency, indicating compliance with required physical properties, other than abrasion resistance, according to referenced ASTM standards. Base reports on testing done within the previous three years.
2. For metal components, by a qualified testing agency, indicating chemical and physical properties of metal.
3. Sealant Compatibility and Adhesion Test Report: From sealant manufacturer complying with requirements in Section 07 92 00 "Joint Sealants" and indicating that sealants will not stain or damage stone. Include interpretation of test results and recommendations for primers and substrate preparation needed for adhesion.

I. Delegated-Design Submittal: For installed products indicated to comply with performance requirements and design criteria, including analysis data signed and sealed by the qualified professional engineer responsible for their preparation.

1.04 QUALITY ASSURANCE

A. Regulatory Requirements:

1. Comply with codes, laws and regulations of the authorities having jurisdiction (AHJ). Refer to Section 01 41 00 "Regulatory Requirements" for additional information.

B. Reference Standards and Specifications. Provide granite in compliance with the following industry standards and as specified.

1. ASTM International (ASTM):
   a. ASTM C97, "Standard Test Methods for Absorption and Bulk Specific Gravity of Dimension Stone."

b. ASTM C99, "Standard Test Method for Modulus of Rupture of Dimension Stone."
c. ASTM C170, "Standard Test Method for Compressive Strength of Dimension Stone."
d. ASTM C241, "Standard Test Method for Abrasion Resistance of Stone Subjected to Foot Traffic."
e. ASTM C615, "Standard Specification for Granite Dimension Stone."
f. ASTM C880, "Standard Test Method for Flexural Strength of Dimension Stone."
g. ASTM C1028, "Standard Test Method for Determining the Static Coefficient of Friction of Ceramic Tile and Other Like Surfaces by the Horizontal Dynamometer Pull-Meter Method."
h. ASTM C1242, "Standard Guide for Selection, Design, and Installation of Dimension Stone Attachment Systems."

2. ICC A117.1-2009 Accessible and Usage Buildings and Facilities.
3. National Building Granite Quarries Association (NBGQA): Specifications for Architectural Granite.

C. Source Limitations:

1. Obtain each variety of stone, regardless of finish, from a single quarry with resources to provide materials of consistent quality in appearance and physical properties.

D. Qualifications of Granite Quarries:

1. Quarry shall be a member company of the National Building Granit Quarries Association (NBGQA).
2. Obtain granite from quarries having capacity and facilities for furnishing the quantity, size and quality of granite required.

E. Installer Qualifications: An experienced installer who has completed dimension stone assemblies similar in material, design, and extent to those indicated for this Project and whose work has resulted in construction with a record of successful in-service performance.

F. Visual Matching:

1. Provide the product of one quarry matching approved samples.
2. Where specifications require matching an established or specied item, the Authoirty's decision will be final on whether a proposed product matches satisfactorily.
3. Where no product is available that adequately matches adjacent products or complies with the other specified requirements, comply with provisions of 01 25 00, Substitution Procedures, for selection of an alternate product.

G. Mock-Ups: Before installing granite edging, stairs and walls, construct mockups to verify selections made under Sample submittals and to demonstrate aesthetic effects and qualities of materials and execution. Build mockups to comply with the following requirements, using materials specified and indicated for completed work.

1. Granite Edging:
   a. Demonstration Installation:
      1) Demonstration installation to consist of three adjacent units to be installed in the work or as otherwise directed.
      2) Perform work as shown and in accordance with approved shop drawings and working drawings, using specified materials.
   b. Demonstration Installation Testing:
      1) In the presence of the Engineer and in accordance with approved working drawings, test each unit of the demonstration installation by placing end of crowbar at each end of unit and prying with a force that would lift an unbonded piece of stone with 50 psf live load. Protect stone from touching crowbar directly.

2) In the presence of the Engineer, before joint sealants are installed, test the bonded strength of each unit after two-hour cure time by applying an uplift load of 2,000 pounds at each drainage opening below the granite as approved.
3) If a unit fails to pass test by lifting or cracking of unit or setting bed, remove unit, revise setting procedures and reset unit. Repeat, as necessary, until approval is obtained.

c. Do not proceed with remainder of the work until demonstration installation, procedures and personnel are approved.

2. Stair Treads and Landings:
   a. Demonstration Installation Testing: #
      1) Prior to erection at site, test each stair tread and stair landing to withstand live load of 300 psf for duration of not less than 15 minutes. Test only components which perform a structural function and are not supported over their entire length by cast-in-place concrete.
3. Granite Walls:
   a. Build mockups of typical exterior wall with dimension stone cladding, approximately 72 inches long by 48 inches high or as directed by the Engineer.
   b. Show typical components, attachments to building structure, and methods of installation. Include sealant-filled joint complying with requirements in Section 07 92 00.
4. Acceptance of mockups is for color, texture, pattern, and blending; relationship of mortar and sealant colors to granite colors; tooling of joints; and aesthetic qualities of workmanship. #

H. Professional Structural Engineer Qualifications:

1. A professional structural engineer who is legally qualified to practice in jurisdiction where Project is located and who is experienced in providing engineering services of the kind indicated.
2. Engineering services are defined as those performed for installations of granite wall cladding systems, dimension stone assembles that are similar to those indicated for this Project in material, design, and extent. #

1.05 DELIVERY, STORAGE AND HANDLING

A. Pack granite so as to prevent damage in transit, and deliver in accordance with Contract schedule and setting sequence.

B. Deliver each piece of granite with code mark on unexposed face, corresponding to shop drawings using nonstaining paint. Deliver and unload granite. Prevent damage and soiling during delivery and unloading of granite.

C. Protect from disfiguring elements.

D. Separate granite from wood skids with polyethylene or other nonstaining material. Store under waterproof covering, and keep dry.

E. Remove rejected granite from jobsite immediately.

1.06 JOB CONDITIONS

A. Environmental Requirements:

1. Weather Limitations: Proceed with installation only when existing and forecasted weather conditions permit repointing work to be performed according to product manufacturers' written instructions and specified requirements.

2. Do not use frozen materials or materials mixed or coated with ice or frost. Remove and replace dimension stone cladding damaged by frost or freezing conditions.
3. Erection and pointing of granite when ambient temperature is below 50 Deg F and or tending to fall below 50 Deg F is prohibited.

B. Cold-Weather Requirements:

1. Protection:
   a. When night-time temperature is forecasted within 50 to 25 Deg F, cover dimension stone cladding with a weather-resistant membrane for 48 hours after construction.
   b. Do not install granite when night time temperature is forecasted below 25 Deg F.

C. Hot-Weather Requirements:

1. Protect mortar-joint pointing when temperature and humidity conditions produce excessive evaporation of water from mortar materials.
2. Provide artificial shade and wind breaks, and use cooled materials as required to minimize evaporation.
3. Do not apply mortar to substrates with temperatures of 90 deg F and above unless otherwise indicated.

PART 2 - PRODUCTS

2.01 PERFORMANCE REQUIREMENTS

A. Delegated Design: Engage a qualified professional engineer, as defined in Division 01, "General Requirements," to design dimension stone granite stone assemblies for the indicated and specified application.

B. Static Coefficient of Friction: ASTM C1028, ANSI A137.1, values as follows:

1. Level Surfaces: A minimum of 0.6.
2. Step Treads: A minimum of 0.6.
3. Ramp Surfaces: A minimum of 0.8.

C. General: Design stone anchors and anchoring systems according to ASTM C1242 “Standard Guide for Selection, Design, and Installation of Dimension Stone Attachment Systems.”

1. Stone anchors shall withstand not less than two times the weight of the stone cladding in both compression and tension.

D. Structural Performance: Dimension stone assemblies shall withstand the effects of gravity loads and the following loads and stresses within limits and under conditions indicated:

1. Wind Loads: As indicated on the Drawings.
2. Snow Loads: As indicated on the Drawings.
3. Live Loads: As indicated on the Drawings.
4. Equipment Loads: Allow for loads due to window cleaning and maintenance equipment.

E. Seismic Performance: Dimension stone assemblies shall withstand the effects of earthquake motions determined according to ASCE/SEI 7.

1. Component Importance Factor: 1.5.

F. Thermal Movements: Allow for thermal movements from ambient and surface temperature changes.

1. Temperature Change: 120 deg F, ambient; 180 deg F, material surfaces.

G. Safety Factors for Stone: Design dimension stone assemblies to withstand loads indicated without exceeding stone's allowable working stress determined by dividing stone's average ultimate strength, as established by testing, by the following safety factors: #

1. Safety Factor for Granite: 3.
2. Safety Factor for Concentrated Stresses: 4 for granite.

H. Design stone anchors to withstand loads indicated without exceeding allowable working stresses established by the following:

1. For Structural Steel: AISC 360.
2. For Cold-Formed Steel: AISI's "North American Specification for the Design of Cold-Formed Steel Structural Members."
3. For Cold-Formed Stainless Steel: ASCE 8, "Specification for the Design of Cold-Formed Stainless Steel Structural Members."
4. For Cast-in-Place and Post-installed Fasteners in Concrete: One-fourth of tested capacity when installed in concrete with compressive strength indicated.

I. Provisions for Fabrication and Erection Tolerances: Allow for fabrication and erection tolerances of building's structural system. Concrete fabrication and erection tolerances are specified in Section 03 30 00 "Cast-in-Place Concrete." Structural-steel fabrication and erection tolerances are specified in Section 05 12 00 "Structural Steel Framing."

J. Corrosion and Staining Control: Prevent galvanic and other forms of corrosion as well as staining by isolating metals and other materials from direct contact with incompatible materials. Materials shall not stain exposed surfaces of stone and joint materials.

K. Contrast Between Granite and Adjacent Floor Surfaces: Light reflectance contrast of specified granite shall measure 75% higher than adjacent floor material as tested by ASTM C609, "Standard Test Method for Measurement of Light Reflectance Value and Small Color Differences Between Pieces of Ceramic Tile".

2.02 MATERIALS

A. Granite:

1. Material Standards: #
   a. ASTM C615, “Standard Specification for Granite Dimension Stone.”
   b. NBGQA “Specifications for Architectural Granite”

2. Basis of Design Fabricator and Quarry: North Carolina Granite Corporation, Mount Airy, North Carolina, is specified to establish required level of quality, appearance, and performance. #
   a. Comparable granite from other quarries meeting the specified requirements will be considered for approval as a request for substitution under the provisions of Division 01.

3. Basis of Design Product: "White Mount Airy Granite".

a. Physical Characteristics:

Properties	Basis of Design – "Mt Airy Granite" Data (English units)	ASTM Test Method(s)
Absorption by Weight (%)	0.182	C97
Density, lbs/ft^3 , (kg/m^3)	164.01	C97
Compressive strength, psi, (MPa)	34,789	C170
Modules of rupture, Min psi	2,097	C99
Abrasion resistance, min.[A]	25	C241/C1353
Flexural strength, psi, (MPa)	2,557	C880

([A] Pertains only to stone subject to foot traffic)

4. Color Classification: White, granite matching grain, color and variegation of all white, medium-grain granite as listed in referenced NBGQA standard.

5. Color, Texture, Veining, Fissures and Pattern: Match Architect's samples located at the Authority's headquarters office.

6. Finishes: Exposed surfaces finished in accordance with the following and as shown:
   a. Type 1: Thermal finish or four-cut, slip-resistant.
   b. Type 2: Six-cut, stippled.
   c. Type 3: Honed-dull sheen without reflections.
   d. Type 4: Split face, nominal depth of 3-1/2 inches. Use Type 4 for all Granite Sets.
7. Where stone thickness permits, provide lewis holes for lifting stones weighing over 100 pounds. Make lewis holes not closer than two inches from finished face of stone nor in exposed portions of stone.
8. For alteration and restoration work, use granite salvaged from existing work. If salvaged granite is not sufficient, provide new granite to match existing granite in type, size and appearance.

B. Mortar Materials and Granite Accessories: Section 04 05 13.

C. Portland Cement Paste: Section 03 30 00.

D. Granite platform edge glass lenses and setting materials:

1. Glass Lenses: Salvage and reuse existing lenses to greatest extent possible. If Engineer determines existing lenses cannot be reused: Section 08 80 00.
2. Glass Lens Sealant: Section 08 80 00.
3. Lead Shims or Lead Rope: Section 08 80 00.

E. Dowels:

1. Salvage and reuse existing dowels to greatest extent possible.
2. If Engineer determines existing dowels cannot be reused:
   a. Dowels for Platform Edge Granite Slab Dowels: Section 04 05 13, minimum 1/2-inch diameter, of sufficient length to extend into stone 1/2 thickness of stone and to extend two inches into structural concrete.

F. Epoxy mortar and epoxy fill for mortar dams and epoxy for setting dowels for Granite Edge Slabs: Section 04 05 13.

G. Non-staining shim wedges to support granite slabs during curing of epoxy mortar dams: As approved by the Engineer.

H. Granite Sealer: Silicone-based repellent-treatment and sealer. Verify that product does not discolor granite and exhibits sufficient repellent characteristics.

1. Acceptable Manufacturers and Products:
   a. Prosoco SLX100 StandOff.
   b. HMK StoneCare.
   c. Miracle Sealants 511 Porous Plus.
   d. Or approved equal.

2.03 ANCHORS AND FASTENERS

A. Fabricate anchors, from stainless steel, ASTM A240 or ASTM A666, Type 316; temper as required to support loads imposed without exceeding allowable design stresses. Fabricate dowels and pins for anchors from stainless steel, ASTM A276, Type 316.

B. Cast-in-Place Concrete Inserts: Either threaded or wedge type unless otherwise indicated; galvanized ferrous castings, either ASTM A47 malleable iron or ASTM A27 cast steel, with capability to sustain, without failure, a load equal to 4 times the loads imposed as determined by testing per ASTM E488, conducted by a qualified independent testing agency. Provide bolts, washers, and shims as needed, all hot-dip galvanized per ASTM F2329.

C. Postinstalled Anchor Bolts for Concrete and Masonry: [Chemical anchors] [torque-controlled expansion anchors] [or] [undercut anchors] made from stainless-steel components complying with ASTM F593 and ASTM F594, Alloy Group 1 or 2 for bolts and nuts; ASTM A240, ASTM A276, or ASTM A666, Type 304 or 316, for anchors, with capability to sustain, without failure, a load equal to 4 times the loads imposed, for concrete, or 6 times the load imposed, for masonry, as determined by testing per ASTM E488, conducted by a qualified independent testing agency.

D. Threaded Fasteners: Heavy hexagon structural bolts, heavy hexagon nuts, and hardened washers.

E. For stainless steel, use annealed stainless-steel bolts, nuts, and washers; for bolts, ASTM F593; and for nuts, ASTM F594, Alloy [Group 1] [Group 2].

F. For [galvanized-steel shelf angles] [and] [backup structure], use carbon-steel bolts, nuts, and washers all hot-dip or mechanically zinc coated:
   1. For bolts, ASTM A307, Grade A.
   2. For nuts, ASTM A563, Grade A.
   3. For washers, ASTM F436.

G. Weld Plates for Installation in Concrete: Comply with Section 05 50 00 "Metal Fabrications."

PART 3 - EXECUTION

3.01 EXAMINATION

A. Examine surfaces to receive dimension stone assemblies and conditions under which dimension stone will be installed, with Installer present, for compliance with requirements for installation tolerances and other conditions affecting performance.

B. For the record, prepare written report, endorsed by Installer, listing conditions detrimental to performance of dimension stone assemblies.

C. Proceed with installation only after unsatisfactory conditions have been corrected.

3.02 PREPARATION

A. Runways, Scaffolds and Hoists: Provide and move scaffolding, temporary runways, temporary floors, staging and hoists in accordance with specified safety requirements.

B. Substrate: Remove foreign substances that would affect bond of mortar from surfaces to receive granite.

C. Advise installers of other work about specific requirements for placement of inserts, flashing reglets, and similar items to be used by dimension stone Installer for anchoring, supporting, and flashing of dimension stone assemblies system. Furnish installers of other work with Drawings or templates showing locations of these items. # #

3.03 FABRICATION AND ERECTION

A. General:

1. Fabricate granite in sizes and with joint patterns shown on Contract Drawings and approved shop drawings.
2. Installation of granite which is not within the approved range of color, texture, finish, veining and fissures, is mismatched, shows flaws or imperfection in cutting, or has other defects, is prohibited.
3. Provide openings for installation of work of other trades in accordance with approved shop drawings. Coordinate size of rabbet at expansion joint in granite platform edging with the expansion joint dimension and the size of compression seal.
4. Provide 1/4-inch joints, unless otherwise shown on Contract Drawings and approved shop drawings.
5. Unless otherwise shown, completely fill joints in granite work and rake out to depth of 3/4 inch, except paving joints and pylon-apron joints showing grout.
6. Set stones accurately in alignment with other stones and adjacent work. Set stones in full mortar beds. Level and plumb stones as work progresses.
7. Set finish surfaces in true and even planes, with uniform jointing. Take up and reset loose, hollow sounding slabs. Leave surface free of mortar stain and other defacements.
8. Where epoxy materials are used, follow manufacturer's recommendations.

B. Tolerances: Meet NBGQA Specifications for Architectural Granite.

C. Granite Paving Over Waterproofing:

1. Carefully place granite and setting materials over waterproofing so protection materials are not displaced and waterproofing is not punctured or otherwise damaged.
2. Replace protection materials that become displaced and arrange for repair of damaged waterproofing before covering with paving.
3. Provide cork joint filler in accordance with Section 07 92 00, where indicated, at waterproofing that is turned up on vertical surfaces or, if not indicated, provide temporary filler or protection until granite paving installation is complete.

D. Application of Granite Treads to Concrete Stringers and Intermediate Landings:

1. Set granite with epoxy mortar in accordance with recommendations of epoxy-mortar manufacturer, Section 04 05 13 Mortar, Grout and Masonry Accessories, and with approved quality assurance program.
2. Set dowels with epoxy mortar not less than 1-1/2 inches into granite. Allow mortar to cure to not less than 75 percent of its ultimate compressive strength. Field drill dowels into concrete stringers.

3. Place epoxy mortar as indicated. Adjust as required to obtain full contact of epoxy mortar with granite. Apply epoxy mortar in a self-leveling consistency. Set granite, embedding it into epoxy mortar, with top of each tread dead-level flat. Slope stair landings as indicated on the Drawings.

E. Paving and Granite Apron at Pylons:

1. Do not put down more setting bed than can be covered in the same day.
2. Dust setting bed with portland cement and butter underside of stone with neat portland cement paste in accordance with Section 03 30 00 and pound into place at proper elevation.
3. Where concrete is to be cast against stone, parge contact surface with not less than 1/2 inch of nonstaining setting mortar in accordance with Section 04 05 13.

F. Benches: Provide bench seats and backs in one piece with no joints.

G. Application to Floor Hatches and Other Metal Items:

1. Apply granite to recessed floor hatches and other metal surfaces by the use of epoxy mortar in accordance with Section 04 05 13.
2. Use epoxy of type and brand recommended by manufacturer to set granite on metal and in accordance with Section 04 05 13. Continue paving pattern of adjacent surfaces over hatch covers.

H. Application of Granite Platform Edging:

1. Set granite at platform edge to comply with WMATA, “Manual of Design Criteria” for vertical and horizontal alignment with top of rail and center line of track to platform edge respectively.
2. Set granite with epoxy mortar in accordance with recommendations of epoxy manufacturer, and with Section 04 05 13 and with approved quality-assurance program.
3. Set dowels with epoxy mortar not less than 1-1/2 inches into granite. Allow mortar to cure to not less than 75 percent of its ultimate compressive strength.
4. Place epoxy mortar as shown, using mortar dams or other approved method of forming. Adjust as required to obtain full contact of epoxy mortar with granite. Apply epoxy mortar in a self-leveling consistency. Set granite, embedding it into epoxy mortar. To permit drainage, maintain spaces between mortar dams as shown.
5. Expansion joints: Coordinate the distance between granite edge stones with the required expansion joint size (width) for the temperature of the structure at the time stones are set. See structural drawings.
6. Install light fixtures, lamps in accordance with Division 16, Electrical, and as indicated on the drawings, and install lead shims, glass lenses, and seal lenses in accordance with Section 08 80 00.

I. Granite Sets:

1. As shown on the Drawings.

J. Wall Panels:

1. Fabrication: Fabricate granite wall units in sizes and shapes required to comply with requirements indicated, including details on Drawings and Shop Drawings.
   a. Cut and drill sinkages and holes in granite for anchors, fasteners, supports, and lifting devices as indicated or needed to set stone securely in place; shape beds to fit supports.
   b. Cut granite to produce pieces of thickness, size, and shape indicated and to comply with fabrication and construction tolerances recommended by applicable stone association or, if none, by stone source, for faces, edges, beds, and backs.

c. Minimum Thickness: 1-1/2 inches.
d. Cut granite panels to produce joints of uniform width and in locations indicated.
e. Provide minimum anchorage as follows and in accordance with standard practice:
   1) Not less than one anchor for every six square feet of stone.
   2) Minimum of two anchors at each head and bed joint.

3.04 POINTING AND CLEANING

A. Pointing:

1. After setting mortar has cured, point voids in joints of exposed granite paving and pylon aprons with preshrunk mortar. Remove excess mortar.
2. Seal joints in granite work with sealants in accordance with Section 07 92 00, except paving joints and pylon-apron joints.

B. Cleaning:

1. Clean joint surfaces and remove dirt, coatings, moisture and other foreign substances which could interfere with bond. Recaulk granite edge slabs' transverse joints both vertically and horizontally with grout and let cure.
2. Thoroughly and carefully clean work by approved means and leave in first class condition, free from mortar or other defacement. Clean all exposed granite surfaces, including joints, with water and washing compound soap powder solution in accordance with recommendations of manufacturer. Sponge and wash thoroughly. Use of acid or acid cleaners is prohibited. Remove stains by approved means. Clean granite masonry surfaces, including those grouted or sealed, with soap-powder solution and fiber brushes to remove stains. Thoroughly and carefully clean work and leave in first-class condition, free from mortar stains or other defacement. Immediately after cleaning, rinse surfaces with clear water. Polish with clean dry cloths.

C. Protection:

1. Protect granite work from damage after erection. Provide protective boxing or other suitable means whenever necessary in the absence of specific instructions from the Engineer. Do not use materials that will stain or deface granite. Use galvanized nails in protective boxing.
2. Continuously protect granite work from water during construction and until installation is complete and is approved.
3. Protect granite work from traffic of any kind for not less than two hours after setting. Remove protection immediately after two hours curing.
4. Treat Granite surfaces with silicone-based water and stain repellent, per repellent manufacturer’s recommendations.

3.05 FIELD QUALITY ASSURANCE

A. Granite Platform Edging:

1. Perform work in accordance with approved quality-assurance program.
2. Change of procedures and personnel without approval is prohibited.

END OF SECTION

1 STATION OVERHEAD PERSPECTIVE LOOKING SW

NOTE:
SEE CIVIL SITE PLANS FOR LOCATION AND ORIENTATION OF THE NORTH ENTRANCE PAVILION. SEE GLEBE RD ENTRANCE PAVILION ARCHITECTURAL DRAWINGS FOR NORTH ENTRANCE PAVILION DESIGN INTENT.

CONTRACT NO. -

DESIGNED	E. MARSH	05/18/16 DATE
DRAWN	E. MARSH	06/24/16 DATE
CHECKED	F. PARAON	06/29/16 DATE
APPROVED	B. GALLAGHER	11/07/16 DATE

REFERENCE DRAWINGS

NUMBER	DESCRIPTION

REVISIONS

DATE	BY	DESCRIPTION
03/08/17	EM	REVISED AM-3

WASHINGTON METROPOLITAN AREA TRANSIT AUTHORITY

DEPARTMENT OF TRANSIT INFRASTRUCTURE AND ENGINEERING SERVICES
OFFICE OF THE CHIEF ENGINEER, INFRASTRUCTURE

SUBMITTED DATE

APPROVED DIRECTOR DATE

POTOMAC YARD METRORAIL STATION

ARCHITECTURAL
OVERHEAD PERSPECTIVE

SCALE:

DRAWING NO. C8e-A-005

SHEET NO. 75 OF 142

3/7/2017 11:09:28 AM P:\1202_Potomac Yard_30% Design\1200_Drawings\1225_Revit\PotomacYard_Alt B_170306_KGP_Central_Amendment01.rvt

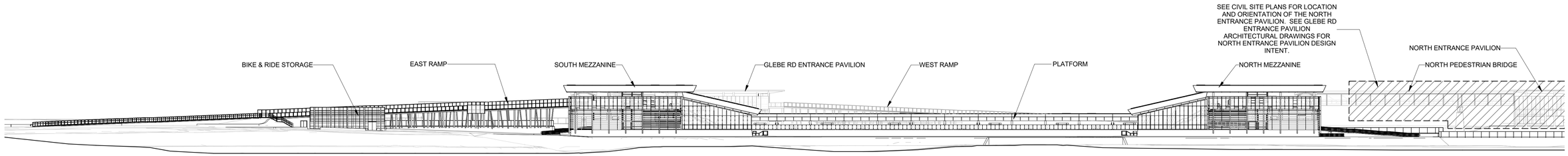

2 STATION EAST ELEVATION - OVERALL

1" = 50'-0" 0' 25' 50' 100'

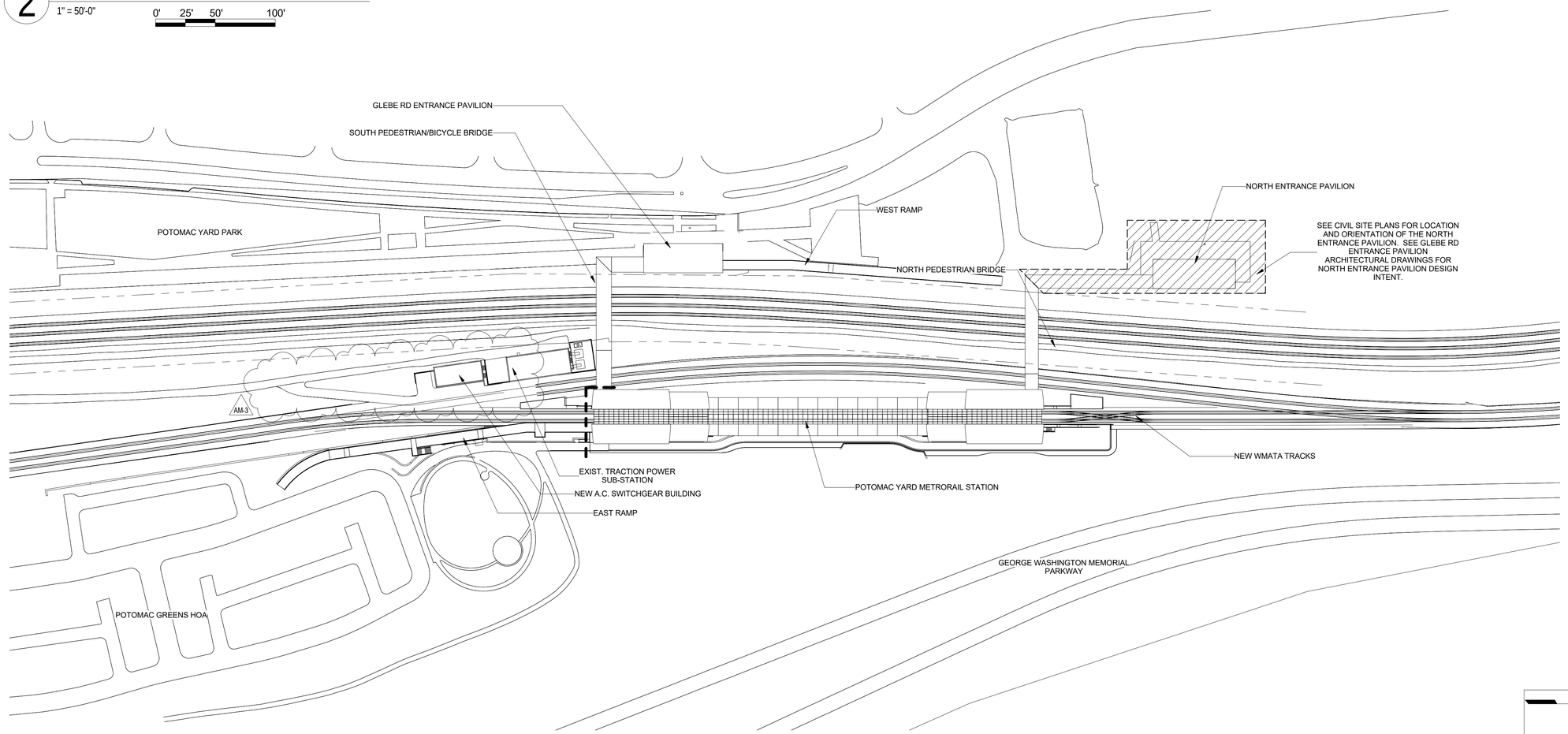

1 STATION PLAN - OVERALL

1" = 100'-0" 0' 50' 100' 200'

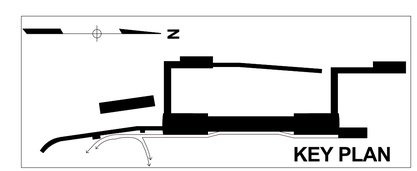

CONTRACT NO.
-

DESIGNED	E. MARSH	05/18/16
DRAWN	E. MARSH	06/24/16
CHECKED	F. PARAON	06/29/16
APPROVED	B. GALLAGHER	11/07/16

REFERENCE DRAWINGS

NUMBER	DESCRIPTION

REVISIONS

DATE	BY	DESCRIPTION
03/08/17	EM	REVISED AM-3

WASHINGTON METROPOLITAN AREA TRANSIT AUTHORITY

DEPARTMENT OF TRANSIT INFRASTRUCTURE AND ENGINEERING SERVICES
OFFICE OF THE CHIEF ENGINEER, INFRASTRUCTURE

SUBMITTED _____ DATE

APPROVED _____ DIRECTOR DATE

POTOMAC YARD METRORAIL STATION

ARCHITECTURAL
SITE PLANS

SCALE:	DRAWING NO.	SHEET NO.
As indicated	C8e-A-010	79 OF 142

3/7/2017 11:10:45 AM P:\1202_Potomac Yard_30% Design\1200_Drawings\1225_Rev\{PotomacYard_Alt B_170306_KGP_Central_Amendment01.rvt

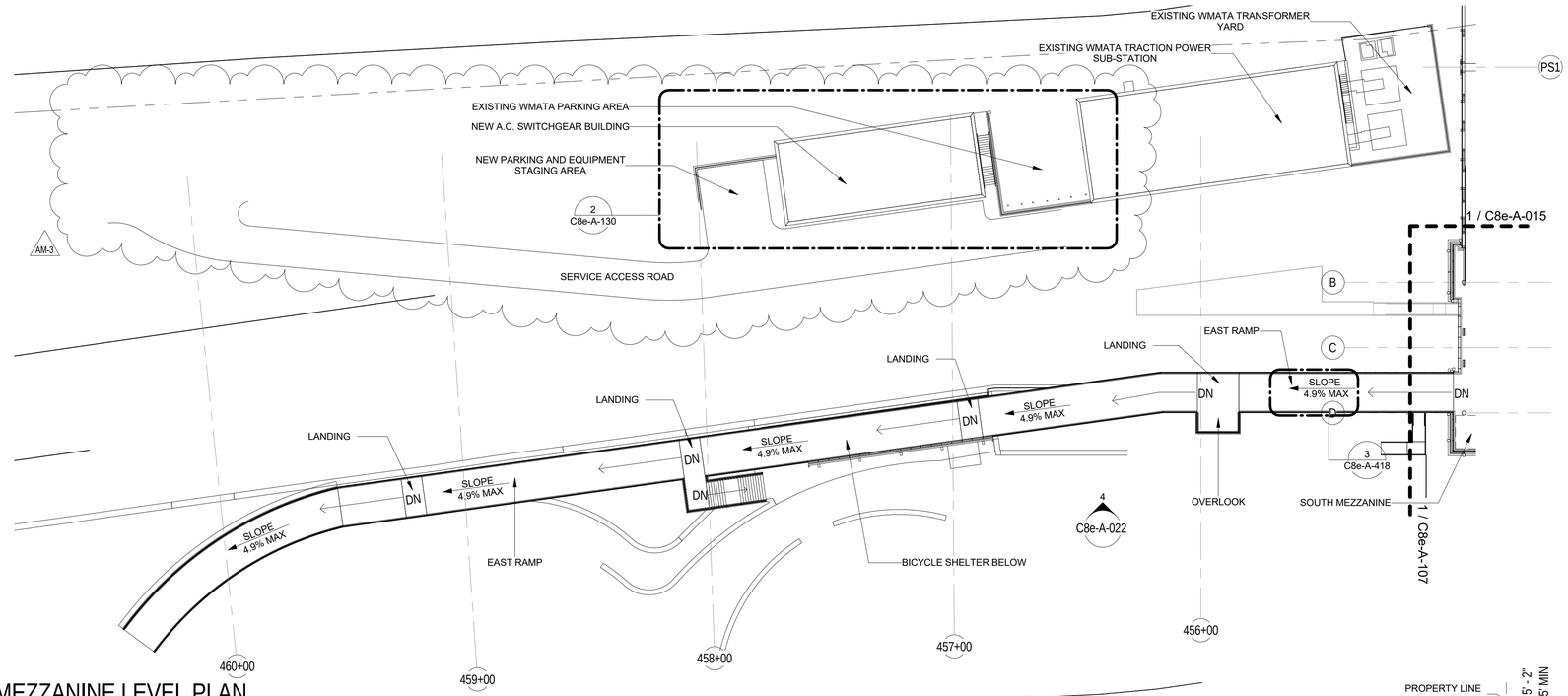

2 EAST RAMP MEZZANINE LEVEL PLAN

1" = 30'-0"

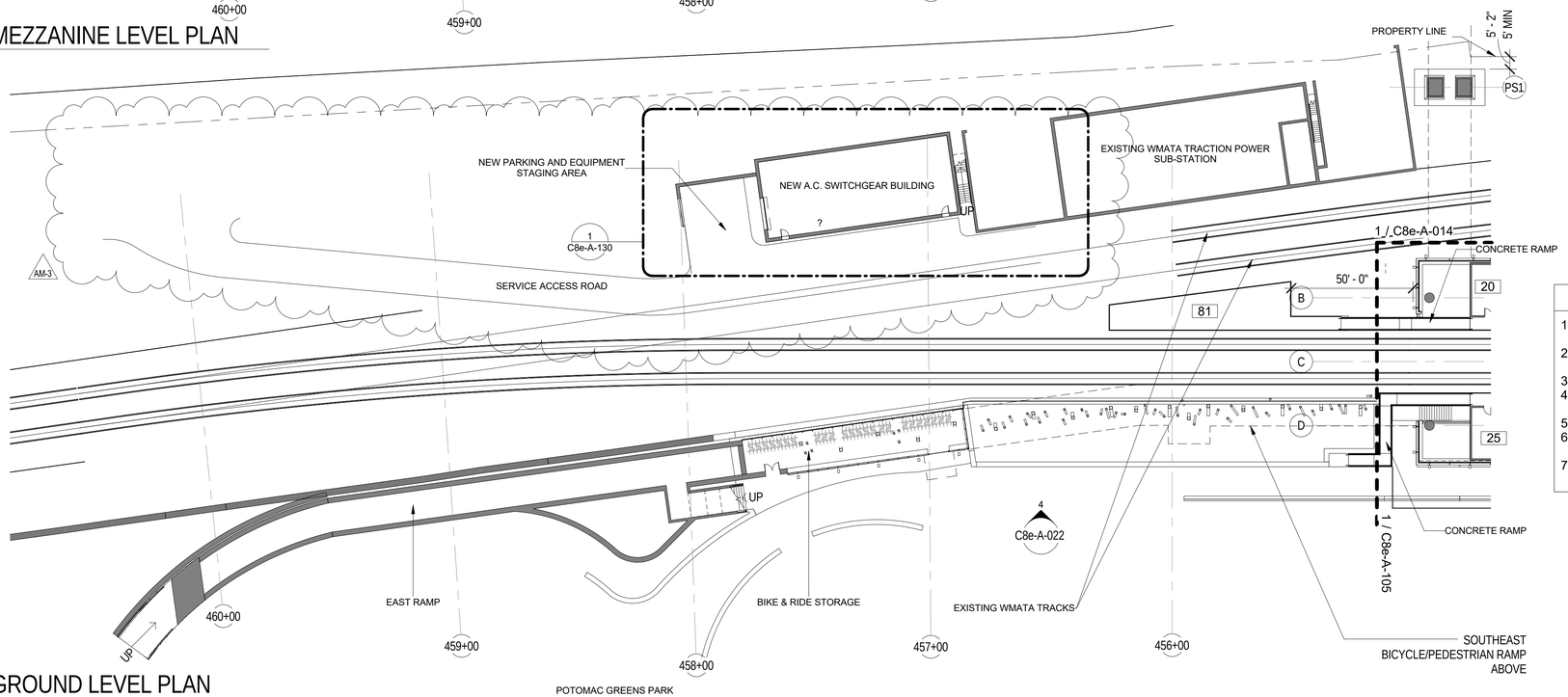

1 EAST RAMP GROUND LEVEL PLAN

1" = 30'-0"

GENERAL NOTES - PLANS

1. ALL SHOWN DIMENSIONS ARE MANDATORY. ANY DEVIATIONS SHALL BE APPROVED BY WMATA.
2. ROOMS/SPACE SIZE, PROPORTIONS, LOCATIONS AND ADJACENCIES AS SHOWN ARE MANDATORY. ANY DEVIATIONS SHALL BE APPROVED BY WMATA.
3. REFER TO SHEET C8e-A-003 FOR MATERIALS AND FINISHES SCHEDULE.
4. UNLESS NOTED OTHERWISE, ALL SINGLE DOORS SHALL BE 3'-0" WIDE BY 7'-0" HIGH AND ALL DOUBLE DOORS 6'-0" WIDE BY 8'-0" HIGH.
5. UNLESS NOTED OTHERWISE, ALL WALLS ARE TO BE CONCRETE.
6. SEE STATION LONGITUDINAL SECTIONS FOR ADDITIONAL SIGNAGE AND FURNISHINGS LOCATIONS.
7. REFER TO WMATA METRORAIL SYSTEM SIGNAGE DESIGN MANUAL FOR ALL SIGNAGE INFORMATION NOT SHOWN.

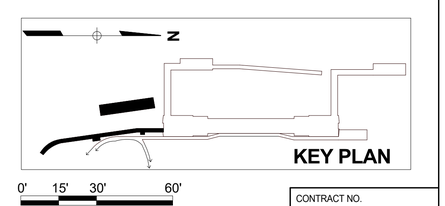

CONTRACT NO.
-

DESIGNED	E. MARSH	05/18/16 DATE
DRAWN	E. MARSH	06/24/16 DATE
CHECKED	F. PARAON	06/29/16 DATE
APPROVED	B. GALLAGHER	11/07/16 DATE

REFERENCE DRAWINGS

NUMBER	DESCRIPTION

REVISIONS

DATE	BY	DESCRIPTION
03/08/17	EM	REVISED AM-3

WASHINGTON METROPOLITAN AREA TRANSIT AUTHORITY

DEPARTMENT OF TRANSIT INFRASTRUCTURE AND ENGINEERING SERVICES
OFFICE OF THE CHIEF ENGINEER, INFRASTRUCTURE

SUBMITTED _____ DATE

APPROVED _____ DIRECTOR DATE

POTOMAC YARD METRORAIL STATION

ARCHITECTURAL
EAST RAMP PLANS

SCALE:	DRAWING NO.	SHEET NO.
As indicated	C8e-A-016	85 OF 142

P:\1202_Potomac Yard_30% Design\1200_Drawings\1225_Revit\PotomacYard_Alt B_170306_KGP_Central_Amendment01.rvt
3/7/2017 11:11:02 AM

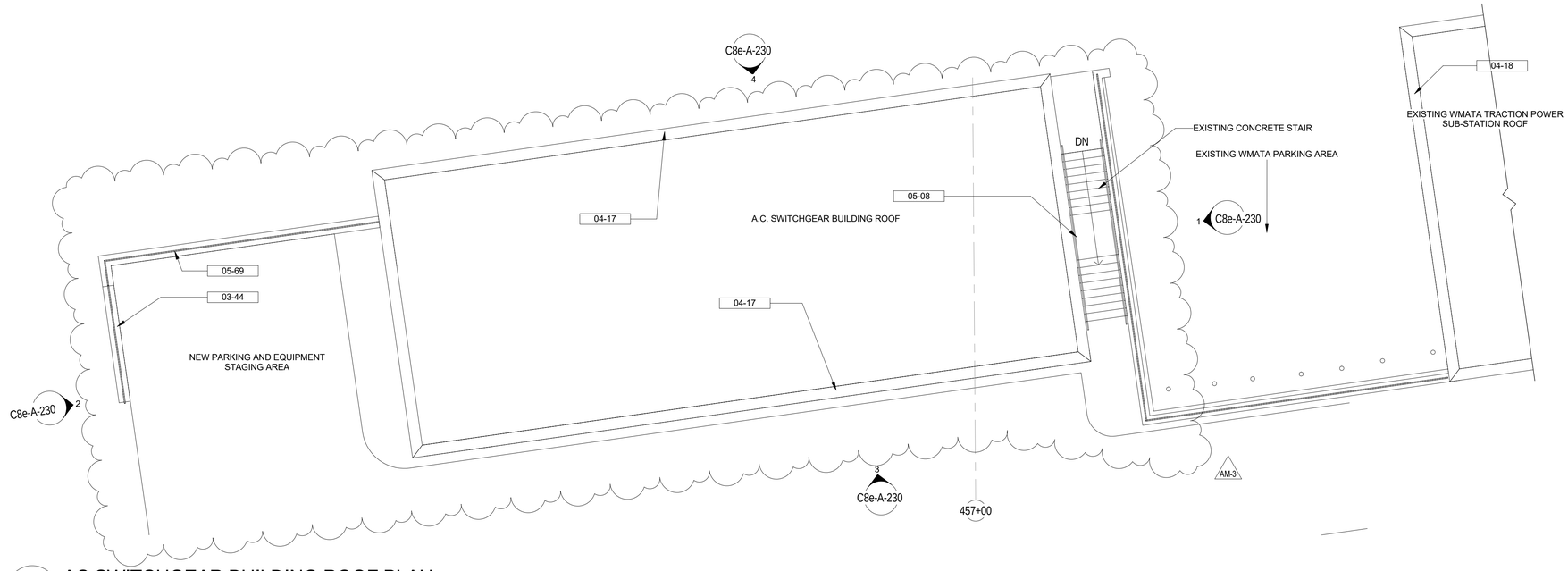

2 AC SWITCHGEAR BUILDING ROOF PLAN

1/8" = 1'-0"

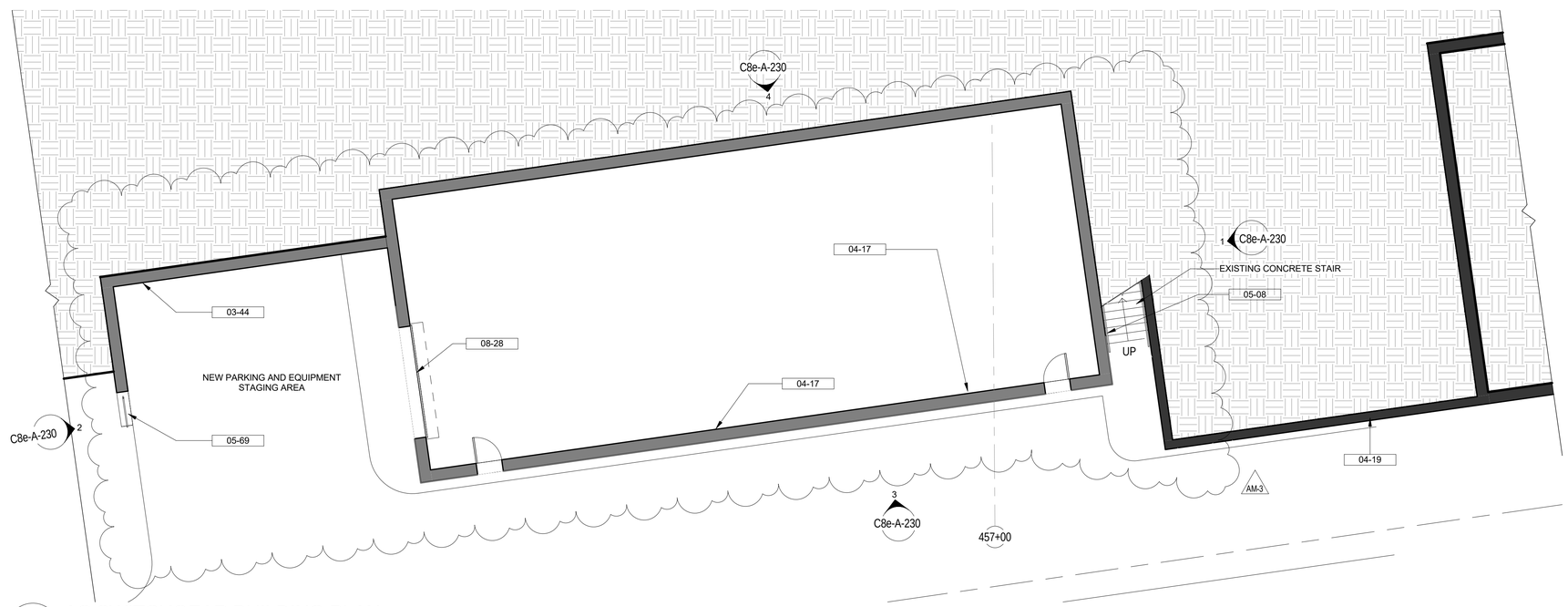

1 AC SWITCHGEAR BUILDING PLAN

1/8" = 1'-0"

KEYNOTE LEGEND	
NOTE	DESCRIPTION
03-44	16" CONCRETE RETAINING WALL
04-17	NEW CONCRETE WALL WITH BRICK VENEER. BRICK VENEER TO MATCH EXISTING WMATA TRACTION POWER SUB-STATION BRICK.
04-18	EXISTING CONCRETE & BRICK WALL
04-19	EXISTING CONCRETE WALL
05-08	1 1/2" DIA. GALV. STEEL PIPE HANDRAIL. RADIUS ALL BENDS, PAINTED
05-69	GALVANIZED STEEL GUARDRAIL. SEE WMATA DESIGN CRITERIA FOR MORE INFORMATION
08-28	13'-0"X14'-0" OVERHEAD ROLLING DOOR

GENERAL NOTES - PLANS

1. ALL SHOWN DIMENSIONS ARE MANDATORY. ANY DEVIATIONS SHALL BE APPROVED BY WMATA.
2. ROOMS/SPACE SIZE, PROPORTIONS, LOCATIONS AND ADJACENCIES AS SHOWN ARE MANDATORY. ANY DEVIATIONS SHALL BE APPROVED BY WMATA.
3. REFER TO SHEET C8e-A-003 FOR MATERIALS AND FINISHES SCHEDULE.
4. UNLESS NOTED OTHERWISE, ALL SINGLE DOORS SHALL BE 3'-0" WIDE BY 7'-0" HIGH AND ALL DOUBLE DOORS 6'-0" WIDE BY 8'-0" HIGH.
5. UNLESS NOTED OTHERWISE, ALL WALLS ARE TO BE CONCRETE.
6. SEE STATION LONGITUDINAL SECTIONS FOR ADDITIONAL SIGNAGE AND FURNISHINGS LOCATIONS.
7. REFER TO WMATA METRORAIL SYSTEM SIGNAGE DESIGN MANUAL FOR ALL SIGNAGE INFORMATION NOT SHOWN.

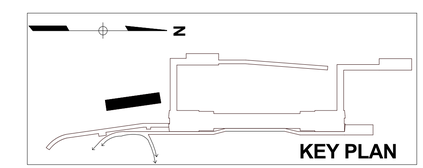

0' 4' 8' 16'

CONTRACT NO. -

DESIGNED	E. MARSH	05/18/16 DATE
DRAWN	A. DEILAMI	06/24/16 DATE
CHECKED	F. PARAON	06/29/16 DATE
APPROVED	B. GALLAGHER	11/07/16 DATE

REFERENCE DRAWINGS

NUMBER	DESCRIPTION

REVISIONS

DATE	BY	DESCRIPTION
03/08/17	EM	REVISED AM-3

WASHINGTON METROPOLITAN AREA TRANSIT AUTHORITY

DEPARTMENT OF TRANSIT INFRASTRUCTURE AND ENGINEERING SERVICES
OFFICE OF THE CHIEF ENGINEER, INFRASTRUCTURE

SUBMITTED _____ DATE

APPROVED _____ DIRECTOR DATE

POTOMAC YARD METRORAIL STATION

ARCHITECTURAL
AC SWITCHGEAR BUILDING PLANS

SCALE: As indicated

DRAWING NO. C8e-A-130

SHEET NO. 103 OF 142

3/7/2017 11:11:05 AM P:\1202_Potomac Yard_30% Design\1200_Drawings\1225_Revit\PotomacYard_Alt B_170306_KGP_Central_Amendment01.rvt

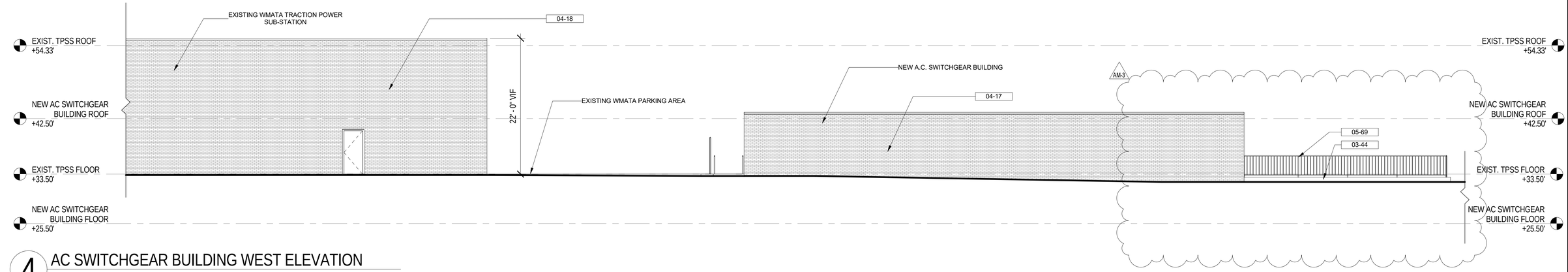

4 AC SWITCHGEAR BUILDING WEST ELEVATION

1/8" = 1'-0"

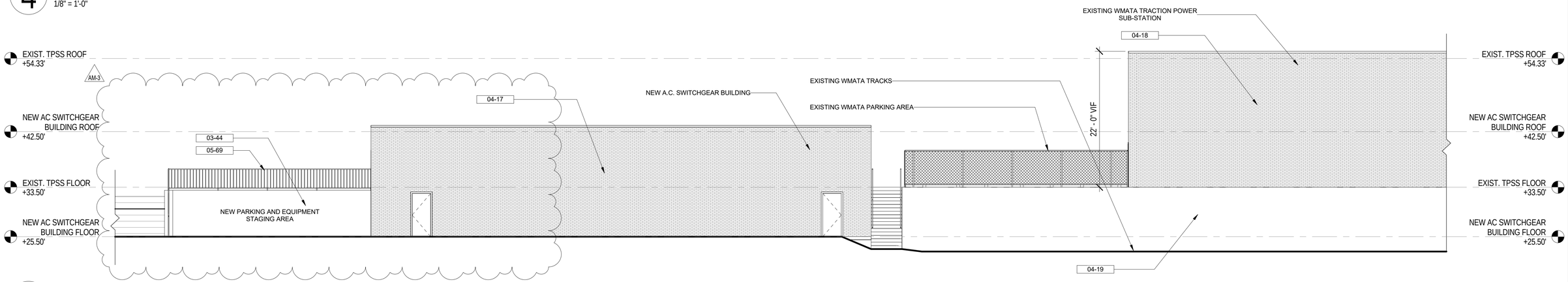

3 AC SWITCHGEAR BUILDING EAST ELEVATION

1/8" = 1'-0"

KEYNOTE LEGEND	
NOTE	DESCRIPTION
03-44	16" CONCRETE RETAINING WALL
04-17	NEW CONCRETE WALL WITH BRICK VENEER. BRICK VENEER TO MATCH EXISTING WMATA TRACTION POWER SUB-STATION BRICK.
04-18	EXISTING CONCRETE & BRICK WALL
04-19	EXISTING CONCRETE WALL
05-08	1 1/2" DIA. GALV. STEEL PIPE HANDRAIL. RADIUS ALL BENDS, PAINTED
05-69	GALVANIZED STEEL GUARDRAIL. SEE WMATA DESIGN CRITERIA FOR MORE INFORMATION
08-28	13'-0"X14'-0" OVERHEAD ROLLING DOOR

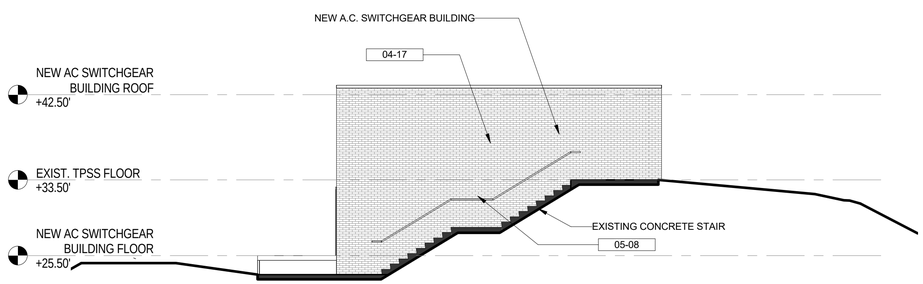

1 AC SWITCHGEAR BUILDING NORTH ELEVATION

1/8" = 1'-0"

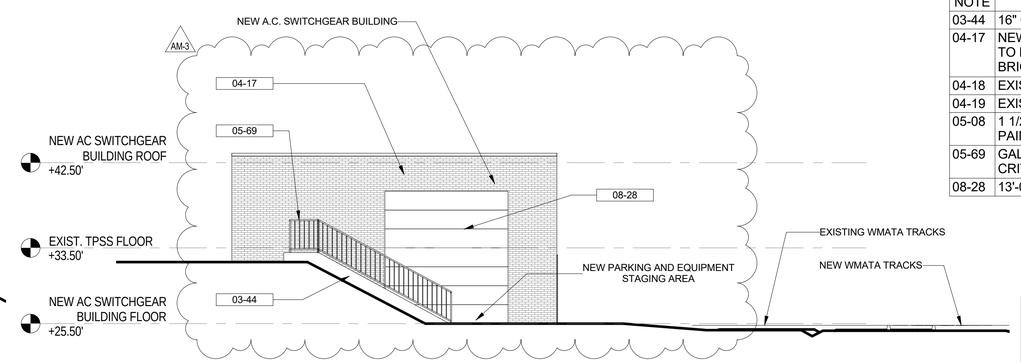

2 AC SWITCHGEAR BUILDING SOUTH ELEVATION

1/8" = 1'-0"

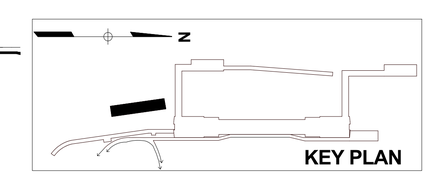

0' 4' 8' 16'

CONTRACT NO. -

DESIGNED	E. MARSH	05/18/16 DATE
DRAWN	A. DEILAMI	06/24/16 DATE
CHECKED	F. PARAON	06/29/16 DATE
APPROVED	B. GALLAGHER	11/07/16 DATE

REFERENCE DRAWINGS

NUMBER	DESCRIPTION

REVISIONS

DATE	BY	DESCRIPTION
03/08/17	EM	REVISED AM-3

WASHINGTON METROPOLITAN AREA TRANSIT AUTHORITY

DEPARTMENT OF TRANSIT INFRASTRUCTURE AND ENGINEERING SERVICES
OFFICE OF THE CHIEF ENGINEER, INFRASTRUCTURE

SUBMITTED _____ DATE

APPROVED _____ DIRECTOR DATE

POTOMAC YARD METRORAIL STATION

ARCHITECTURAL
AC SWITCHGEAR BUILDING ELEVATIONS

SCALE: 1/8" = 1'-0"

DRAWING NO. C8e-A-230

SHEET NO. 118 OF 142

3/7/2017 11:11:13 AM P:\1202_Potomac Yard_30% Design\1200_Drawings\1225_Revit\PotomacYard_Alt B_170306_KGP_Central_Amendment01.rvt

WMATA CONFIDENTIAL INFORMATION - DO NOT DISCLOSE WITHOUT EXPRESS WRITTEN APPROVAL OF THE GENERAL MANAGER OF THE AUTHORITY

BILL OF MATERIAL		
ITEM. NO.	QTY	
1	LOT	TYPE B PROTECTION COVER ASSEMBLY
2	LOT	COMPOSITE RAIL
3	1	PLASTIC UMBRELLA INSULATOR (TYP.–SEE NOTE 1)
4	2	TIMBER DRIVE OR SCREW SPIKE 1/2" DIA. x 6 1/2" LG. GALVANIZED STEEL

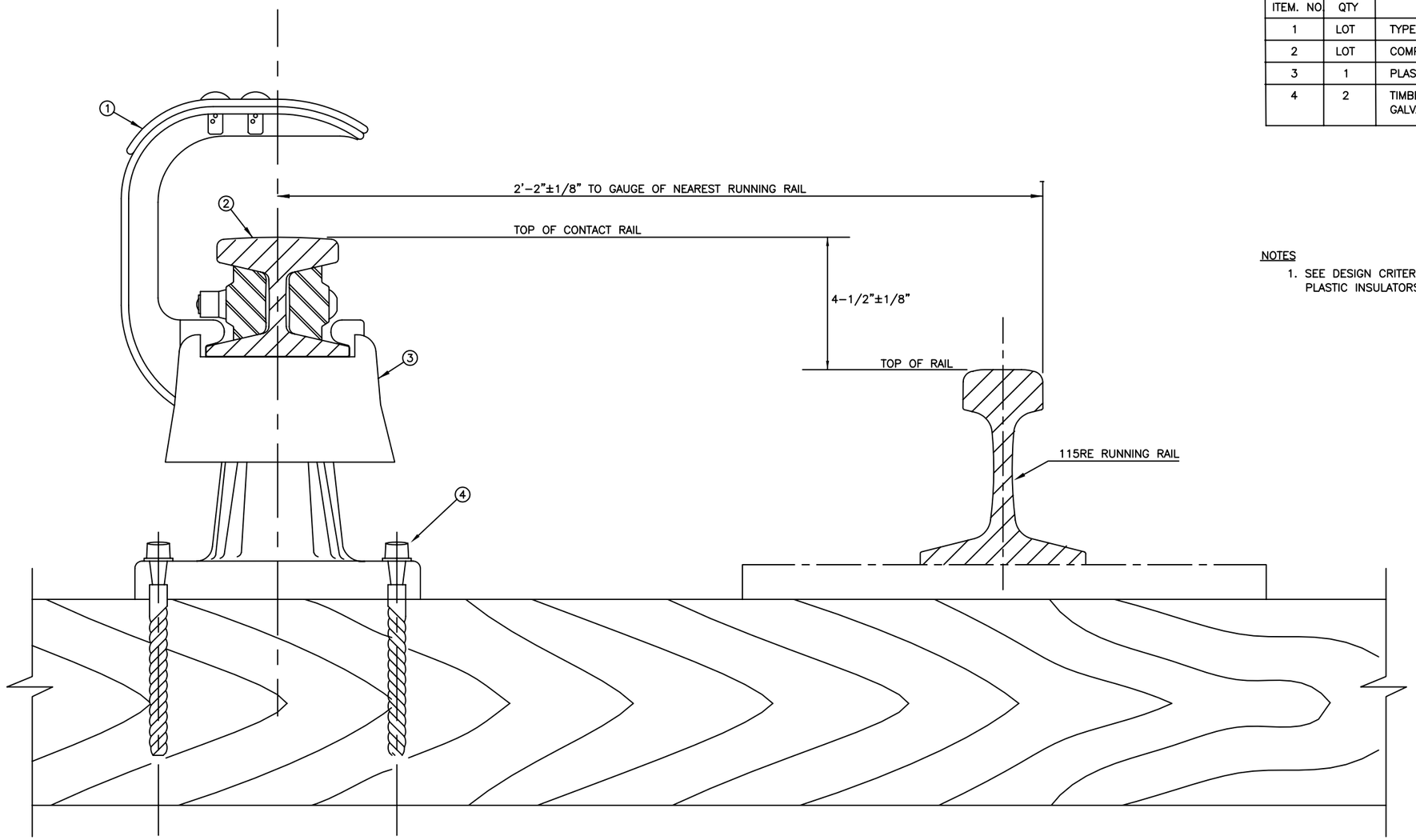

NOTES

1. SEE DESIGN CRITERIA FOR USE OF PLASTIC INSULATORS.

CONTACT RAIL MOUNTING ARRANGEMENT
FOR BALLASTED TRACKS

DESIGNED	W. TINKHAM	6–98 DATE
DRAWN	A. DAVIS	08/06 DATE
CHECKED	R.ROCKEFELLER	11/06 DATE
APPROVED	L. PADGETT	11/06 DATE

REFERENCE DRAWINGS	
NUMBER	DESCRIPTION

REVISIONS		
DATE	BY	DESCRIPTION
06/2007	CENF	UPDATED TO PLASTIC UMBRELLA INSULATOR BASE

WASHINGTON METROPOLITAN AREA TRANSIT AUTHORITY

OFFICE OF ENGINEERING SUPPORT SERVICES

SUBMITTED LRPadgett 10/2007 DATE

APPROVED 10/2007 DATE

CONTACT RAIL DESIGN DRAWING
COMPOSITE RAIL
ASSEMBLY–BALLASTED TRACK

SCALE 1/2"= 1"

DRAWING NO. DD–TW–CR–002

WMATA CONFIDENTIAL INFORMATION - DO NOT DISCLOSE WITHOUT EXPRESS WRITTEN APPROVAL OF THE GENERAL MANAGER OF THE AUTHORITY

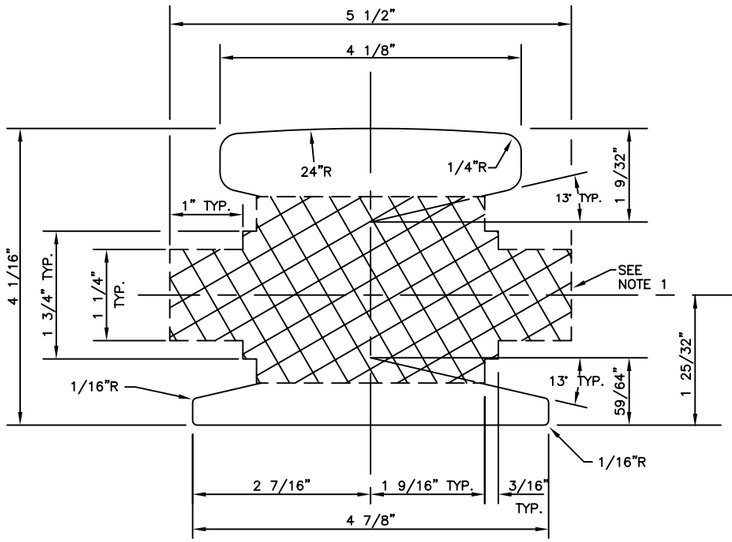

COMPOSITE RAIL
CLEARANCE ENVELOPE
SCALE: 1"=0'-1"

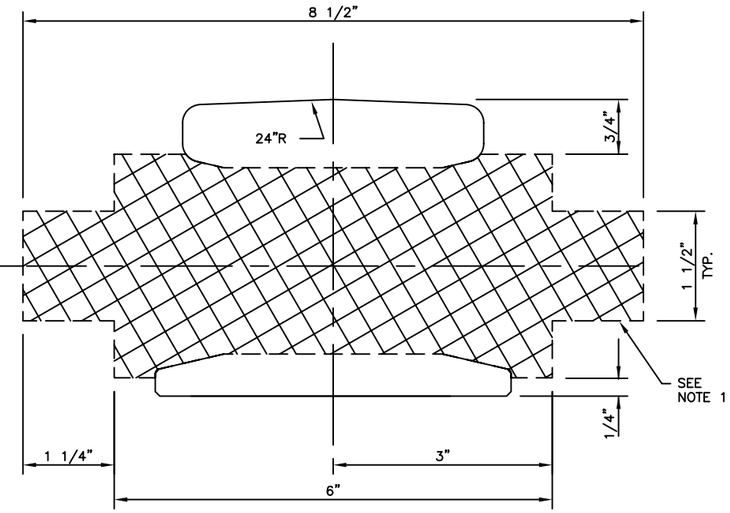

COMPOSITE RAIL
CLEARANCE ENVELOPE
AT SPLICE JOINT
SCALE: 1"=0'-1"

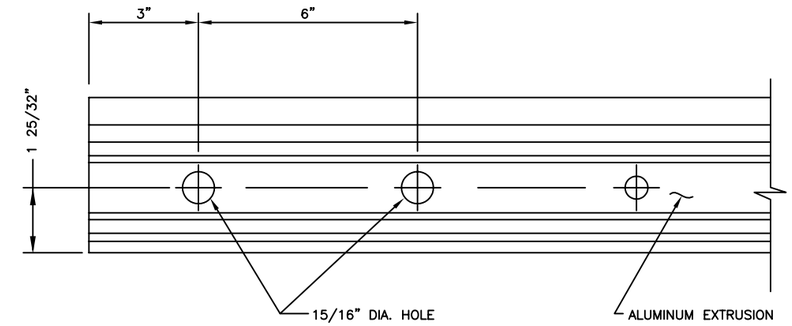

DETAIL "A"
(TYPICAL EACH END)
SCALE: 1/2"=0'-1"

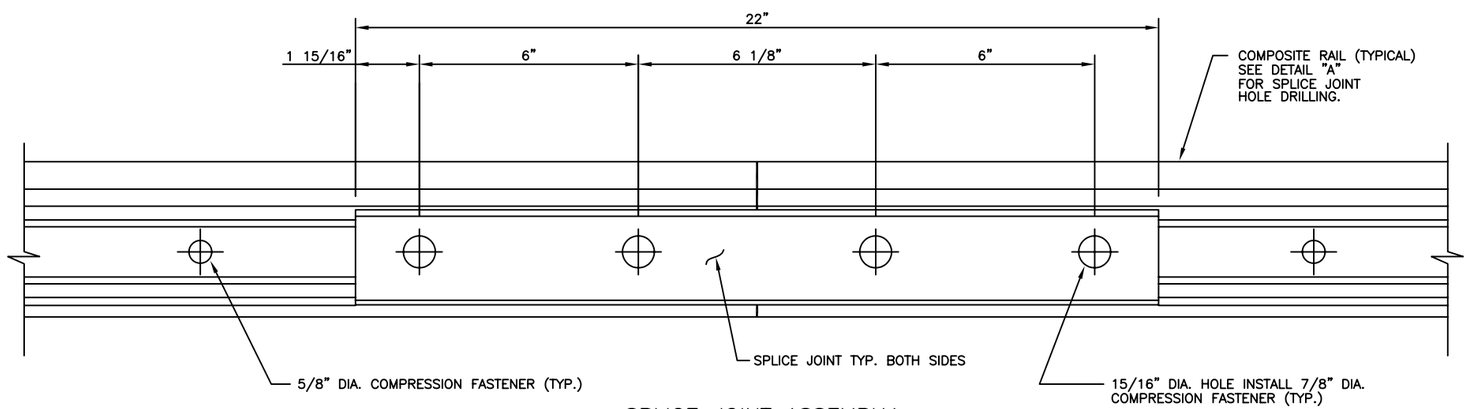

SPLICE JOINT ASSEMBLY
SCALE: 1/2"=0'-1"

NOTES:

1. THE SHADED PORTION OF COMPOSITE RAIL INDICATES THE CLEARANCE ENVELOPE. THE UNSHADED PORTION REPRESENTS THE MANDATORY OUTLINE OF THE BASE RAIL.
2. COMPOSITE CONTACT RAIL SHALL BE INSTALLED SO THAT COMPRESSION FASTENER COLLARS FACE AWAY FROM CENTERLINE OF TRACK.

DESIGNED	W. TINKHAM	6-98 DATE
DRAWN	A. DAVIS	08/06 DATE
CHECKED	R.ROCKEFELLER	11/06 DATE
APPROVED	L. PADGETT	11/06 DATE

REFERENCE DRAWINGS

NUMBER	DESCRIPTION

REVISIONS

DATE	BY	DESCRIPTION
12/2006	CENF	MINOR REVISIONS

WASHINGTON METROPOLITAN AREA TRANSIT AUTHORITY

OFFICE OF ENGINEERING SUPPORT SERVICES

SUBMITTED L.R.Padgett 10/2007 DATE

APPROVED 10/2007 DATE

CONTACT RAIL DESIGN DRAWING
COMPOSITE RAIL CLEARANCE ENVELOPE
AND SPLICE JOINT ASSEMBLY

SCALE: AS NOTED

DRAWING NO. DD-TW-CR-003

WMATA CONFIDENTIAL INFORMATION - DO NOT DISCLOSE WITHOUT EXPRESS WRITTEN APPROVAL OF THE GENERAL MANAGER OF THE AUTHORITY

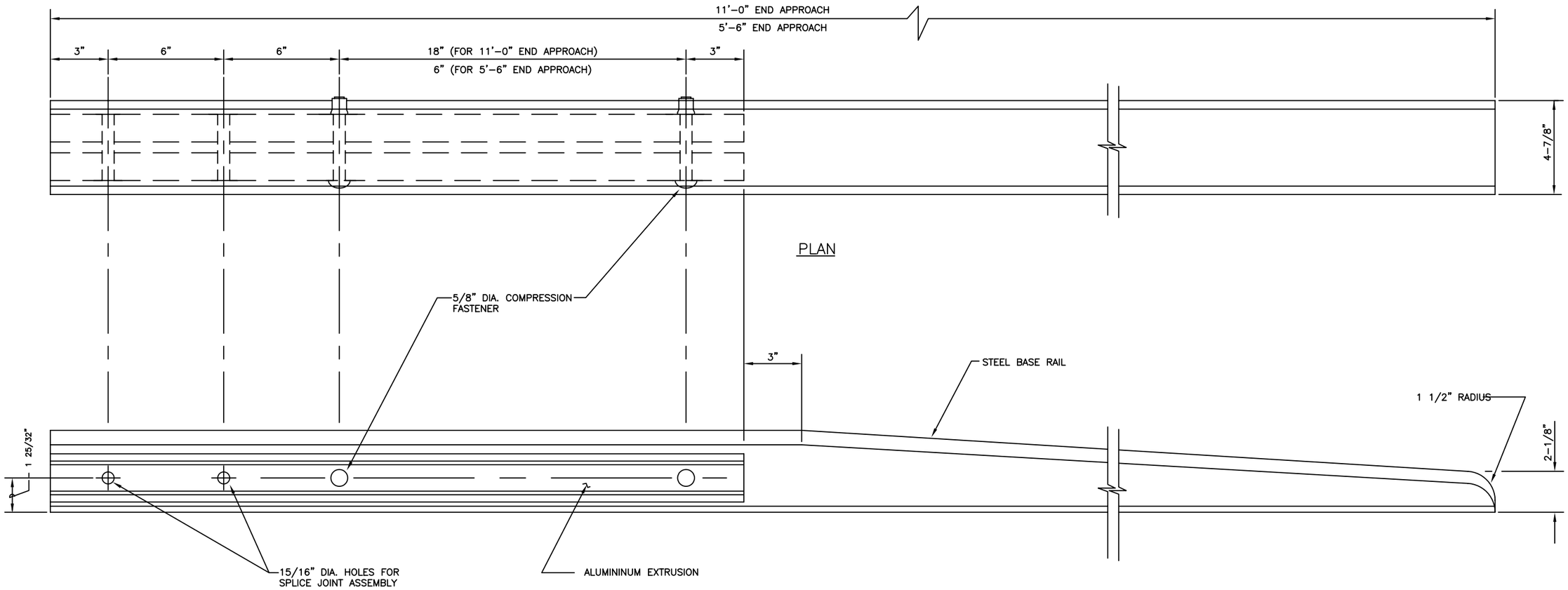

NOTE:
1. SEE DESIGN CRITERIA FOR USE OF 11'-0" AND 5'-6" END APPROACHES.

DESIGNED	W. TINKHAM	6-98 DATE
DRAWN	A. DAVIS	08/06 DATE
CHECKED	R.ROCKEFELLER	11/06 DATE
APPROVED	L. PADGETT	11/06 DATE

REFERENCE DRAWINGS

NUMBER	DESCRIPTION

REVISIONS

DATE	BY	DESCRIPTION
12/2006	CENF	MINOR REVISIONS, NOTES ADDED..

WASHINGTON METROPOLITAN AREA TRANSIT AUTHORITY

OFFICE OF ENGINEERING SUPPORT SERVICES

SUBMITTED L.R.Padgett 10/2007 DATE

APPROVED 10/2007 DATE

CONTACT RAIL DESIGN DRAWING
COMPOSITE RAIL END APPROACHES

SCALE 3/8"= 1"

DRAWING NO. DD-TW-CR-004

WMATA CONFIDENTIAL INFORMATION - DO NOT DISCLOSE WITHOUT EXPRESS WRITTEN APPROVAL OF THE GENERAL MANAGER OF THE AUTHORITY

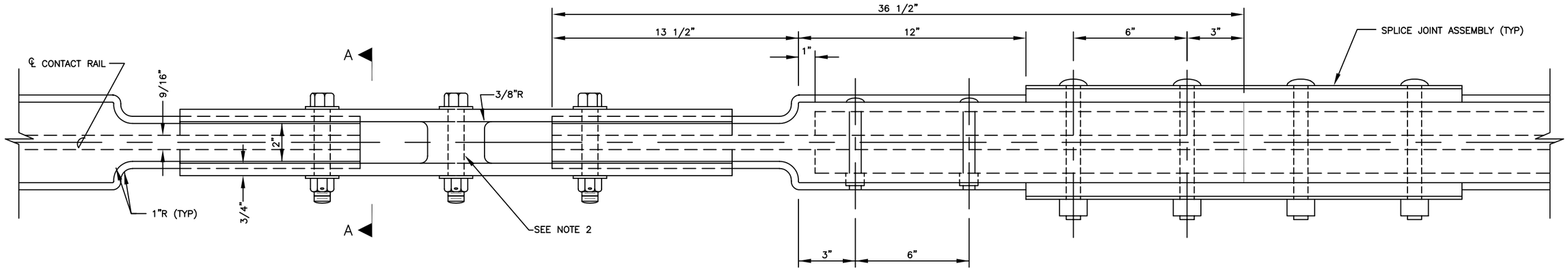

PLAN
SCALE: 3/8"=1"

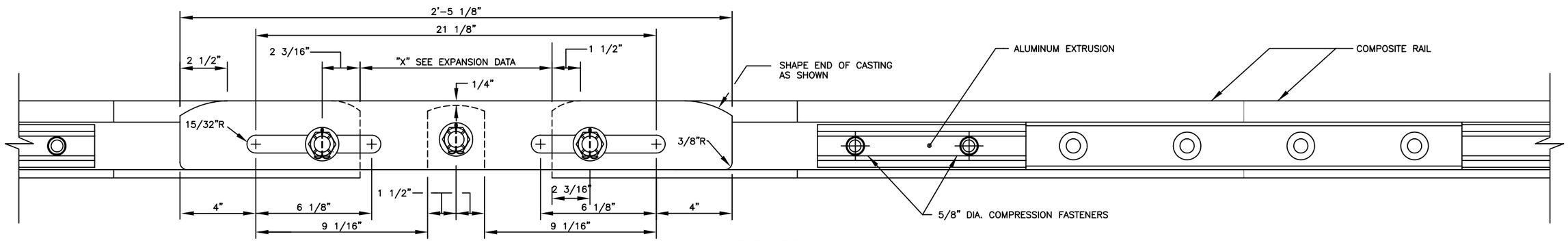

ELEVATION
SCALE: 3/8"=1"

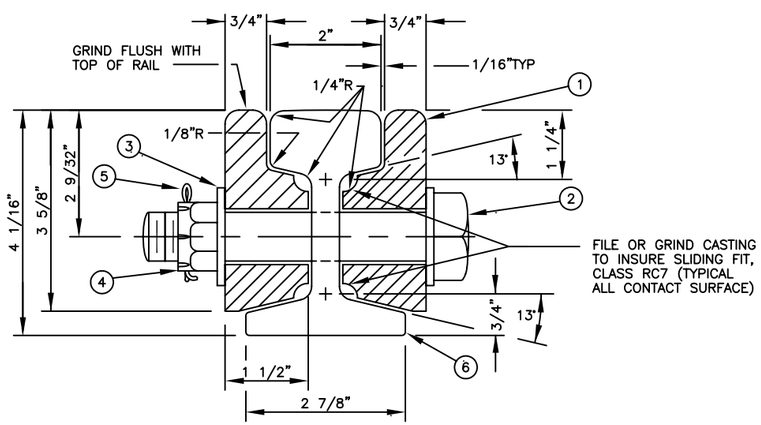

SECTION A–A
SCALE: 3/8"=1"

EXPANSION DATA (SEE NOTE 1)																
TEMP OF RAILS–F°	0	10	20	30	40	50	60	70	80	90	100	110	120	130	140	150
DIMENSION "X"	16 11/16	15 7/8	15 1/16	14 1/4	13 7/16	12 5/8	11 13/16	11	10 3/16	9 3/8	8 9/16	7 3/4	6 15/16	6 1/8	5 5/16	4 1/2

EXPANSION JOINT		
ITEM No.	QTY.	BILL OF MATERIAL
1	2	EXPANSION JOINT BAR (STEEL OR MALLEABLE IRON)
2	3	BOLT 7/8" x 5 1/4" LG, GALVANIZED STEEL
3	6	FLAT WASHER FOR 7/8" BOLT, GALVANIZED STEEL
4	3	CASTLE HEX. NUT FOR 7/8" BOLT GALVANIZED STEEL
5	3	COTTER PIN 1/8" x 1 3/4" LG. BRASS STEEL
6	2	COMPOSITE RAIL

NOTE:
1. TOLERANCES± 1° F, ± 1/8"
2. A KEYED JOINT SHALL BE PROVIDED IN THE EXPANSION JOINT BARS (ITEM No. 1)

DESIGNED	W. TINKHAM	6–98 DATE
DRAWN	A. DAVIS	11/06 DATE
CHECKED	R.ROCKEFELLER	11/06 DATE
APPROVED	L. PADGETT	08/06 DATE

REFERENCE DRAWINGS

NUMBER	DESCRIPTION

REVISIONS

DATE	BY	DESCRIPTION
12/2006	CENF	MINOR REVISIONS

WASHINGTON METROPOLITAN AREA TRANSIT AUTHORITY

OFFICE OF ENGINEERING SUPPORT SERVICES

SUBMITTED L.R.Padgett 10/2007 DATE

APPROVED 10/2007 DATE

CONTACT RAIL DESIGN DRAWING
COMPOSITE RAIL EXPANSION JOINT ASSEMBLY AND DETAILS

SCALE: AS NOTED

DRAWING NO. DD–TW–CR–005

WMATA CONFIDENTIAL INFORMATION - DO NOT DISCLOSE WITHOUT EXPRESS WRITTEN APPROVAL OF THE GENERAL MANAGER OF THE AUTHORITY

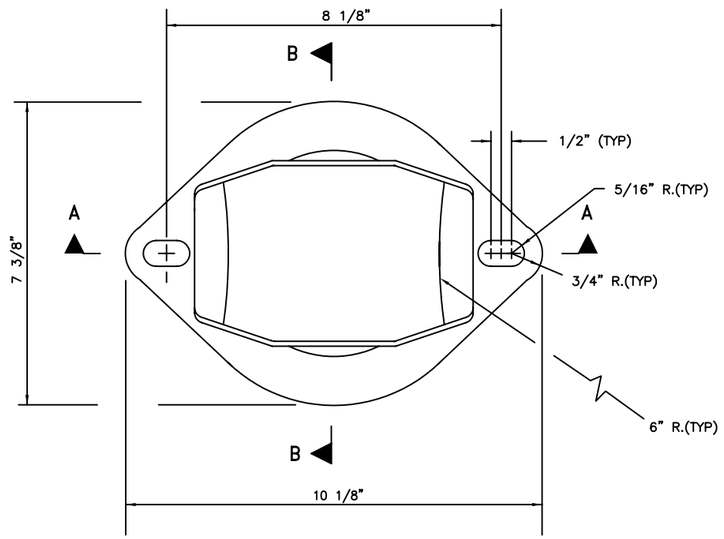

PLAN

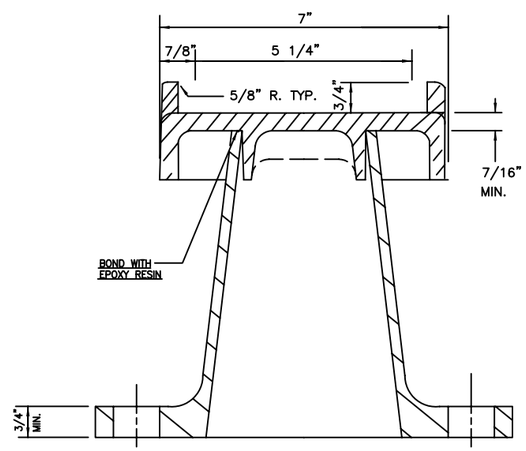

SECTION A–A

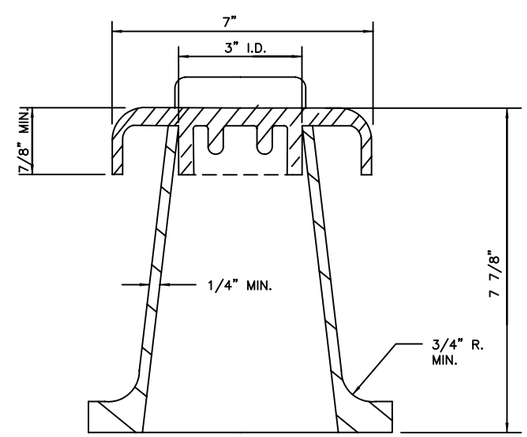

SECTION B–B

NOTE:

1. TYPICAL EXTERIOR DIMENSIONS OF INSULATOR ARE SHOWN.
2. TOLERANCE OF WITHIN +/– 1/32.

DESIGNED	W. TINKHAM	6–98 DATE
DRAWN	A. DAVIS	08/06 DATE
CHECKED	R.ROCKEFELLER	11/06 DATE
APPROVED	L. PADGETT	11/06 DATE

REFERENCE DRAWINGS

NUMBER	DESCRIPTION

REVISIONS

DATE	BY	DESCRIPTION
12/2006	CENF	MINOR REVISIONS
07/2007	CENF	THIS DWG REVISED PLASTIC INSULATOR DESIGN TO FIBERGLASS DESIGN.

WASHINGTON METROPOLITAN AREA TRANSIT AUTHORITY

OFFICE OF ENGINEERING SUPPORT SERVICES

SUBMITTED LRPadgett 10/2007 DATE

APPROVED 10/2007 DATE

CONTACT RAIL DESIGN DRAWING
CONTACT RAIL
FIBERGLASS INSULATOR

SCALE 3/4"= 1"

DRAWING NO. DD–TW–CR–006

WMATA CONFIDENTIAL INFORMATION - DO NOT DISCLOSE WITHOUT EXPRESS WRITTEN APPROVAL OF THE GENERAL MANAGER OF THE AUTHORITY

ITEM NO	QUAN.	BILL OF MATERIAL
1	1	INSULATOR
2	1	INSULATOR MOUNTING BASE
3	1	BASE PAD
4	1	CONTACT RAIL CLIP CUSHION
5	1	INSULATOR BASE RING
6	2	CONTACT RAIL CLIP
7	1	1/2 " – 13 UNC x 6 1/2 " LG. SQ. HD BOLT – 2A GALVANIZED STEEL
8	1	1/2 " – 13 UNC HEX. HD LOCKNUT – 2B GALVANIZED STEEL

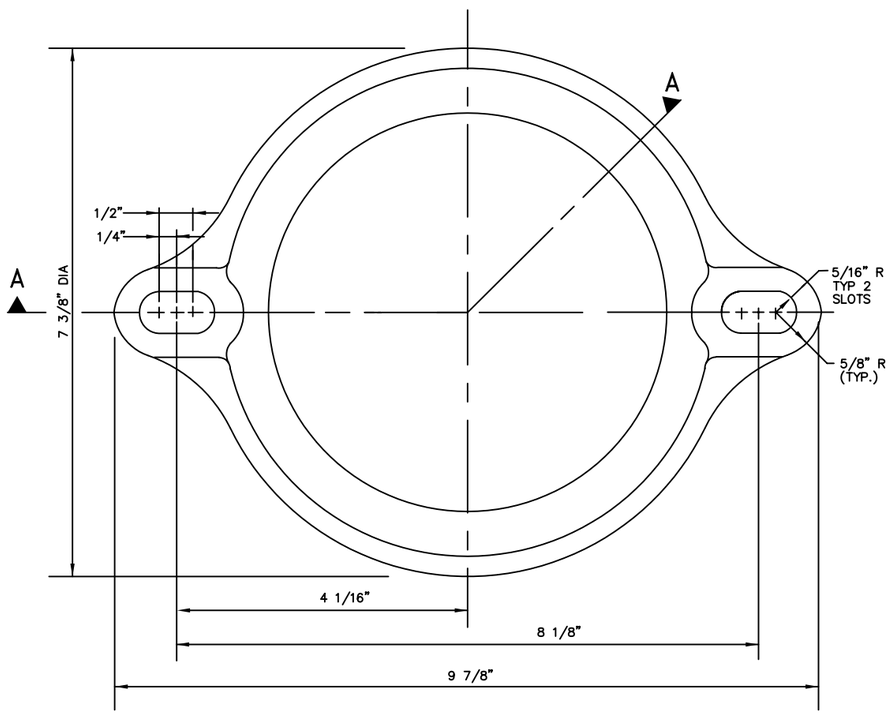

INSULATOR MOUNTING BASE

MATERIAL: MALLEABLE IRON GALVAVNIZED

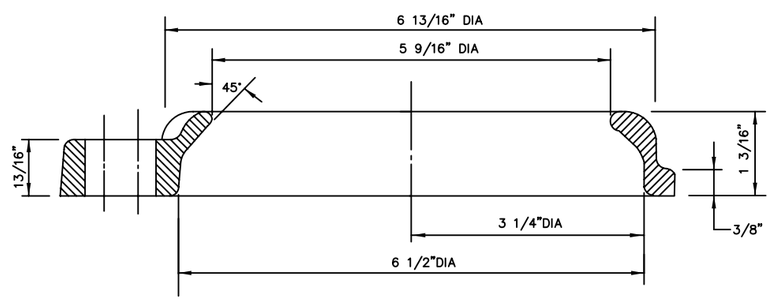

SECTION A–A

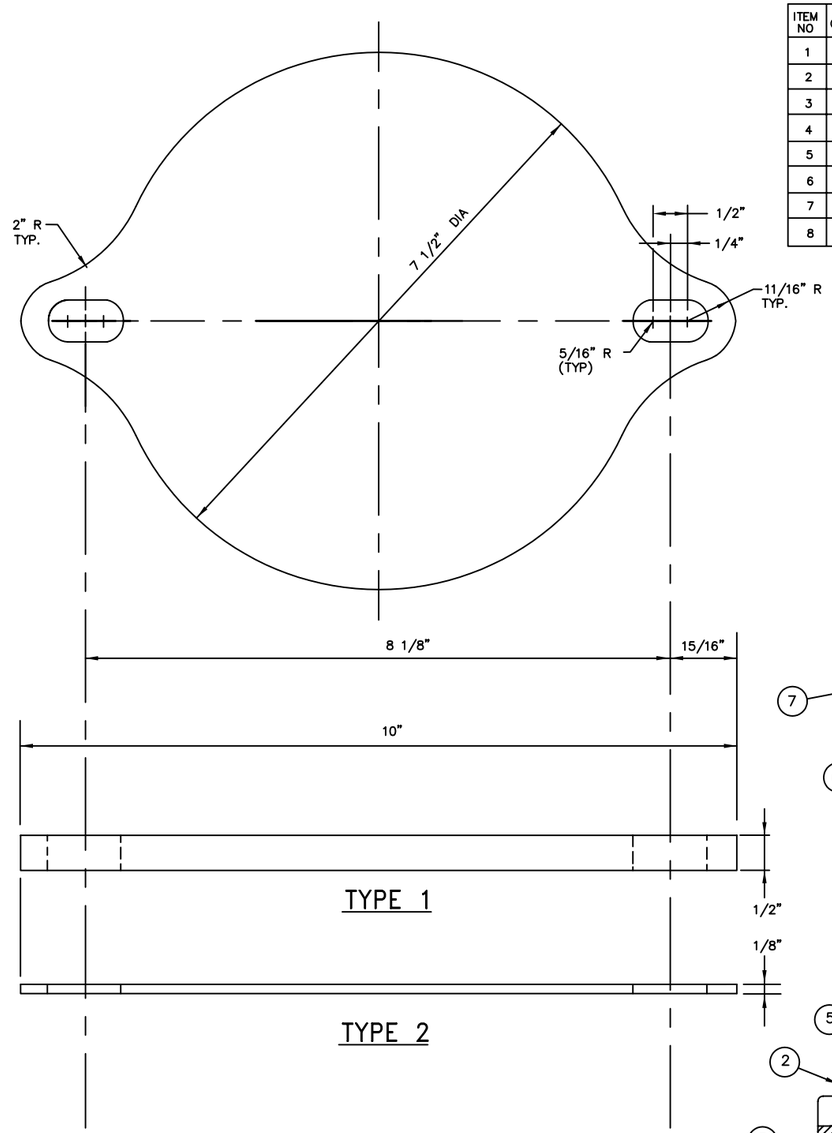

BASE PAD

MATERIAL: NEOPRENE

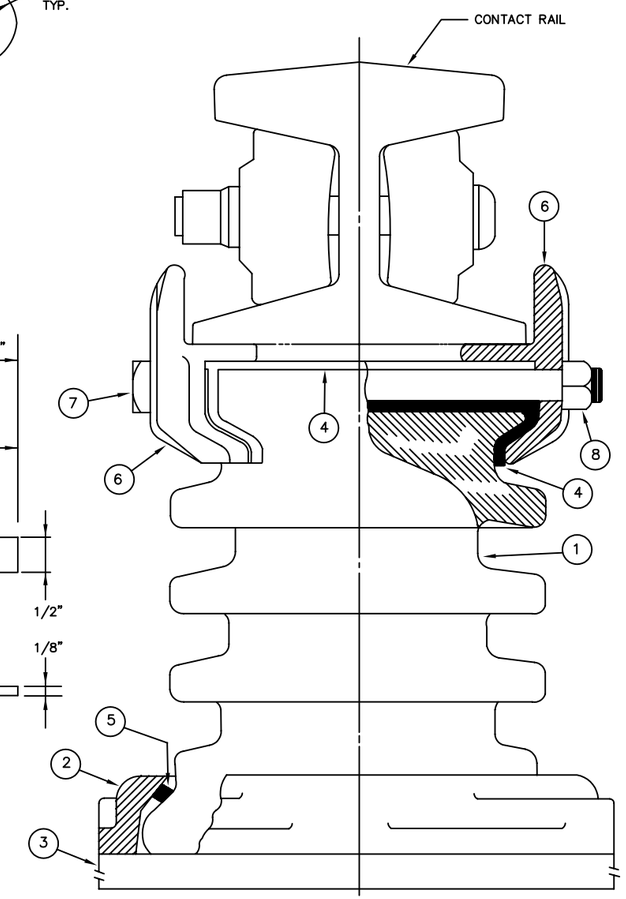

INSULATOR ASSEMBLY

DESIGNED	W. TINKHAM	6–98 DATE
DRAWN	A. DAVIS	08/06 DATE
CHECKED	R.ROCKEFELLER	11/06 DATE
APPROVED	L. PADGETT	11/06 DATE

REFERENCE DRAWINGS

NUMBER	DESCRIPTION

REVISIONS

DATE	BY	DESCRIPTION
12/2006	CENF	MINOR REVISION

WASHINGTON METROPOLITAN AREA TRANSIT AUTHORITY

OFFICE OF ENGINEERING SUPPORT SERVICES

SUBMITTED LRPadgett 10/2007 DATE

APPROVED 10/2007 DATE

CONTACT RAIL DESIGN DRAWING

PORCELAIN INSULATOR ASSEMBLY AND DETAILS

SHEET 1 OF 2

SCALE 1"= 1"

DRAWING NO. DD–TW–CR–007

WMATA CONFIDENTIAL INFORMATION - DO NOT DISCLOSE WITHOUT EXPRESS WRITTEN APPROVAL OF THE GENERAL MANAGER OF THE AUTHORITY

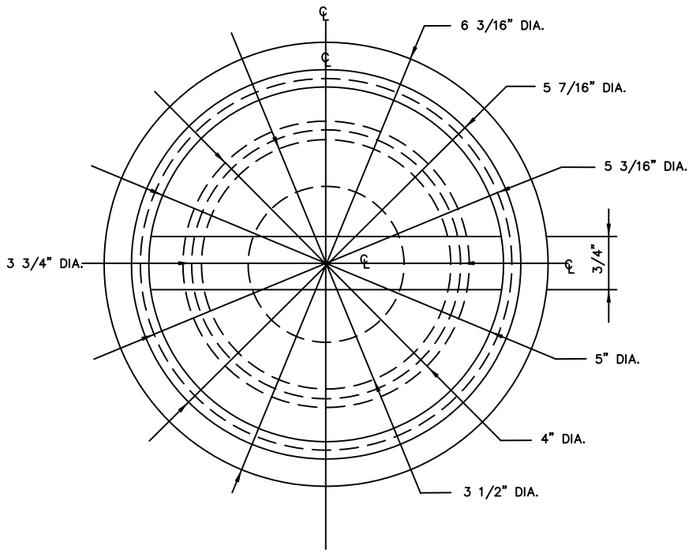

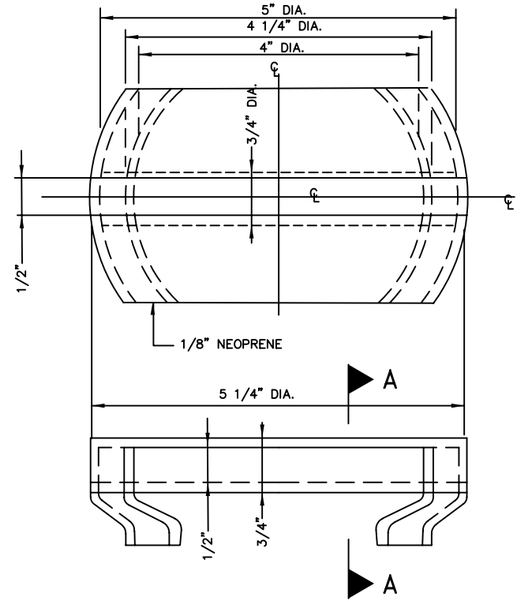

CONTACT RAIL CLIP CUSHION

MATERIAL: NEOPRENE

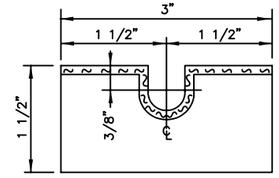

SECTION A–A

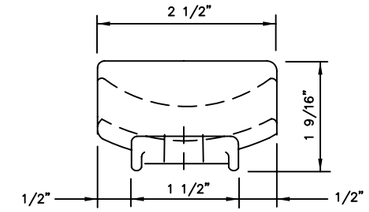

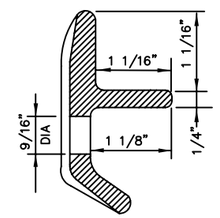

SECTION B–B

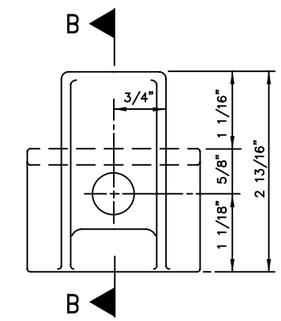

CONTACT RAIL CLIP

MATERIAL: MALLEABLE IRON GALVANIZED

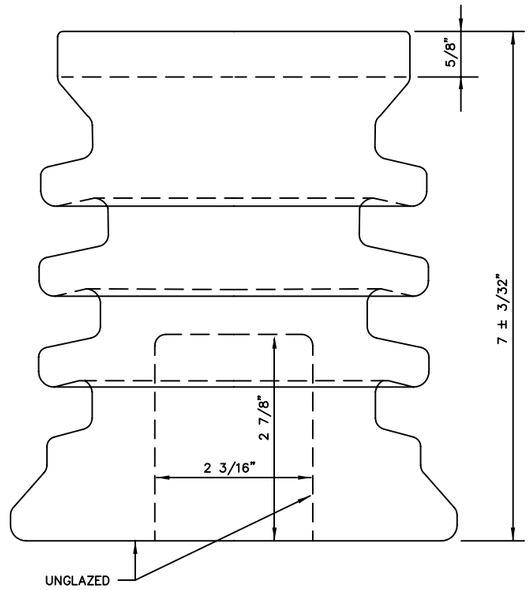

INSULATOR

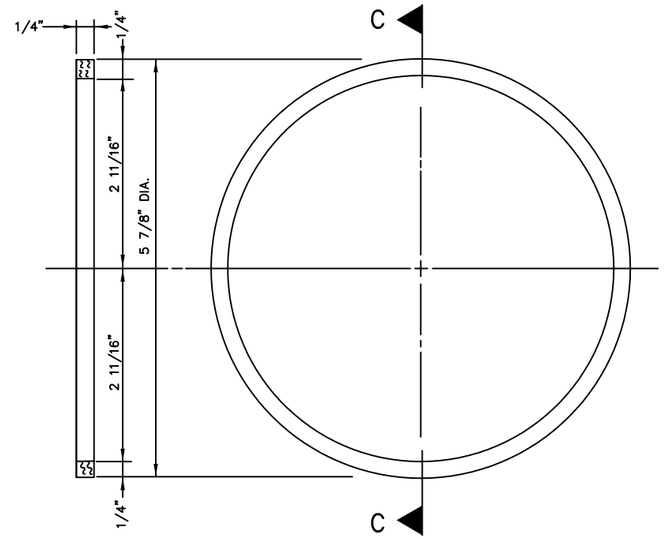

SECTION C–C

INSULATOR BASE RING

MATERIAL: NEOPRENE

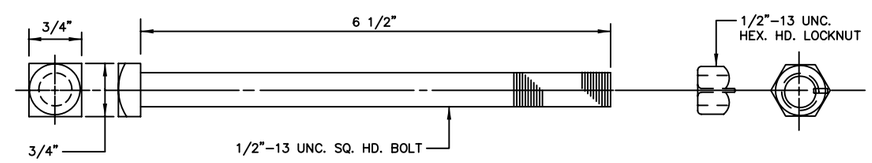

CONTACT RAIL CLIP BOLT & LOCKNUT

MATERIAL: STEEL GALVANIZED

DESIGNED	W. TINKHAM	6–98 DATE
DRAWN	A. DAVIS	08/06 DATE
CHECKED	R.ROCKEFELLER	11/06 DATE
APPROVED	L. PADGETT	11/06 DATE

REFERENCE DRAWINGS

NUMBER	DESCRIPTION

REVISIONS

DATE	BY	DESCRIPTION
12/2006	CENF	MINOR REVISION

WASHINGTON METROPOLITAN AREA TRANSIT AUTHORITY

OFFICE OF ENGINEERING SUPPORT SERVICES

SUBMITTED LRPadgett 10/2007 DATE

APPROVED 10/2007 DATE

CONTACT RAIL DESIGN DRAWING
PORCELAIN INSULATOR ASSEMBLY AND DETAILS
SHEET 2 OF 2

SCALE 1"= 1"

DRAWING NO. DD–TW–CR–008

WMATA CONFIDENTIAL INFORMATION - DO NOT DISCLOSE WITHOUT EXPRESS WRITTEN APPROVAL OF THE GENERAL MANAGER OF THE AUTHORITY

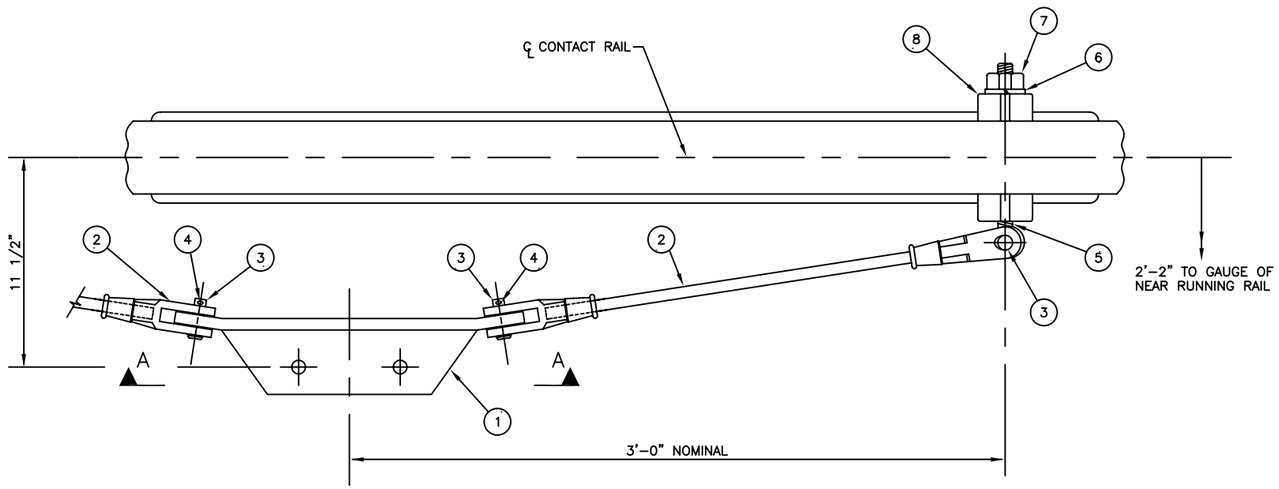

PLAN OF ASSEMBLY

SCALE: 1/4"= 1"

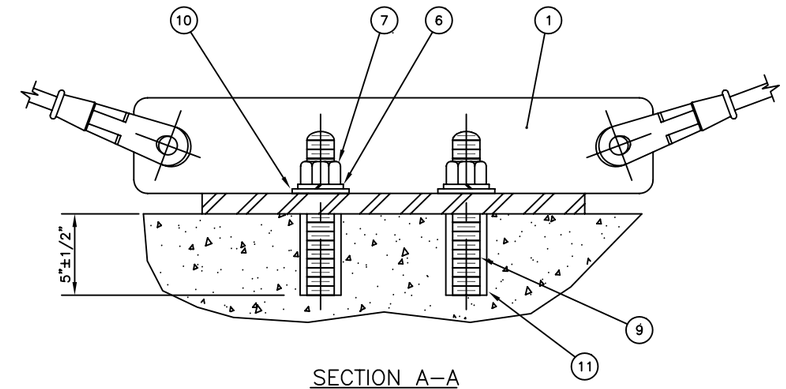

SECTION A–A
FOR DIRECT FIXATION

N.T.S.

ASSEMBLY DESCRIPTIONS (SEE SECTION A–A)

ASSEMBLY No.1 CONTACT RAIL ANCHOR FOR TIMBER TIE

ASSEMBLY No.2 CONTACT RAIL ANCHOR FOR DIRECT FIXATION

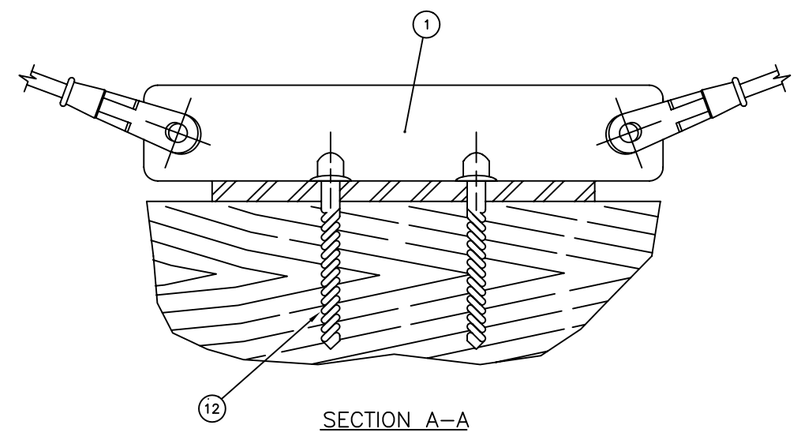

SECTION A–A
FOR TIMBER TIE

N.T.S.

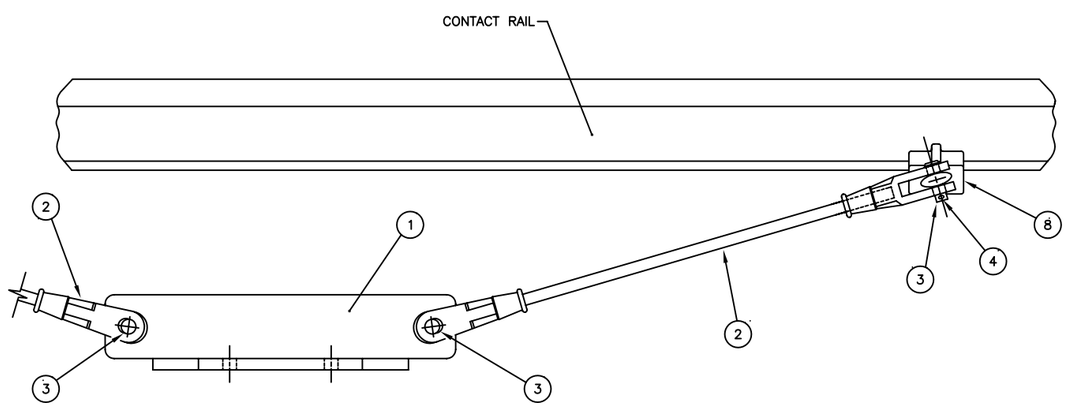

ELEVATION OF ASSEMBLY

SCALE: 1/4"= 1"

QUANTITY ASSY–1	QUANTITY ASSY–2	ITEM No.	BILL OF MATERIAL
1	1	1	BRACKET GALVANIZED STEEL
2	2	2	CLEVIS ASSEMBLY
4	4	3	CLEVIS PIN, .750" DIA.x2–1/8" LONG GALVANIZED STEEL
4	4	4	COTTER PIN, .125" DIA.x1.0" LONG BRASS
2	2	5	SHOULDER EYE BOLT, 3/4" DIA. GALVANIZED STEEL
2	4	6	LOCKWASHER, 3/4" DIA. GALVANIZED STEEL
2	4	7	HEX. NUT, 3/4" DIA. GALVANIZED STEEL
4	4	8	CLAMP, MALLEABLE IRON, GALVANIZED
–	2	9	THREADED STUD 3/4' DIA.x7–3/4" LONG GALVANIZED STEEL
–	2	10	FLAT WASHER 3/4" DIA.x3/16" THICK GALVANIZED STEEL
–	1	11	INSERT ANCHORING MATERIAL
2	–	12	WASHERHEAD DRIVE SPIKE 11/16" DIA.x6" LONG GALVANIZED STEEL

DESIGNED	W. TINKHAM	6–98 DATE
DRAWN	A. DAVIS	08/06 DATE
CHECKED	R.ROCKEFELLER	11/06 DATE
APPROVED	L. PADGETT	11/06 DATE

REFERENCE DRAWINGS

NUMBER	DESCRIPTION

REVISIONS

DATE	BY	DESCRIPTION
12/2006	CENF	MINOR REVISION

WASHINGTON METROPOLITAN AREA TRANSIT AUTHORITY

OFFICE OF ENGINEERING SUPPORT SERVICES

SUBMITTED LRPadgett 10/2007 DATE

APPROVED 10/2007 DATE

CONTACT RAIL DESIGN DRAWING
ANCHOR ASSEMBLY DETAILS AND SECTIONS
SHEET 1 OF 2

SCALE AS NOTED

DRAWING NO. DD–TW–CR–009

WMATA CONFIDENTIAL INFORMATION - DO NOT DISCLOSE WITHOUT EXPRESS WRITTEN APPROVAL OF THE GENERAL MANAGER OF THE AUTHORITY

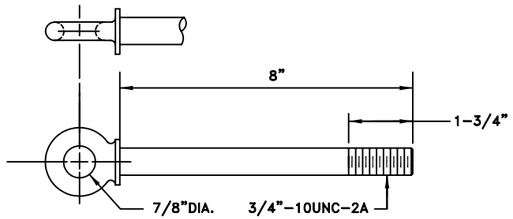

SHOULDER EYE BOLT

MATERIAL: FORGED STEEL GALVANIZED

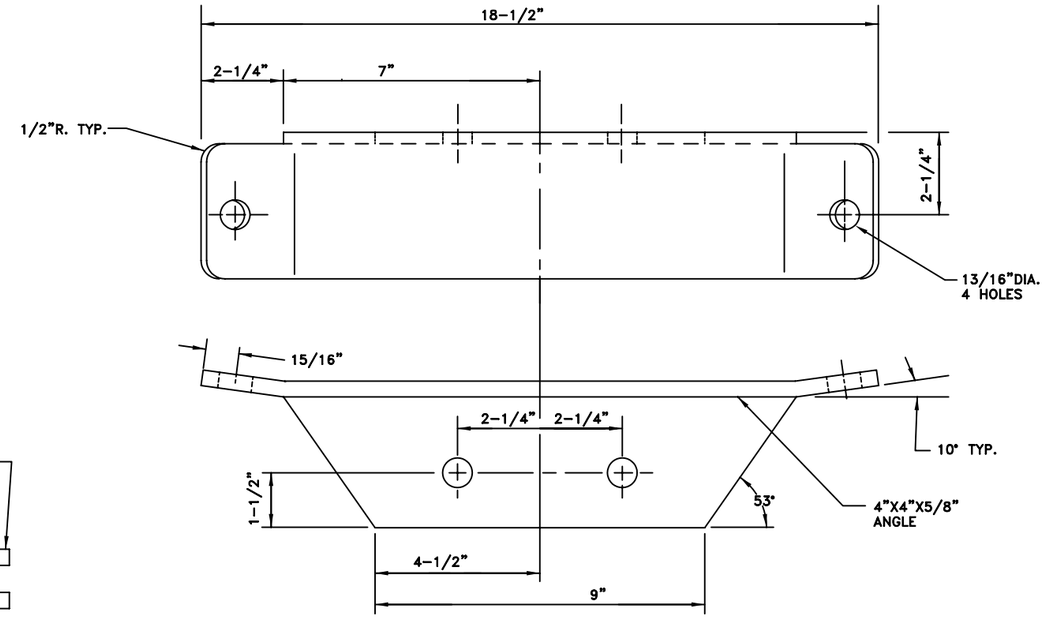

BRACKET

MATERIAL: STEEL GALVANIZED

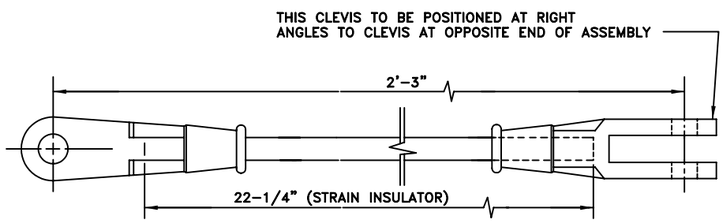

CLEVIS ASSEMBLY

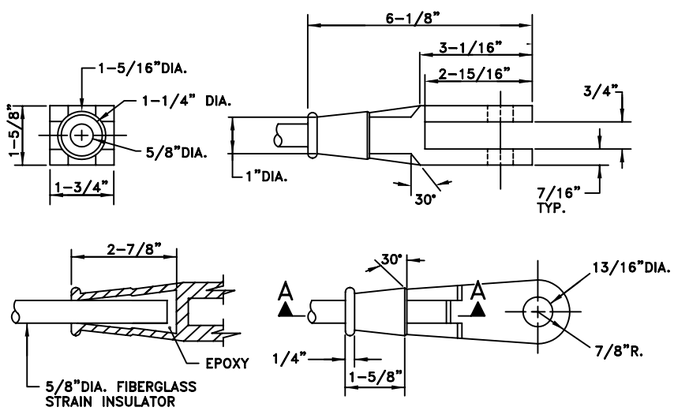

SECTION A-A

CLEVIS

MATERIAL: MALLEABLE IRON GALVANIZED

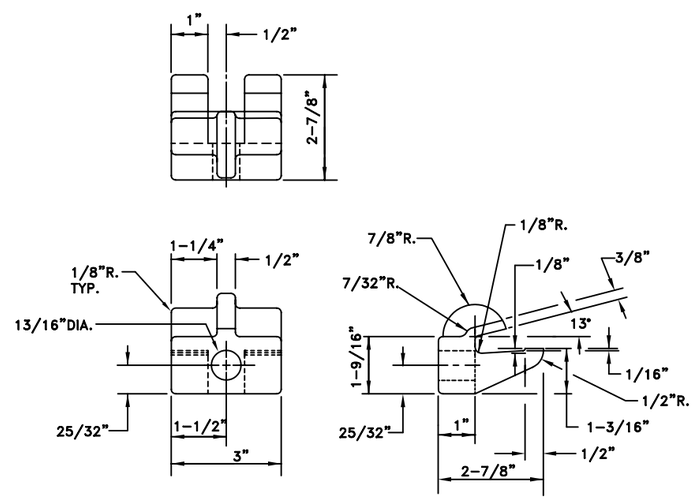

CLAMP

MATERIAL: MALLEABLE IRON, GALVANIZED

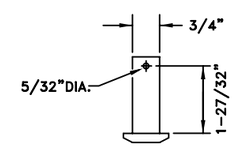

CLEVIS PIN

MATERIAL: STEEL,GALVANIZED

DESIGNED	W. TINKHAM	6-98 DATE
DRAWN	A. DAVIS	08/06 DATE
CHECKED	R.ROCKEFELLER	11/06 DATE
APPROVED	L. PADGETT	11/06 DATE

REFERENCE DRAWINGS

NUMBER	DESCRIPTION

REVISIONS

DATE	BY	DESCRIPTION
12/2006	CENF	MINOR REVISION

WASHINGTON METROPOLITAN AREA TRANSIT AUTHORITY

OFFICE OF ENGINEERING SUPPORT SERVICES

SUBMITTED LRPadgett 10/2007 DATE

APPROVED 10/2007 DATE

CONTACT RAIL DESIGN DRAWING

ANCHOR ASSEMBLY DETAILS AND SECTIONS

SHEET 2 OF 2

SCALE 1/2"= 1"

DRAWING NO. DD-TW-CR-010

WMATA CONFIDENTIAL INFORMATION - DO NOT DISCLOSE WITHOUT EXPRESS WRITTEN APPROVAL OF THE GENERAL MANAGER OF THE AUTHORITY

NOTES:

1. CONTRACTOR SHALL ADJUST LOCATION OF CHANNEL SO THAT CABLE DOES NOT TOUCH THE CONCRETE INVERT.
2. PROVIDE ADEQUATE SLACK IN CABLES TO ALLOW FOR 12" OF EXPANSION/CONTRACTION OF THE CONTACT RAIL.
3. SEE DRAWING DD-TW-CR-12 FOR CABLE MOUNTING REQUIREMENT IN BALLASTED TRACK AREA.

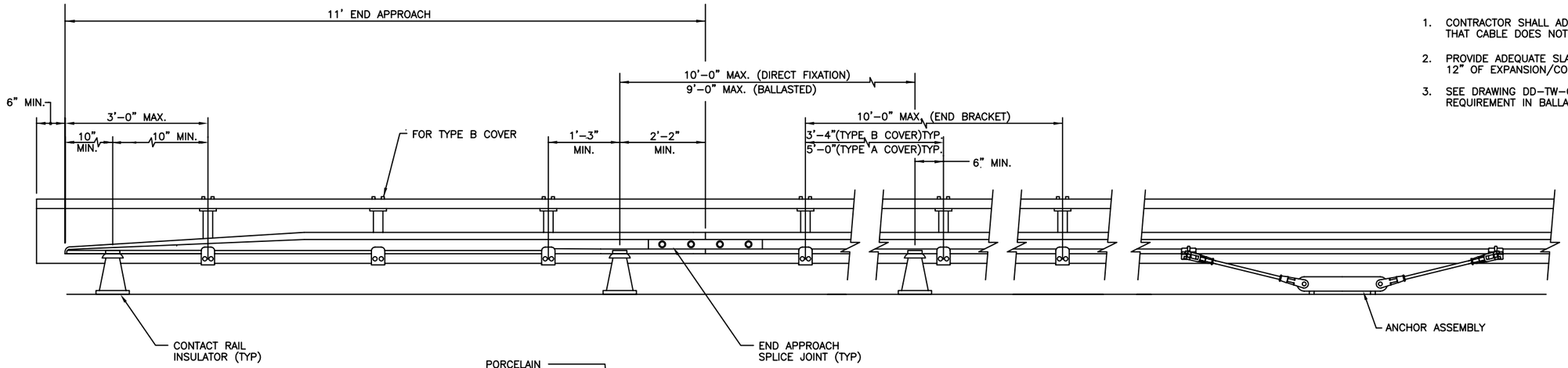

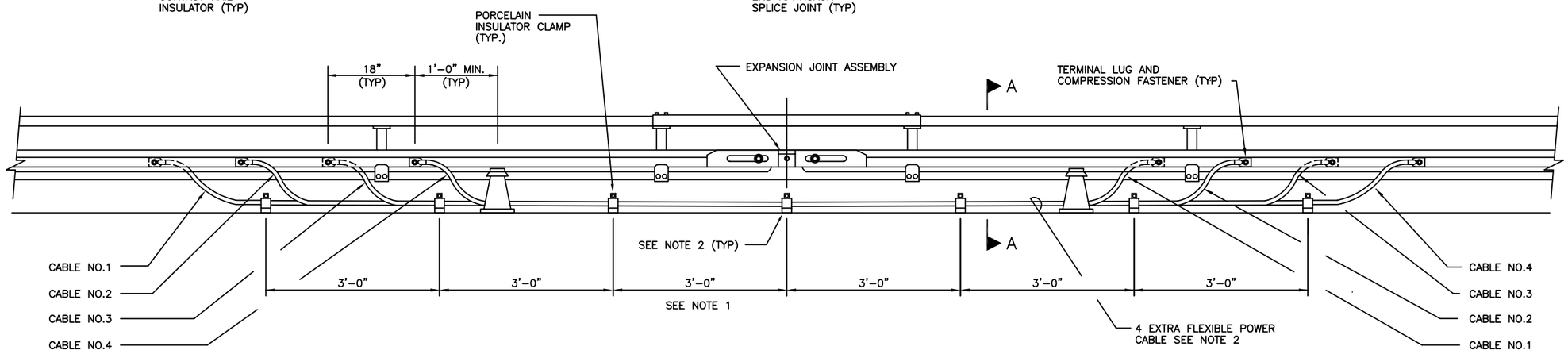

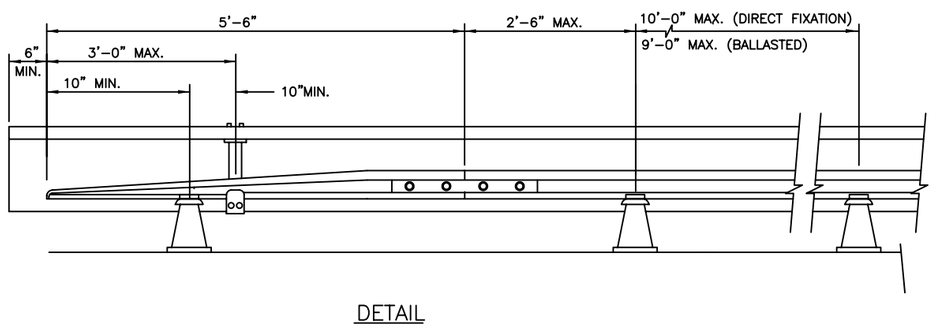

DETAIL
5'-6" END APPROACH
N.T.S.

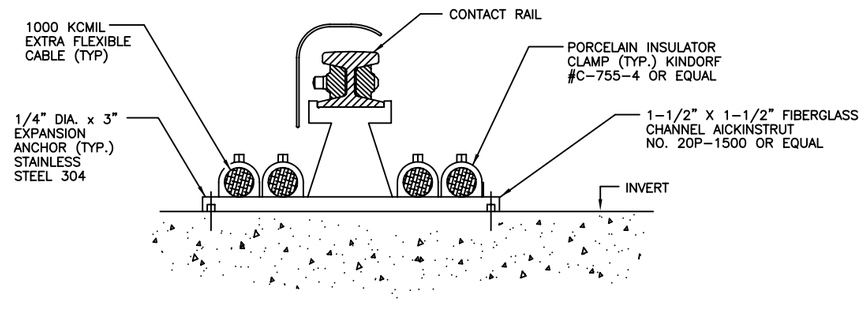

SECTION A-A
N.T.S.

DESIGNED	W. TINKHAM	6-98 DATE
DRAWN	A. DAVIS	08/06 DATE
CHECKED	R.ROCKEFELLER	11/06 DATE
APPROVED	L. PADGETT	11/06 DATE

REFERENCE DRAWINGS

NUMBER	DESCRIPTION

REVISIONS

DATE	BY	DESCRIPTION
12/2006	CENF	MINOR REVISION

WASHINGTON METROPOLITAN AREA TRANSIT AUTHORITY

OFFICE OF ENGINEERING SUPPORT SERVICES

SUBMITTED L.R.Padgett 10/2007 DATE

APPROVED 10/2007 DATE

CONTACT RAIL DESIGN DRAWING
SPACING-EXPANSION JOINTS, ANCHORS AND INSULATORS

SCALE NONE

DRAWING NO. DD-TW-CR-011

WMATA CONFIDENTIAL INFORMATION - DO NOT DISCLOSE WITHOUT EXPRESS WRITTEN APPROVAL OF THE GENERAL MANAGER OF THE AUTHORITY

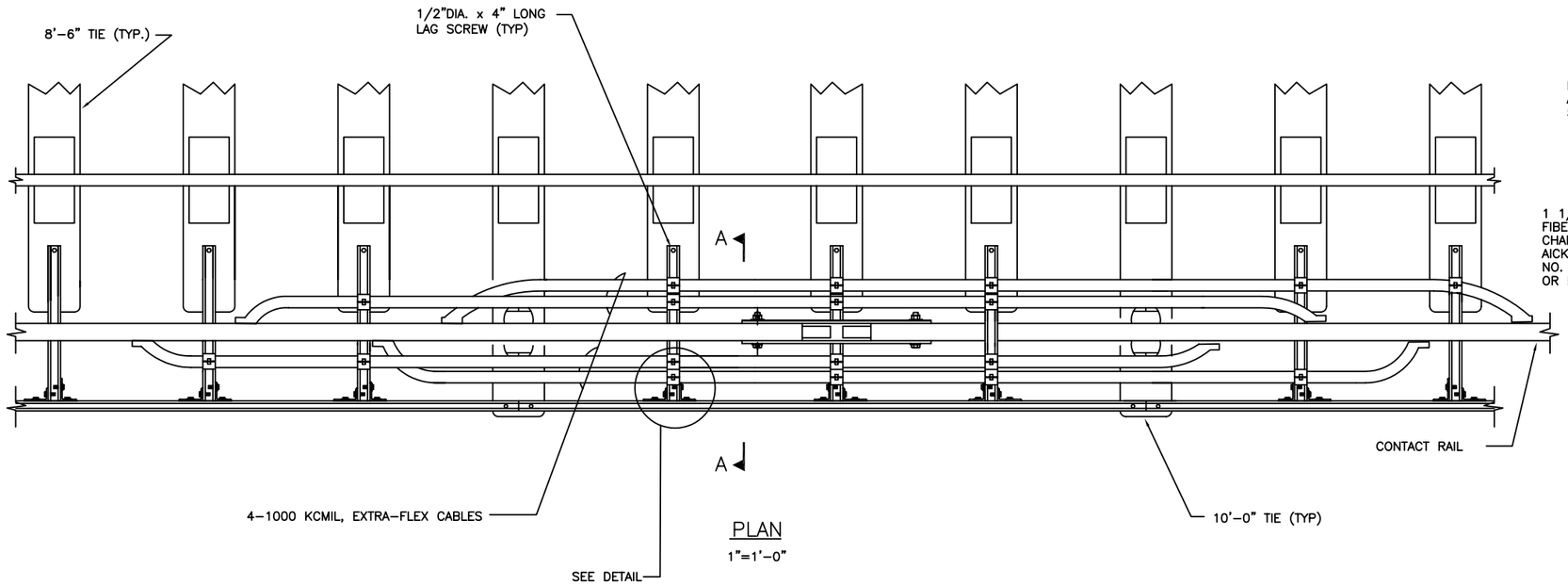

PLAN
1"=1'-0"

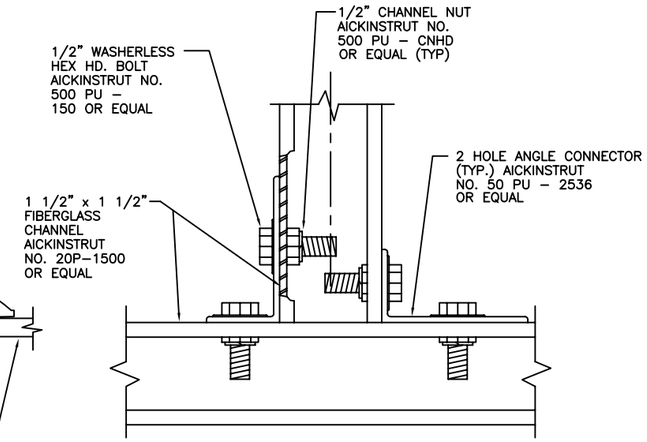

DETAIL 1
N.T.S.

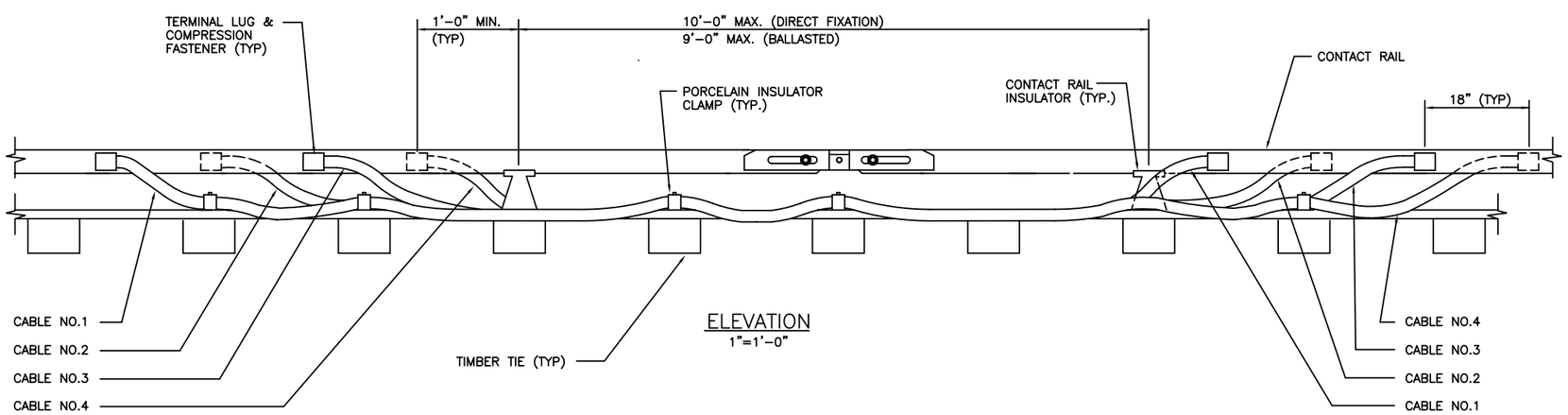

ELEVATION
1"=1'-0"

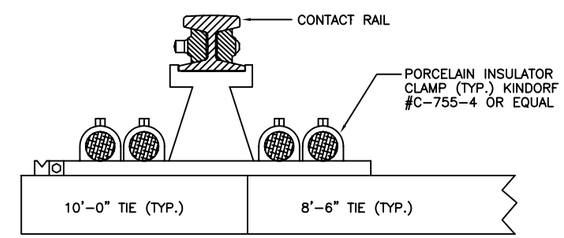

SECTION A-A
N.T.S.

DESIGNED	W. TINKHAM	6-98 DATE
DRAWN	A. DAVIS	08/06 DATE
CHECKED	R.ROCKEFELLER	11/06 DATE
APPROVED	L. PADGETT	11/06 DATE

REFERENCE DRAWINGS

NUMBER	DESCRIPTION

REVISIONS

DATE	BY	DESCRIPTION
9/2000	ENGA	Revised and issued by the Authority
12/2006	CENF	MINOR REVISION

WASHINGTON METROPOLITAN AREA TRANSIT AUTHORITY

OFFICE OF ENGINEERING SUPPORT SERVICES

SUBMITTED LRPadgett 10/2007 DATE

APPROVED 10/2007 DATE

CONTACT RAIL DESIGN DRAWING
EXPANSION JOINT JUMPER CABLE SUPPORT DETAILS IN BALLASTED TRACK

SCALE: AS NOTED

DRAWING NO. DD-TW-CR-012

WMATA CONFIDENTIAL INFORMATION - DO NOT DISCLOSE WITHOUT EXPRESS WRITTEN APPROVAL OF THE GENERAL MANAGER OF THE AUTHORITY

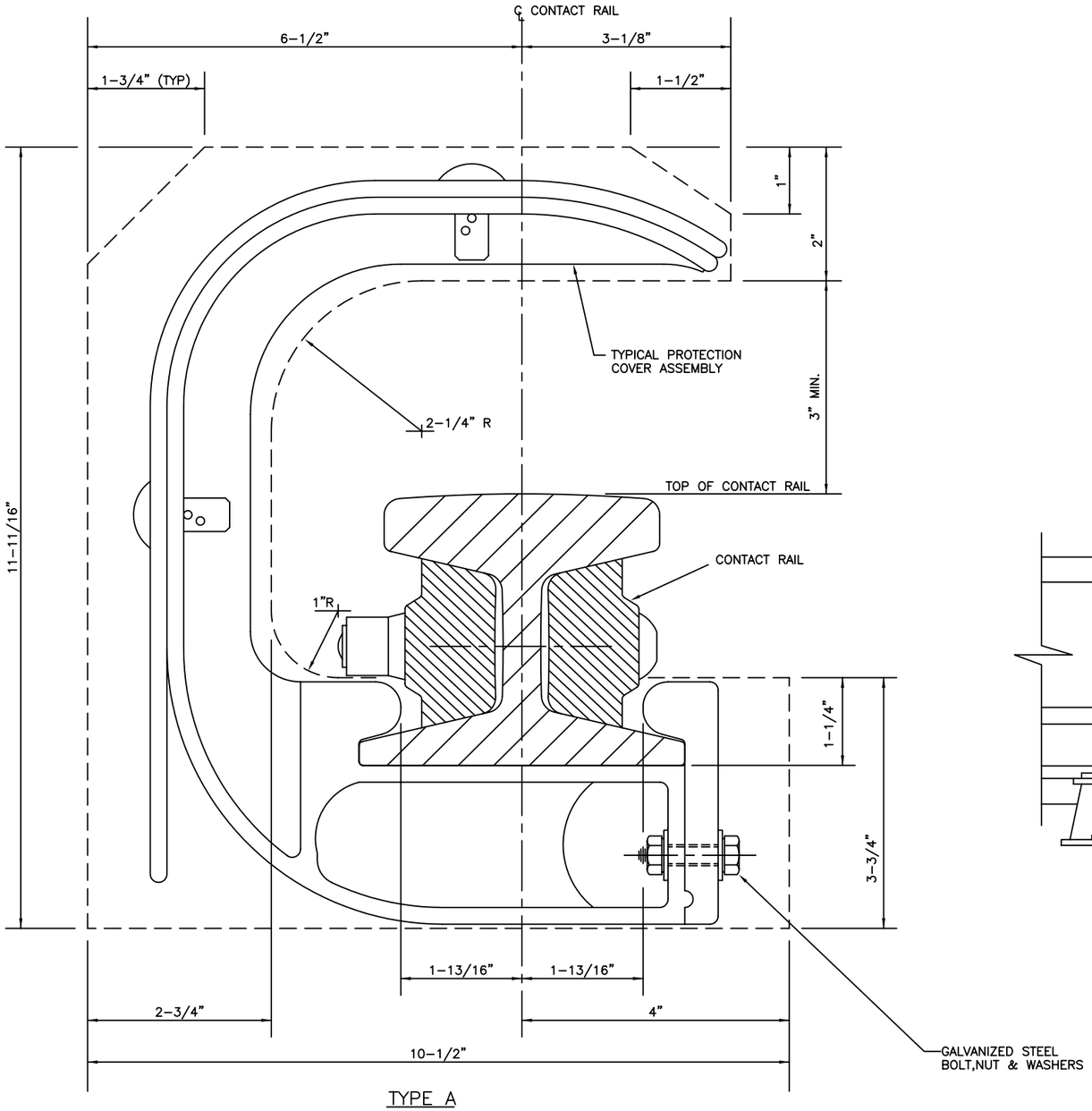

TYPE A
PROTECTION COVER ASSEMBLY
CLEARANCE ENVELOPE
1"=0'–1"

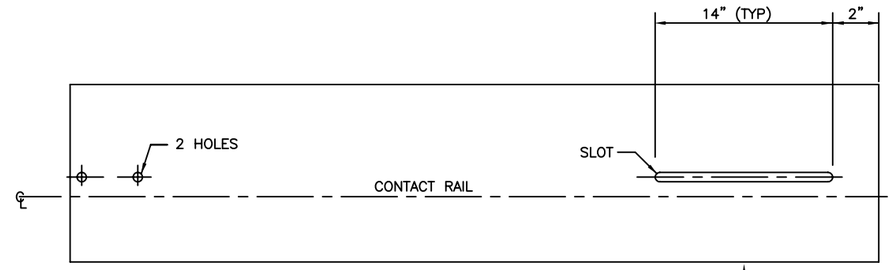

TOP VIEW
N.T.S

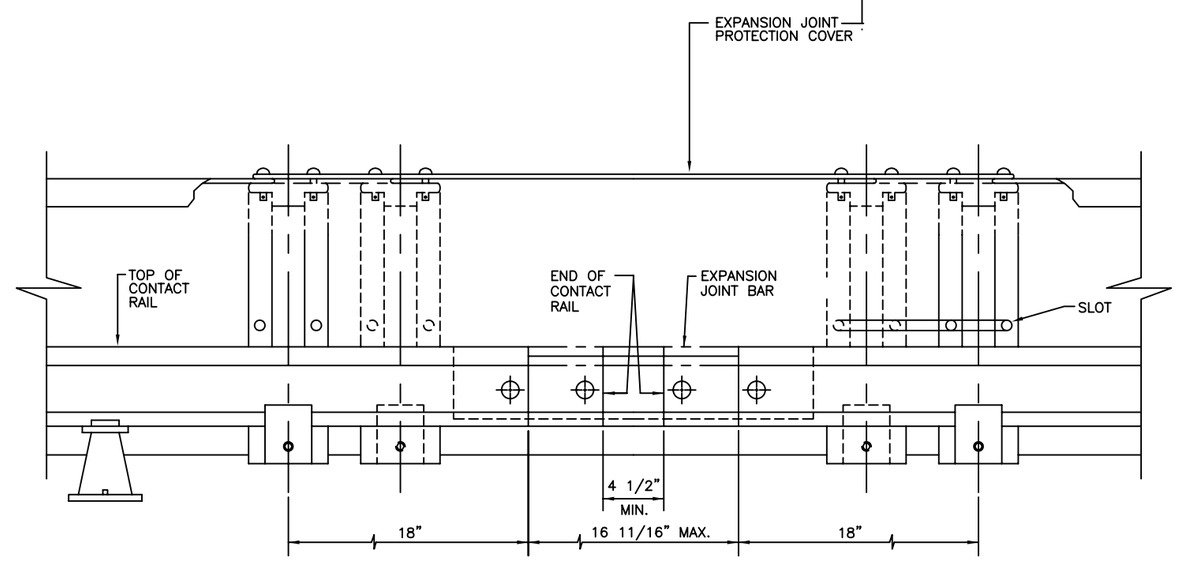

TYPICAL BRACKET & PROTECTION COVER
AT EXPANSION JOINT
N.T.S

NOTE:

1. TYPE A PROTECTION COVER ASSEMBLY IS USED IN UNDERGROUND LOCATIONS WHERE CONTACT RAIL HEATER TAPE IS NOT REQUIRED.

DESIGNED	W. TINKHAM	6–98 DATE
DRAWN	A. DAVIS	08/06 DATE
CHECKED	R.ROCKEFELLER	11/06 DATE
APPROVED	L. PADGETT	11/06 DATE

REFERENCE DRAWINGS

NUMBER	DESCRIPTION

REVISIONS

DATE	BY	DESCRIPTION
12/2006	CENF	MINOR REVISION

WASHINGTON METROPOLITAN AREA TRANSIT AUTHORITY

OFFICE OF ENGINEERING SUPPORT SERVICES

SUBMITTED L.R. Padgett 10/2007 DATE

APPROVED 10/2007 DATE

CONTACT RAIL DESIGN DRAWING
COMPOSITE RAIL
WITH TYPE A PROTECTION COVER

SCALE AS NOTED

DRAWING NO. DD–TW–CR–013

WMATA CONFIDENTIAL INFORMATION - DO NOT DISCLOSE WITHOUT EXPRESS WRITTEN APPROVAL OF THE GENERAL MANAGER OF THE AUTHORITY

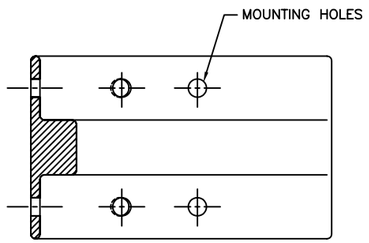

SECTION A–A

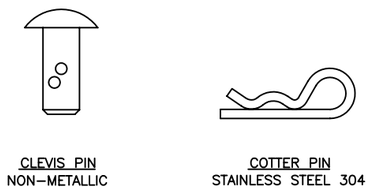

FASTENER

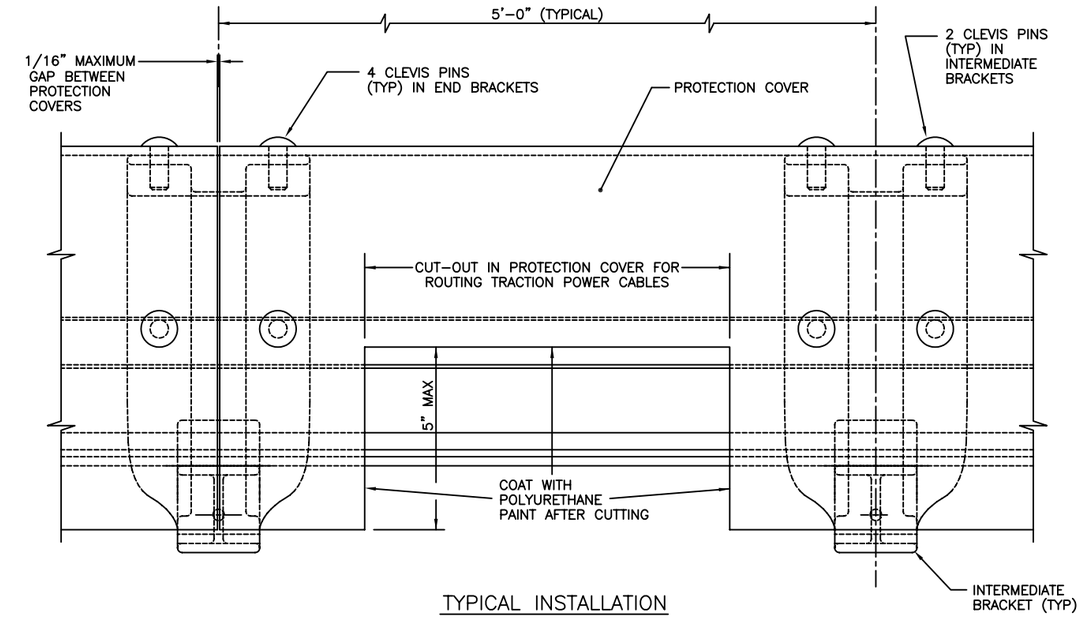

TYPICAL INSTALLATION

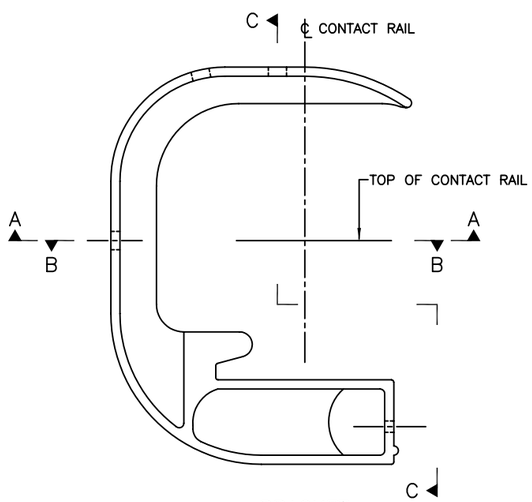

BRACKET
FIBERGLASS

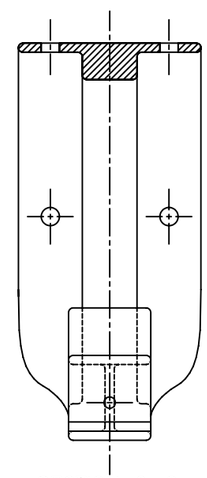

SECTION C–C

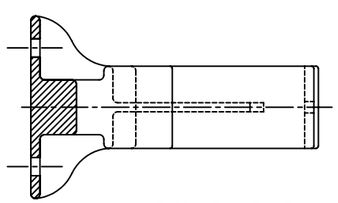

SECTION B–B

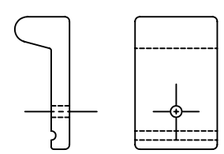

CLAMP
FIBERGLASS

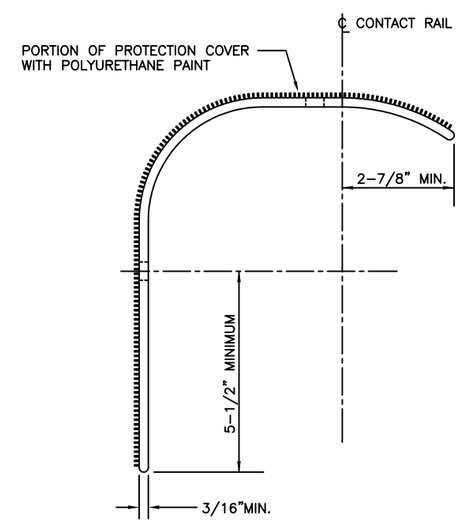

PROTECTION COVER
FIBERGLASS

DESIGNED	W.TINKHAM	6–98 DATE
DRAWN	A. DAVIS	08/06 DATE
CHECKED	R.ROCKEFELLER	11/06 DATE
APPROVED	L. PADGETT	11/06 DATE

REFERENCE DRAWINGS

NUMBER	DESCRIPTION

REVISIONS

DATE	BY	DESCRIPTION
12/2006	CENF	MINOR REVISION

WASHINGTON METROPOLITAN AREA TRANSIT AUTHORITY

OFFICE OF ENGINEERING SUPPORT SERVICES

SUBMITTED LRPadgett 10/2007 DATE

APPROVED 10/2007 DATE

CONTACT RAIL DESIGN DRAWING
TYPE A PROTECTION COVER ASSEMBLY
DETAILS AND SECTIONS

SCALE 1/2"= 1"

DRAWING NO. DD–TW–CR–014

WMATA CONFIDENTIAL INFORMATION - DO NOT DISCLOSE WITHOUT EXPRESS WRITTEN APPROVAL OF THE GENERAL MANAGER OF THE AUTHORITY

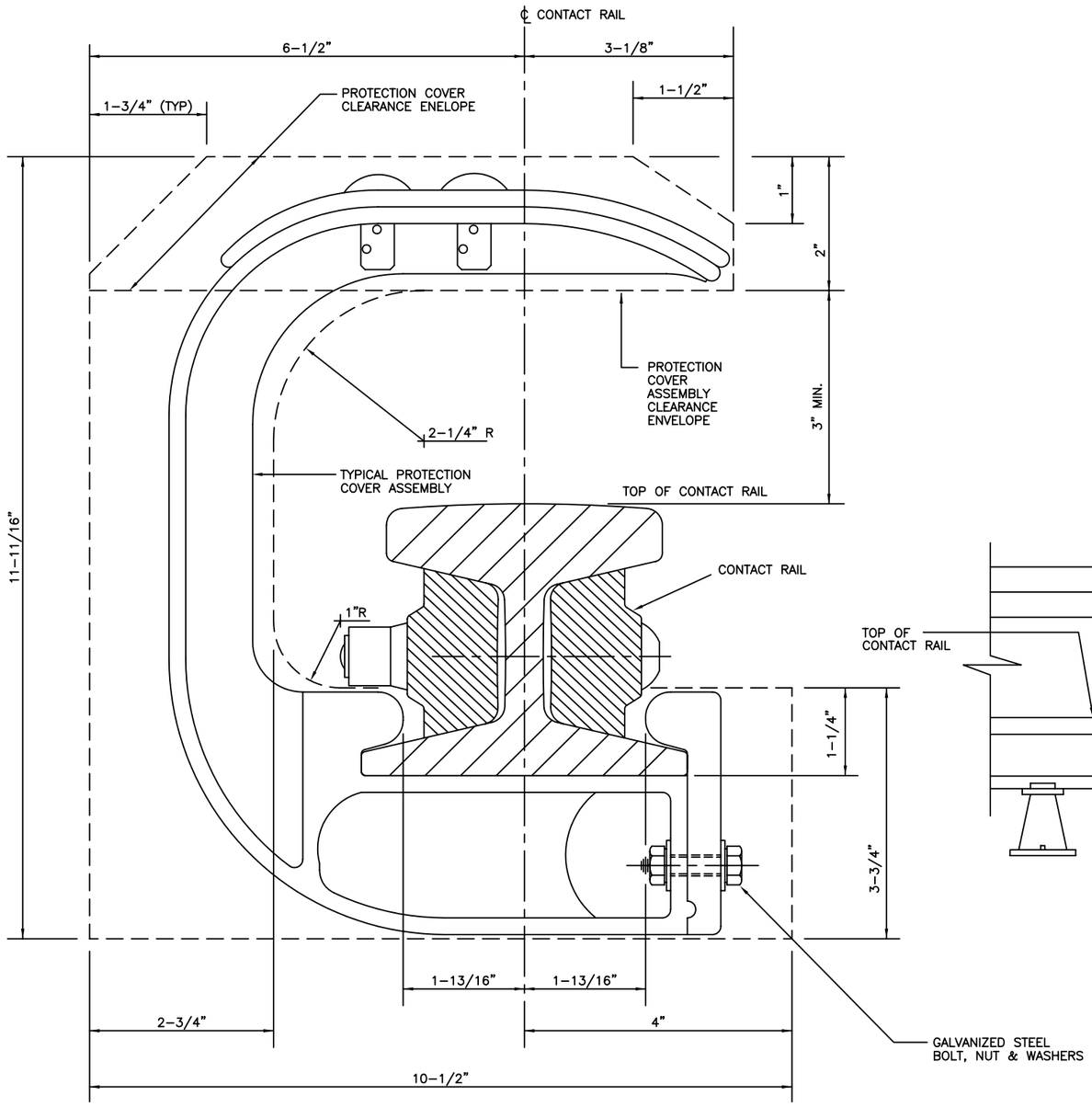

TYPE B
PROTECTION COVER ASSEMBLY
CLEARANCE ENVELOPE
1"=0'–1"

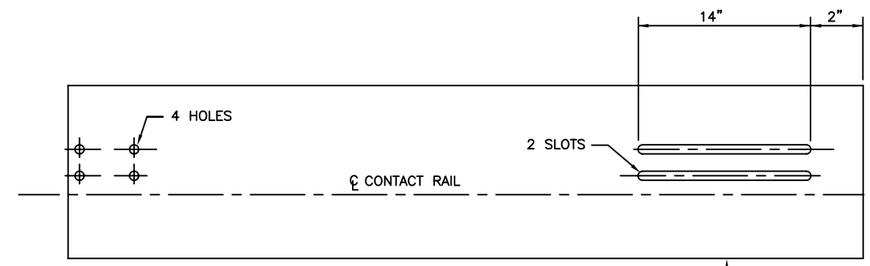

TOP VIEW
N.T.S

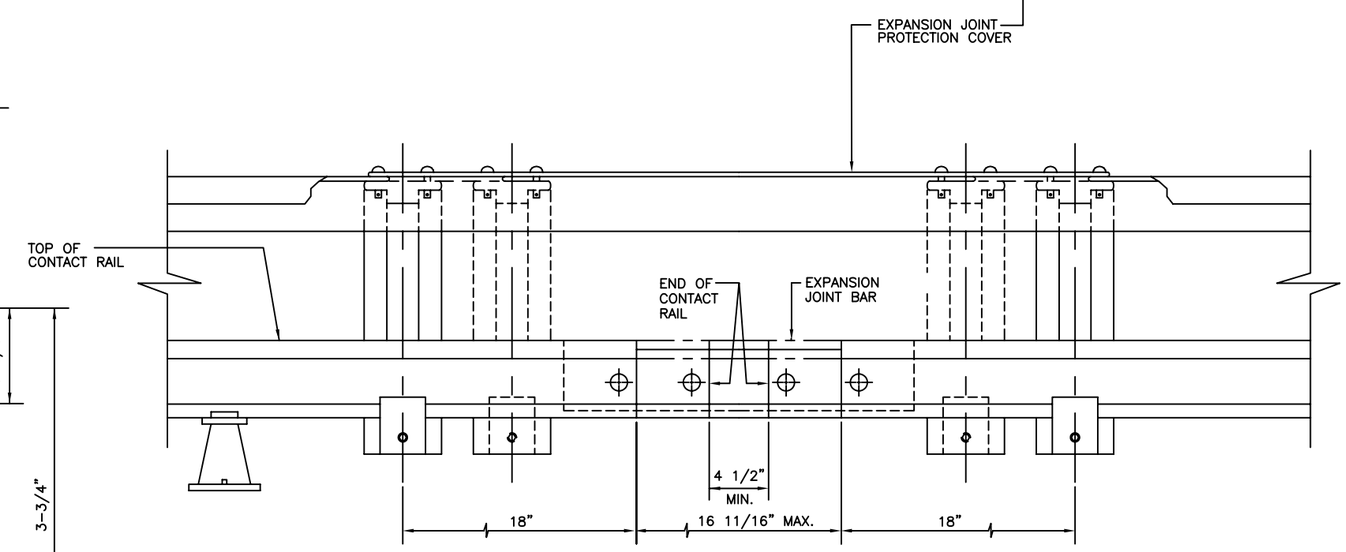

TYPICAL BRACKET & PROTECTION COVER
AT EXPANSION JOINT
N.T.S

NOTE:

1. TYPE B PROTECTION COVER ASSEMBLY IS USED IN ABOVE GROUND LOCATIONS WHERE CONTACT RAIL HEATER TAPE IS REQUIRED TO BE INSTALLED.

DESIGNED	W. TINKHAM	6–98 DATE
DRAWN	A. DAVIS	08/06 DATE
CHECKED	R.ROCKEFELLER	11/06 DATE
APPROVED	L. PADGETT	11/06 DATE

REFERENCE DRAWINGS

NUMBER	DESCRIPTION

REVISIONS

DATE	BY	DESCRIPTION
12/2006	CENF	MINOR REVISION

WASHINGTON METROPOLITAN AREA TRANSIT AUTHORITY

OFFICE OF ENGINEERING SUPPORT SERVICES

SUBMITTED L.R.Padgett 10/2007 DATE

APPROVED 10/2007 DATE

CONTACT RAIL DESIGN DRAWING
COMPOSITE RAIL
WITH TYPE B PROTECTION COVER

SCALE AS NOTED

DRAWING NO. DD–TW–CR–015

WMATA CONFIDENTIAL INFORMATION - DO NOT DISCLOSE WITHOUT EXPRESS WRITTEN APPROVAL OF THE GENERAL MANAGER OF THE AUTHORITY

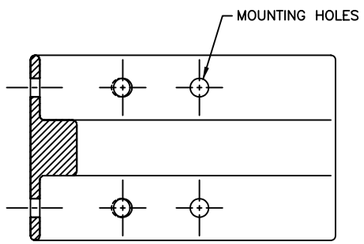

SECTION A–A

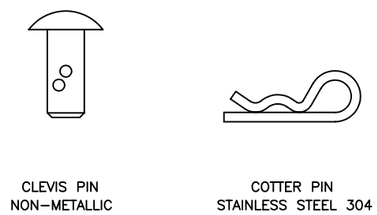

FASTENER

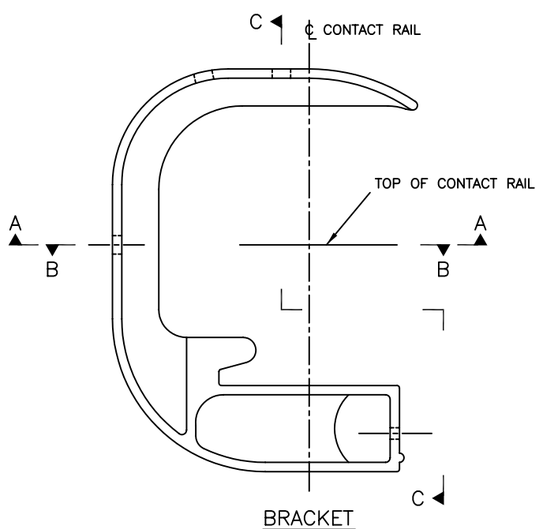

BRACKET
FIBERGLASS

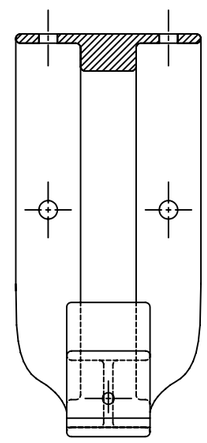

SECTION C–C

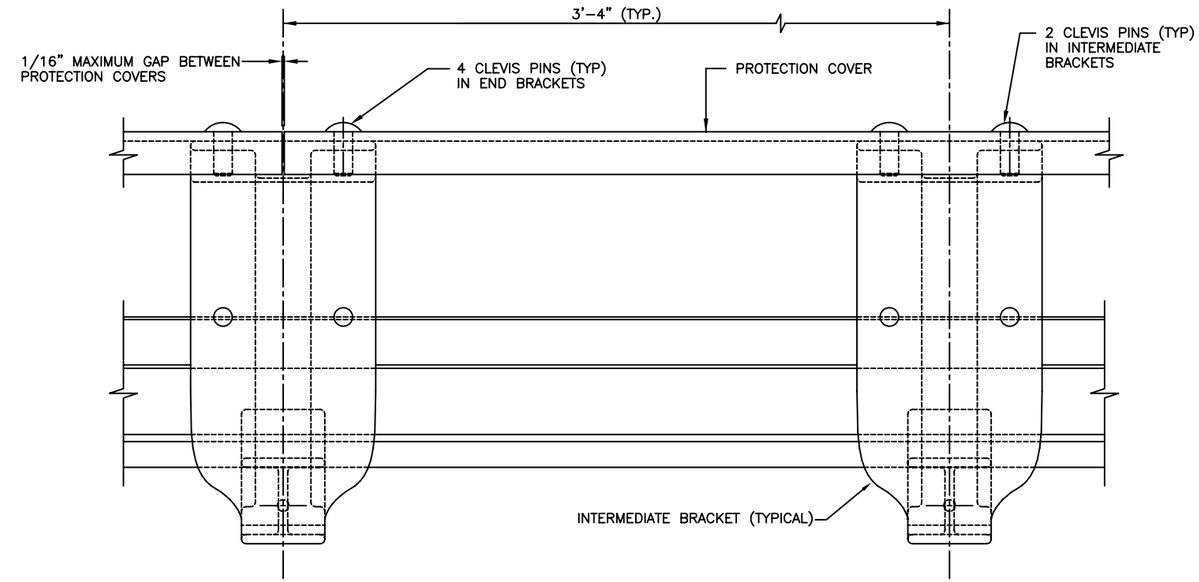

TYPICAL INSTALLATION

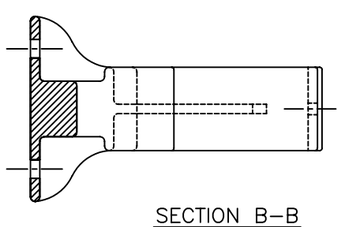

SECTION B–B

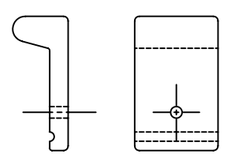

CLAMP
FIBERGLASS

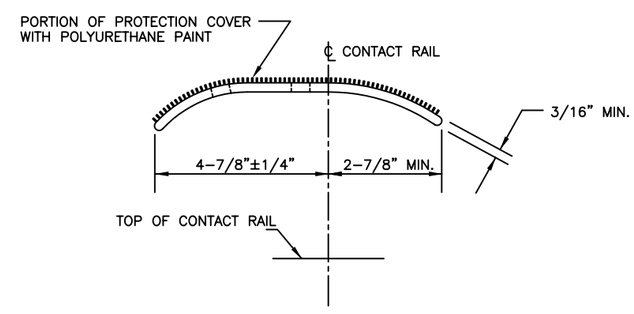

PROTECTION COVER
FIBERGLASS

DESIGNED	W. TINKHAM	6–98 DATE
DRAWN	A. DAVIS	08/06 DATE
CHECKED	R.ROCKEFELLER	11/06 DATE
APPROVED	L. PADGETT	11/06 DATE

REFERENCE DRAWINGS

NUMBER	DESCRIPTION

REVISIONS

DATE	BY	DESCRIPTION
12/2006	CENF	MINOR REVISION

WASHINGTON METROPOLITAN AREA TRANSIT AUTHORITY

OFFICE OF ENGINEERING SUPPORT SERVICES

SUBMITTED LRPadgett 10/2007 DATE

APPROVED 10/2007 DATE

CONTACT RAIL DESIGN DRAWING
TYPE B PROTECTION COVER ASSEMBLY
DETAILS AND SECTIONS

SCALE 1/2"= 1"

DRAWING NO. DD–TW–CR–016

WMATA CONFIDENTIAL INFORMATION - DO NOT DISCLOSE WITHOUT EXPRESS WRITTEN APPROVAL OF THE GENERAL MANAGER OF THE AUTHORITY

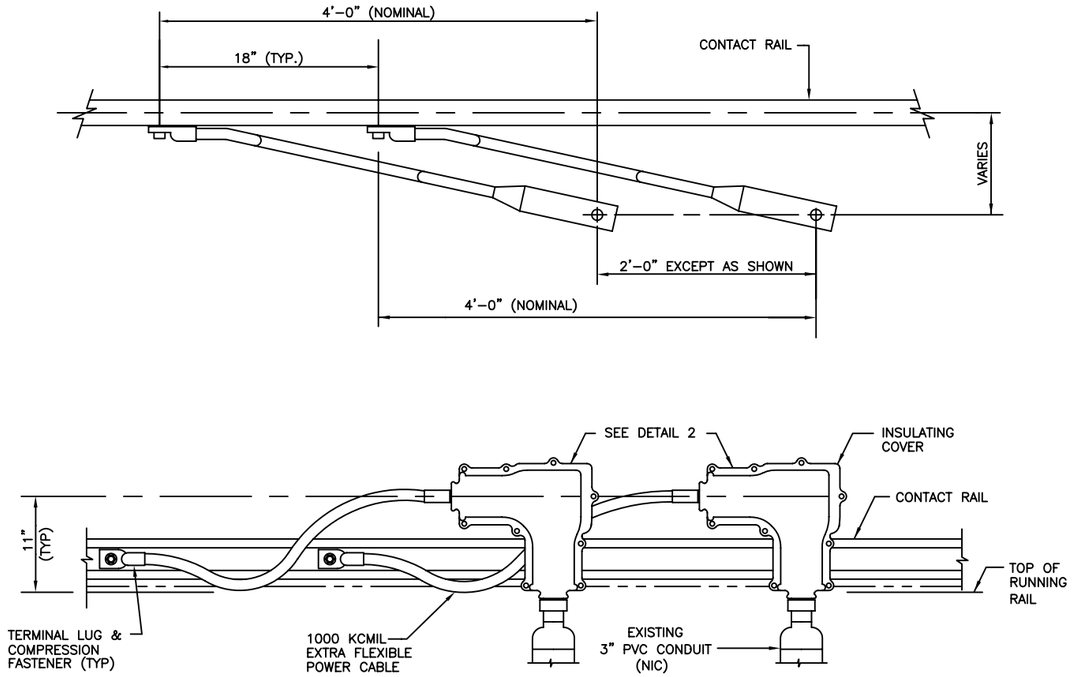

DETAIL "1"
TYPICAL CONNECTION FOR COMPOSITE CONTACT RAIL
N.T.S.

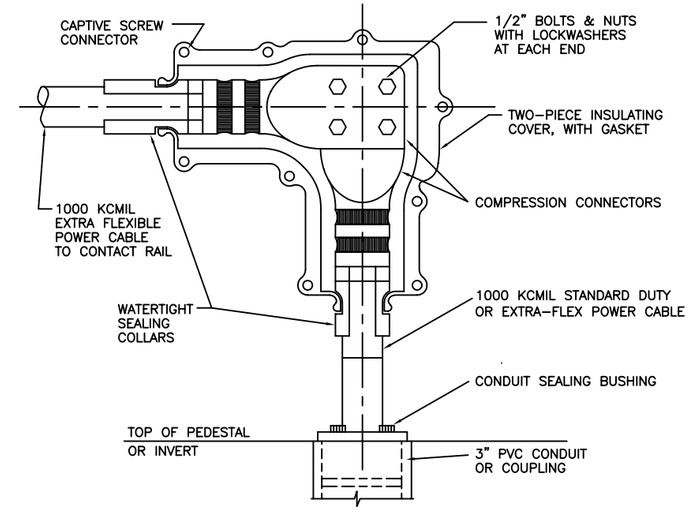

DETAIL "2"
CABLE CONNECTOR ASSEMBLY
N.T.S.

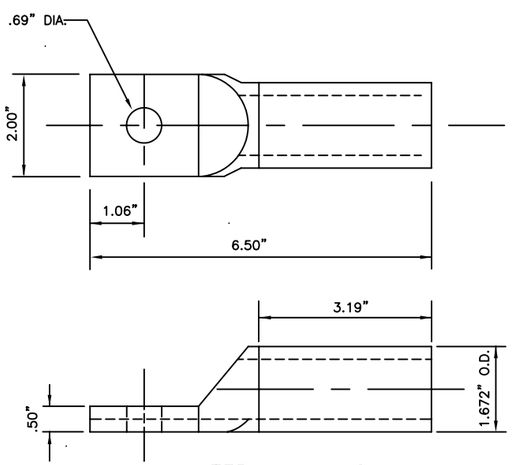

TERMINAL LUG
N.T.S.

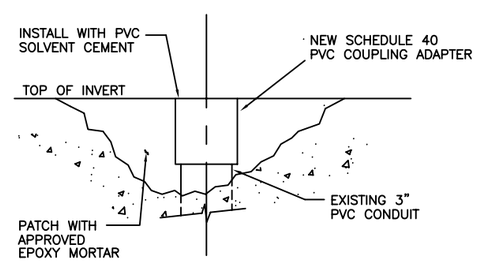

METHOD FOR REPAIRING
BROKEN TRACTION POWER CONDUIT
SCALE: N.T.S.

DESIGNED	W. TINKHAM	6-98 DATE
DRAWN	A. DAVIS	08/06 DATE
CHECKED	R.ROCKEFELLER	11/06 DATE
APPROVED	L. PADGETT	11/06 DATE

REFERENCE DRAWINGS

NUMBER	DESCRIPTION

REVISIONS

DATE	BY	DESCRIPTION
12/2006	CENF	MINOR REVISIONS

WASHINGTON METROPOLITAN AREA TRANSIT AUTHORITY
OFFICE OF ENGINEERING SUPPORT SERVICES

SUBMITTED LRPadgett 10/2007 DATE
APPROVED 10/2007 DATE

CONTACT RAIL DESIGN DRAWING
COMPOSITE RAIL
TYPICAL CONDUIT AND CABLE ARRANGEMENT

SCALE: NONE
DRAWING NO. DD-TW-CR-017

WMATA CONFIDENTIAL INFORMATION - DO NOT DISCLOSE WITHOUT EXPRESS WRITTEN APPROVAL OF THE GENERAL MANAGER OF THE AUTHORITY

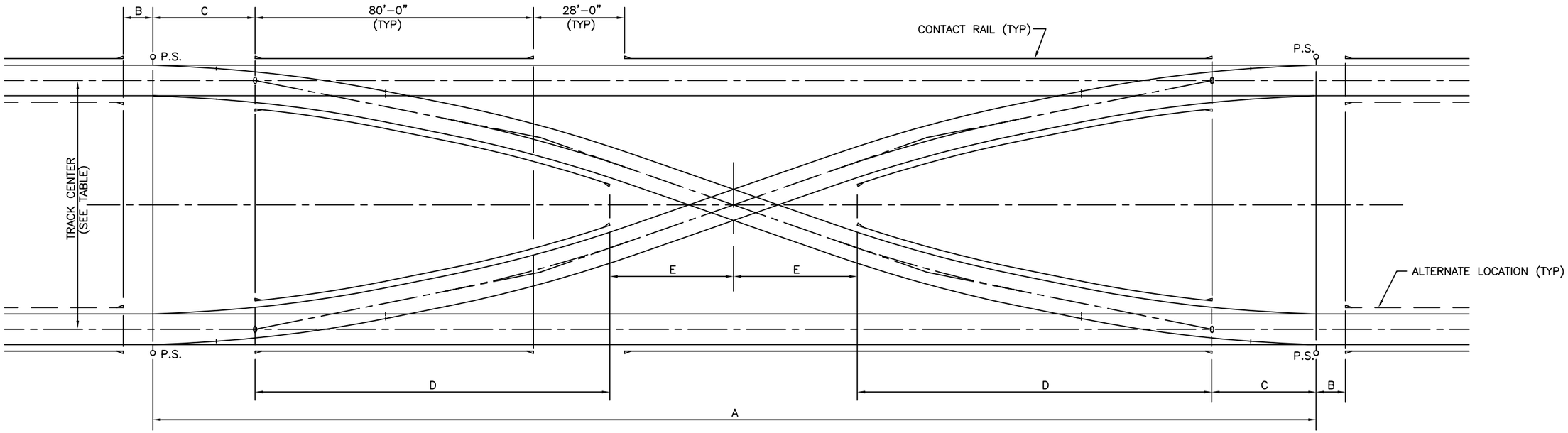

#10 DOUBLE CROSSOVER PLAN

TRACK CENTERS	A	B	C	D	E
14'–0"	202.48'	10'–0"	31'–42"	15.0'	53.5'
36'–10"	352.81'	10'–0"	31'–42"	105.0'	41'
40'–6"	369.71'	7.625'	31'–42"	124.0'	30.865'

NOTE:

1. FOR LOCATION AND DETAILS OF CONTACT RAIL CABLES AT TRACKSIDE SEE ELECTRICAL DD DRAWINGS.
2. CONTRACT RAIL LAYOUTS/ ARRANGEMENTS MAY VARY FROM CONTRACT TO CONTRACT AND SHOULD VERIFIED PRIOR TO ANY PROCUREMENT OR FABRICATION PHASES.

DESIGNED	W. TINKHAM	10–98 DATE
DRAWN	A. DAVIS	08/06 DATE
CHECKED	R.ROCKEFELLER	11/06 DATE
APPROVED	L. PADGETT	11/06 DATE

REFERENCE DRAWINGS

NUMBER	DESCRIPTION

REVISIONS

DATE	BY	DESCRIPTION
12/2006	CENF	MINOR REVISIONS
09/06		⚠ ADDED NOTE NO. 2

WASHINGTON METROPOLITAN AREA TRANSIT AUTHORITY

OFFICE OF ENGINEERING SUPPORT SERVICES

SUBMITTED LRPadgett 10/2007 DATE

APPROVED 10/2007 DATE

CONTACT RAIL DESIGN DRAWING
CONTACT RAIL ARRANGEMENT
No. 10 DOUBLE CROSSOVER
14'–0", 36'–10" AND 40'–6" TRACK CENTERS

SCALE NONE

DRAWING NO. DD–TW–CR–022

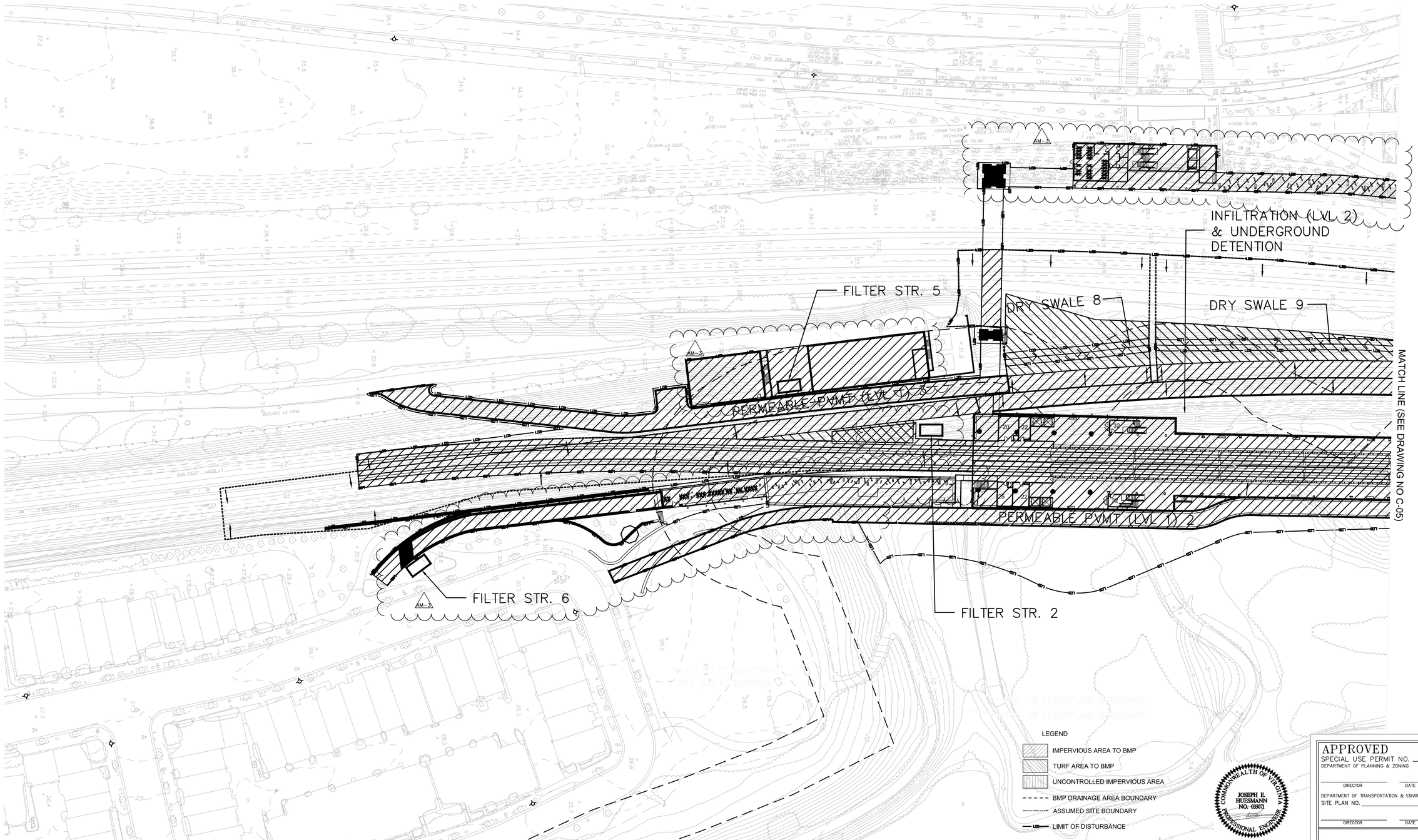

NOTES:
1) PERMEABLE PAVEMENT (LVL 1) 2 SHALL BE PERVIOUS CONCRETE, AND SHALL ADHERE TO VIRGINIA DEQ STORMWATER DESIGN SPECIFICATION NO. 7
2) FILTER STRUCTURES SHALL BE FILTERING MANUFACTURED DEVICES WITH MINIMUM EMC %TP REMOVAL EFFICIENCY OF 50 (PER VIRGINIA STORMWATER BMP CLEARINGHOUSE).

APPROVED
SPECIAL USE PERMIT NO. _____
DEPARTMENT OF PLANNING & ZONING
DIRECTOR DATE
DEPARTMENT OF TRANSPORTATION & ENVIRONMENTAL SERVICES
SITE PLAN NO. _____
DIRECTOR DATE
CHAIRMAN, PLANNING COMMISSION DATE
DATE RECORDED _____
INSTRUMENT NO. DEED BOOK NO. PAGE NO.

DESIGNED _____ DATE
DRAWN MR DATE
CHECKED MP DATE
APPROVED ... DATE

REFERENCE DRAWINGS

NUMBER	DESCRIPTION

REVISIONS

DATE	BY	DESCRIPTION
02/26/16	MR	REVISED PER CITY COMMENTS
03/31/16	MR	REV. PER CITY COMMENTS - PRELIM. SITE PLAN
05/20/16	JH	REV. PER CITY COMMENTS
03/08/17	JH	AMENDMENT 3 REVISIONS

WASHINGTON METROPOLITAN AREA TRANSIT AUTHORITY

DEPARTMENT OF TRANSIT INFRASTRUCTURE AND ENGINEERING SERVICES
OFFICE OF MAJOR CAPITAL PROJECTS

SUBMITTED _____ DATE
APPROVED _____ CHIEF ENGINEER DATE

POTOMAC YARD METRORAIL STATION
GENERAL PLANS
DEVELOPMENT PRELIMINARY SITE PLAN
BMP/SWM PLAN 1 OF 3

SCALE 1" = 40'
DRAWING NO. C - 04
SHEET NO. 15 OF 27

Mar 07,2017-2:45pm
U:\WMATA On-Call Planning Services\Potomac Yd Station EIS\05 Technical\05 General Plans\DEVP Concept\DEVP Rev 1\PMAS SPM1 022717.dwg

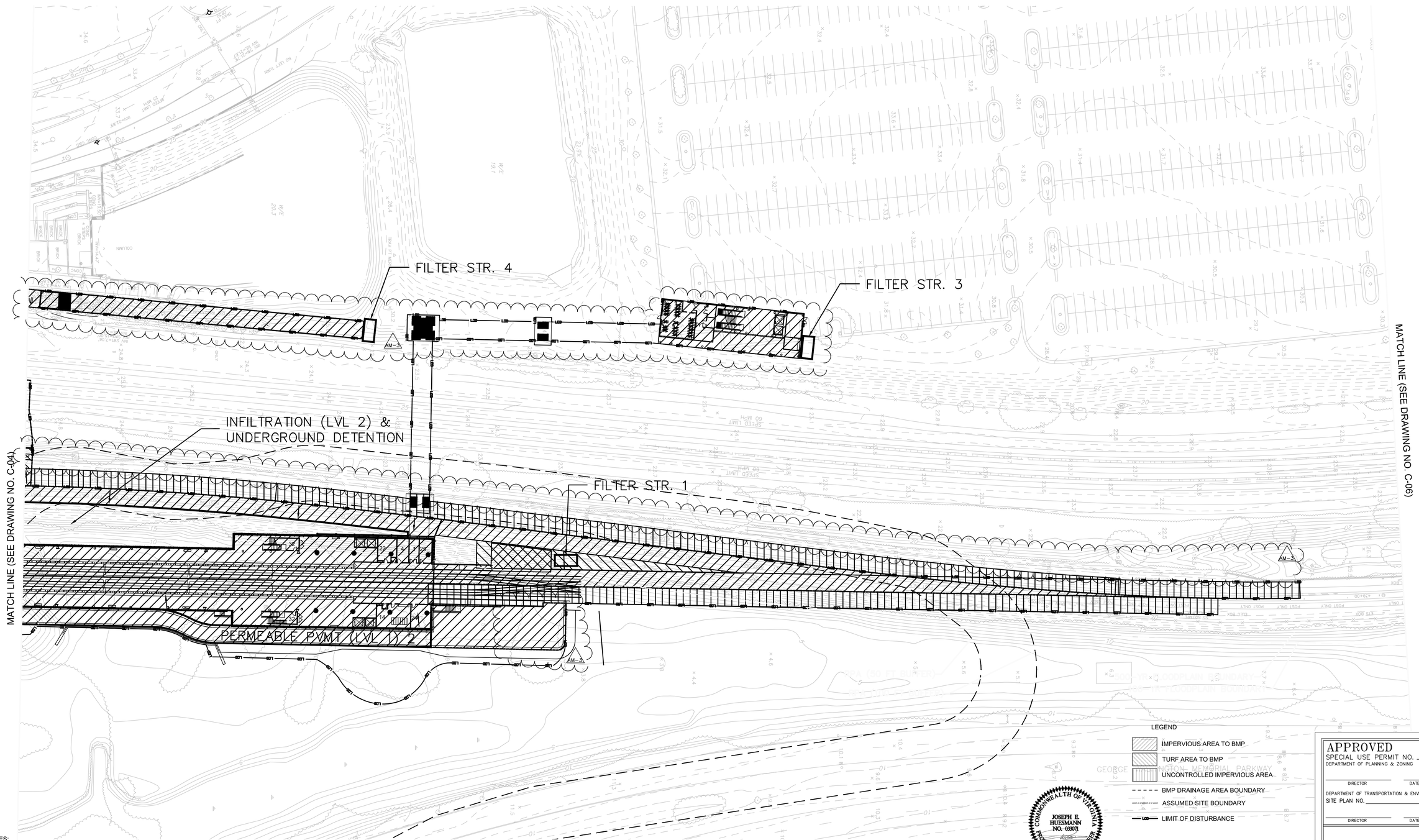

NOTES:
1) PERMEABLE PAVEMENT (LVL 1) 2 SHALL BE PERVIOUS CONCRETE, AND SHALL ADHERE TO VIRGINIA DEQ STORMWATER DESIGN SPECIFICATION NO. 7
2) FILTER STRUCTURES SHALL BE FILTERING MANUFACTURED DEVICES WITH MINIMUM EMC %TP REMOVAL EFFICIENCY OF 50 (PER VIRGINIA STORMWATER BMP CLEARINGHOUSE).

APPROVED
SPECIAL USE PERMIT NO. _____
DEPARTMENT OF PLANNING & ZONING
DIRECTOR DATE
DEPARTMENT OF TRANSPORTATION & ENVIRONMENTAL SERVICES
SITE PLAN NO. _____
DIRECTOR DATE
CHAIRMAN, PLANNING COMMISSION DATE
DATE RECORDED _____
INSTRUMENT NO. DEED BOOK NO. PAGE NO.

DESIGNED _____ DATE
DRAWN MR DATE
CHECKED MP DATE
APPROVED ... DATE

REFERENCE DRAWINGS

NUMBER	DESCRIPTION

REVISIONS

DATE	BY	DESCRIPTION
02/26/16	MR	REVISED PER CITY COMMENTS
03/31/16	MR	REV. PER CITY COMMENTS - PRELIM. SITE PLAN
05/20/16	JH	REV. PER CITY COMMENTS
03/08/17	JH	AMENDMENT 3 REVISIONS

WASHINGTON METROPOLITAN AREA TRANSIT AUTHORITY
DEPARTMENT OF TRANSIT INFRASTRUCTURE AND ENGINEERING SERVICES
OFFICE OF MAJOR CAPITAL PROJECTS

SUBMITTED _____ DATE
APPROVED _____ CHIEF ENGINEER DATE

POTOMAC YARD METRORAIL STATION
GENERAL PLANS
DEVELOPMENT PRELIMINARY SITE PLAN
BMP/SWM PLAN 2 OF 3

SCALE 1" = 40'
DRAWING NO. C - 05
SHEET NO. 16 OF 27

Mar 07,2017-2:41pm
J:\WMATA Oc-Cpl Planning Services\Potomac Yd Station EIS\KB Technical\KB General Plans\DSUP Concept\DSUP Rev 1\PMAS SPM1 022717.dwg

LEGEND

- IMPERVIOUS AREA TO BMP
- TURF AREA TO BMP
- UNCONTROLLED IMPERVIOUS AREA
- BMP DRAINAGE AREA BOUNDARY
- ASSUMED SITE BOUNDARY
- LIMIT OF DISTURBANCE

COMMONWEALTH OF VIRGINIA
JOSEPH E. HUESMANN
NO. 03307
PROFESSIONAL ENGINEER

THE PROFESSIONAL SEAL AND SIGNATURE ON THIS DOCUMENT ARE VALID ONLY FOR THE PRINTED VERSION OF THIS DOCUMENT.

APPROVED
SPECIAL USE PERMIT NO. _____
DEPARTMENT OF PLANNING & ZONING
DIRECTOR — DATE
DEPARTMENT OF TRANSPORTATION & ENVIRONMENTAL SERVICES
SITE PLAN NO. _____
DIRECTOR — DATE
CHAIRMAN, PLANNING COMMISSION — DATE
DATE RECORDED _____
INSTRUMENT NO. — DEED BOOK NO. — PAGE NO.

DESIGNED		DATE
DRAWN	MR	DATE
CHECKED	MP	DATE
APPROVED	...	DATE

REFERENCE DRAWINGS

NUMBER	DESCRIPTION

REVISIONS

DATE	BY	DESCRIPTION
02/26/16	MR	REVISED PER CITY COMMENTS
03/31/16	MR	REV. PER CITY COMMENTS - PRELIM. SITE PLAN
05/20/16	JH	REV. PER CITY COMMENTS
03/08/17	JH	AMENDMENT 3 REVISIONS

WASHINGTON METROPOLITAN AREA TRANSIT AUTHORITY

DEPARTMENT OF TRANSIT INFRASTRUCTURE AND ENGINEERING SERVICES
OFFICE OF MAJOR CAPITAL PROJECTS

SUBMITTED — DATE
APPROVED — CHIEF ENGINEER — DATE

POTOMAC YARD METRORAIL STATION
GENERAL PLANS
DEVELOPMENT PRELIMINARY SITE PLAN
BMP/SWM PLAN 3 OF 3

SCALE	DRAWING NO.	SHEET NO.
1" = 40'	C - 06	17 OF 27

Mar 07,2017-2:49pm
U:\WMATA On-Call Planning Services\Potomac Yd Station EIS\05 Technical\05 General Plans\DSUP Concept\DSUP Rev 1\PMAS SBMP 022717.dwg

Virginia Runoff Reduction Method ReDevelopment Worksheet - v2.8 - June 2014
To be used w/ DRAFT 2013 BMP Standards and Specifications
Site Data

Project Name: Potomac Yard Metro Station	
Date: 3/8/2017	

	data input cells
	calculation cells
	constant values

Post-ReDevelopment Project & Land Cover Information

Total Disturbed Acreage 6.40

Constants

Annual Rainfall (inches)	43		
Target Rainfall Event (inches)	1.00		
Phosphorus EMC (mg/L)	0.26	Nitrogen EMC (mg/L)	1.86
Target Phosphorus Target Load (lb/acre/yr)	0.41		
Pj	0.90		

Pre-ReDevelopment Land Cover (acres)

	A soils	B Soils	C Soils	D Soils	Totals
Forest/Open Space (acres) -- undisturbed, protected forest/open space or reforested land	0.00	0.00	0.00	1.53	1.53
Managed Turf (acres) -- disturbed, graded for yards or other turf to be mowed/managed	0.00	0.00	0.00	3.53	3.53
Impervious Cover (acres)	0.00	0.00	0.00	1.34	1.34
			Total		6.40

Post-ReDevelopment Land Cover (acres)

	A soils	B Soils	C Soils	D Soils	Totals
Forest/Open Space (acres) -- undisturbed, protected forest/open space or reforested land	0.00	0.00	0.00	0.00	0.00
Managed Turf (acres) -- disturbed, graded for yards or other turf to be mowed/managed	0.00	0.00	0.00	1.88	1.88
Impervious Cover (acres)	0.00	0.00	0.00	4.52	4.52
			Total		6.40
Area Check	Okay	Okay	Okay	Okay	

Rv Coefficients

	A soils	B Soils	C Soils	D Soils
Forest/Open Space	0.02	0.03	0.04	0.05
Managed Turf	0.15	0.20	0.22	0.25
Impervious Cover	0.95	0.95	0.95	0.95

Land Cover Summary Pre-ReDevelopment	Listed	Adjusted[1]
Forest/Open Space Cover (acres)	1.53	0.00
Composite Rv(forest)	0.05	0.00
% Forest	24%	0%
Managed Turf Cover (acres)	3.53	1.88
Composite Rv(turf)	0.25	0.25
% Managed Turf	55%	58%
Impervious Cover (acres)	1.34	1.34
Rv(impervious)	0.95	0.95
% Impervious	21%	42%
Total Site Area (acres)	6.40	3.22
Site Rv	0.35	0.54
Pre-Development Treatment Volume (acre-ft)	0.1860	0.1453
Pre-Development Treatment Volume (cubic feet)	8,102	6,327
Pre-Development Load (TP) (lb/yr)	5.09	3.98
Pre-Development Load (TN) (lb/yr)	36.42	

[1] *Adjusted* **Land Cover Summary** reflects the pre redevelopment land cover minus the pervious land cover (forest/open space or managed turf) acreage proposed for new impervious cover. The adjusted total acreage is consistent with the Post Redevelopment acreage (minus the acreage of new impervious cover). The load reduction requriement for the new impervious cover to meet the new development load limit is computed in **Column I**.

Land Cover Summary Post-ReDevelopment	
Forest/Open Space Cover	0.00
Composite Rv(forest)	0.00
% Forest	0%
Managed Turf Cover (acres)	1.88
Composite Rv(turf)	0.25
% Managed Turf	58%
ReDev. Impervious Cover (acres)	1.34
Rv(impervious)	0.95
% Impervious	42%
Total ReDev. Site Area (acres)	3.22
ReDev. Site Rv	0.54
Post-ReDevelopment Treatment Volume (acre-ft)	0.1453
Post-ReDevelopment Treatment Volume (cubic feet)	6,327
Post-ReDevelopment Load (TP) (lb/yr)	3.98

Land Cover Summary Post-ReDevelopment New Impervious	
New Impervious Cover (acres)	3.18
Rv(impervious)	0.95
% Impervious	100%
Total New Dev. Site Area (acres)	3.18
New Dev. Site Rv	0.95
Post-Development Treatment Volume (acre-ft)	0.2518
Post-Development Treatment Volume (cubic feet)	10,966
Post-Development Load (TP) (lb/yr)	6.89

Maximum % Reduction Required Below Pre-ReDevelopment Load	20%
TP Load Reduction Required for Redeveloped Area (lb/yr)	0.80
TP Load Reduction Required for New Impervious Area (lb/yr)	5.59
Total Load Reduction Required (lb/yr)	6.38
Post-Development Load (TN) (lb/yr)	77.73

Site Results

	D.A. A	D.A. B	D.A. C	D.A. D	D.A. E	AREA CHECK
IMPERVIOUS COVER	4.52	0.00	0.00	0.00	0.00	OK.
IMPERVIOUS COVER TREATED	4.43	0.00	0.00	0.00	0.00	OK.
TURF AREA	1.88	0.00	0.00	0.00	0.00	OK.
TURF AREA TREATED	1.31	0.00	0.00	0.00	0.00	OK.
AREA CHECK	OK.	OK.	OK.	OK.	OK.	

Phosphorous

TOTAL PHOSPHOROUS LOAD REDUCTION REQUIRED (LB/YEAR)	6.38
RUNOFF REDUCTION (cf)	5370
PHOSPHOROUS LOAD REDUCTION ACHIEVED (LB/YR)	6.39
ADJUSTED POST-DEVELOPMENT PHOSPHOROUS LOAD (TP) (lb/yr)	4.48
REMAINING PHOSPHOROUS LOAD REDUCTION (LB/YR) NEEDED	CONGRATULATIONS!! YOU EXCEEDED THE TARGET REDUCTION BY 0 LB/YEAR!!

Nitrogen (for information purposes)

RUNOFF REDUCTION (cf)	5370
NITROGEN LOAD REDUCTION ACHIEVED (LB/YR)	27.86
ADJUSTED POST-DEVELOPMENT NITROGEN LOAD (TP) (lb/yr)	49.87

Drainage Area A

Drainage Area A Land Cover (acres)

	A soils	B Soils	C Soils	D Soils	Totals	Land Cover Rv
Forest/Open Space (acres) -- undisturbed, protected forest/open space or reforested land	0.00	0.00	0.00	0.00	0.00	0.00
Managed Turf (acres) -- disturbed, graded for yards or other turf to be mowed/managed	0.00	0.00	0.00	1.88	1.88	0.25
Impervious Cover (acres)	0.00	0.00	0.00	4.52	4.52	0.95
			Total		6.40	

Post Development Treatment Volume (cf) 17293

Apply Runoff Reduction Practices to Reduce Treatment Volume & Post-Development Load in Drainage Area A

Credit	Unit	Description of Credit	Credit	Credit Area (acres)	Volume from Upstream RR Practice (cf)	Runoff Reduction (cf)	Remaining Runoff Volume (cf)	Phosphorus Efficiency (%)	Phosphorus Load from Upstream RR Practices (lbs)	Untreated Phosphorus Load to Practice (lbs.)	Phosphorus Removed By Practice (lbs.)	Remaining Phosphorus Load (lbs.)	Downstream Treatment to be Employed
3. Permeable Pavement													
3.a. Permeable Pavement #1 (Spec #7)	acres of permeable pavement + acres of "external" (upgradient) impervious pavement	45% runoff volume reduction	0.45	1.30	0	2017	2466	25	0.00	2.81	1.65	1.16	
5. Dry Swale													
5.b. Dry Swale #2 (Spec #10)	impervious acres draining to dry swale	60% runoff volume reduction	0.60	0.15	0	310	207	40	0.00	0.32	0.25	0.08	
	turf acres draining to dry swale	60% runoff volume reduction	0.60	0.80	0	436	290	40	0.00	0.46	0.35	0.11	
7. Infiltration													
7.b. Infiltration #2 (Spec #8)	impervious acres draining to infiltration	90% runoff volume reduction	0.90	0.84	0	2607	290	25	0.00	1.82	1.68	0.14	
	turf acres draining to infiltration	90% runoff volume reduction	0.90	0.00	0	0	0	25	0.00	0.00	0.00	0.00	

TOTAL IMPERVIOUS COVER TREATED (ac)	2.29
TOTAL TURF AREA TREATED (ac)	0.80

AREA CHECK OK.

TOTAL PHOSPHOROUS REMOVAL REQUIRED ON SITE (lb/yr)	6.38
TOTAL RUNOFF REDUCTION IN D.A. A (cf)	5,370
PHOSPHORUS REMOVAL FROM RUNOFF REDUCTION PRACTICES IN D.A. A (lb/yr)	3.93

SEE WATER QUALITY COMPLIANCE TAB FOR SITE COMPLIANCE CALCULATIONS

Apply Practices that Remove Pollutants but Do Not Reduce Runoff Volume

Practice	Unit	Description of Credit	Credit	Area (excluding areas treated by upstream practices)	Runoff from Upstream RR Practices (cf)	Runoff Reduction (cf)	Remaining Runoff Volume (cf)	Phosphorus Efficiency (%)	Phosphorus Load from Upstream RR Practices (lbs)	Untreated Phosphorus Load to Practice (lbs.)	Phosphorus Removed By Practice (lbs.)	Remaining Phosphorus Load (lbs.)	Downstream Treatment to be Employed
14. Manufactured BMP													
StormFilter	impervious acres draining to device	0% runoff volume reduction	0.00	2.14	0.00	0	7380	50	0.00	4.63	2.32	2.32	
	turf acres draining to device	0% runoff volume reduction	0.00	0.51	0.00	0	1759	50	0.00	0.29	0.15	0.15	

TOTAL IMPERVIOUS COVER TREATED (ac)	4.43
TOTAL TURF AREA TREATED (ac)	1.31

AREA CHECK OK.

PHOSPHORUS REMOVAL BY PRACTICES THAT DO NOT REDUCE RUNOFF VOLUME IN D.A. A	2.46
TOTAL PHOSPHORUS REMOVAL IN D.A. A (lb/yr)	6.39

SEE WATER QUALITY COMPLIANCE TAB FOR SITE COMPLIANCE CALCULATIONS

NITROGEN REMOVAL BY PRACTICES THAT DO NOT REDUCE RUNOFF VOLUME IN D.A. A	0.00
TOTAL NITROGEN REMOVAL IN D.A. A (lb/yr)	27.86

	1-year storm	2-year storm	10-year storm
Target Rainfall Event (in)	2.70	3.20	5.20

Drainage Area A	
Drainage Area (acres)	6.40
Runoff Reduction Volume (cf)	5,370
Drainage Area B	
Drainage Area (acres)	0.00
Runoff Reduction Volume (cf)	0
Drainage Area C	
Drainage Area (acres)	0.00
Runoff Reduction Volume (cf)	0
Drainage Area D	
Drainage Area (acres)	0.00
Runoff Reduction Volume (cf)	0
Drainage Area E	
Drainage Area (acres)	0.00
Runoff Reduction Volume (cf)	0

Based on the use of Runoff Reduction practices in the selected drainage areas, the spreadsheet calculates an adjusted $RV_{Developed}$ and adjusted Curve Number.

Drainage Area A		A soils	B Soils	C Soils	D Soils
Forest/Open Space -- undisturbed, protected forest/open space or reforested land	Area (acres)	0.00	0.00	0.00	0.00
	CN	30	55	70	77
Managed Turf -- disturbed, graded for yards or other turf to be mowed/managed	Area (acres)	0.00	0.00	0.00	1.88
	CN	39	61	74	80
Impervious Cover	Area (acres)	0.00	0.00	0.00	4.52
	CN	98	98	98	98
				Weighted CN	S
				93	0.75

	1-year storm	2-year storm	10-year storm
$RV_{Developed}$ (in) with no Runoff Reduction	1.97	2.45	4.39
$RV_{Developed}$ (in) with Runoff Reduction	1.74	2.21	4.16
Adjusted CN	90	90	91

NOTE: DUE TO LIMITATIONS OF VRRM SPREADSHEET REGARDING TREATING UNDISTURBED EXISTING IMPERVIOUS AREA, IMPERVIOUS, DISTURBED AND SITE AREAS MAY NOT MATCH THOSE SHOWN ON COVER.

AM-3

COMMONWEALTH OF VIRGINIA
JOSEPH E. HUESMANN
NO. 033071
PROFESSIONAL ENGINEER

APPROVED
SPECIAL USE PERMIT NO. _____
DEPARTMENT OF PLANNING & ZONING
DIRECTOR DATE
DEPARTMENT OF TRANSPORTATION & ENVIRONMENTAL SERVICES
SITE PLAN NO. _____
DIRECTOR DATE
CHAIRMAN, PLANNING COMMISSION DATE
DATE RECORDED _____
INSTRUMENT NO. DEED BOOK NO. PAGE NO.

DESIGNED		DATE
DRAWN	MR	DATE
CHECKED	MP	DATE
APPROVED	...	DATE

REFERENCE DRAWINGS

NUMBER	DESCRIPTION

REVISIONS

DATE	BY	DESCRIPTION
02/26/16	MR	REVISED PER CITY COMMENTS
03/31/16	MR	REV. PER CITY COMMENTS - PRELIM. SITE PLAN
05/20/16	JH	REV. PER CITY COMMENTS
03/08/17	JH	AMENDMENT 3 REVISIONS

WASHINGTON METROPOLITAN AREA TRANSIT AUTHORITY

DEPARTMENT OF TRANSIT INFRASTRUCTURE AND ENGINEERING SERVICES
OFFICE OF MAJOR CAPITAL PROJECTS

SUBMITTED _____ DATE
APPROVED _____ CHIEF ENGINEER DATE

POTOMAC YARD METRORAIL STATION
GENERAL PLANS
DEVELOPMENT PRELIMINARY SITE PLAN
BMP CALCULATIONS

SCALE	DRAWING NO.	SHEET NO.
N/A	C-07	18 OF 27

WS: 02 2017 - 3:33pm
I:\WMATA On-Call Planning Services\Potomac Yd Station (DTLSP) Yard\SUP Special Plans\SUP Special\SUP Rev 1\13002.dwg

BMP NARRATIVE

EXISTING CONDITIONS
THE PROJECT SITE CONSISTS PRIMARILY OF WETLAND AND EXISTING RAIL BED. THE SITE IS LOCATED IN THE POTOMAC RIVER WATERSHED. THE SITE IS PRIMARILY LOCATED EAST OF THE EXISTING WMATA TRACKS AND RUNOFF DRAINS GENERALLY TO A WETLAND/SWAMP TO THE EAST.

PROPOSED CONDITIONS
PROPOSED IMPROVEMENTS CONSIST OF SECTION OF NEW RAIL BED AND NEW METRO PLATFORM, A POWER SWITCHGEAR BUILDING, AND PEDESTRIAN RAMPS AND BRIDGES TO PROVIDE STATION ACCESS FROM NEARBY LOCATIONS. RUNOFF FROM THE PROPOSED SITE WILL GENERALLY DRAIN TO A WETLAND/SWAMP TO THE EAST.

STORMWATER QUALITY
THE PROPOSED PROJECT INCREASES IMPERVIOUS AREA ON THE SITE BY 3.18AC. A REQUIRED 20% PHOSPHORUS REDUCTION OF 6.38LB/YR IS COMPUTED BY THE VRRM SPREADSHEET CALCULATIONS (SEE CALCULATIONS, NEXT SHEET).

STORMWATER WILL BE TREATED USING A VARIETY OF PROPRIETARY AND NON-PROPRIETARY BMPS (SEE BMP PLAN FOR DETAILS) INCLUDING GRASS CHANNELS, DRY SWALES, INFILTRATION, AND STORMFILTERS TO TREAT THE ALEXANDRIA TARGET WATER QUALITY VOLUME OF 8,212 CF.

STORMWATER QUANTITY
STORMWATER WILL BE TREATED USING AN UNDERGROUND DETENTION FACILITY LOCATED IN THE AREA BETWEEN THE EXISTING RAIL BED AND THE PROPOSED PLATFORM. IT WILL DISCHARGE INTO THE EXISTING WETLAND AREA. SEE STORAGE VOLUME CALCULATION (THIS SHEET) FOR CHANNEL PROTECTION (1-YR), ESTIMATED AT 13,340 CF, AND FLOOD CONTROL (10-YR), ESTIMATED AT 26,191 CF.

THE OUTFALLS FROM THE SITE DRAIN INTO A 5 ACRE WETLAND/SWAMP AREA, FROM WHICH THERE IS NO CLEARLY DEFINED OUTFALL. UNDERGROUND DETENTION FACILITY IS INTENDED TO KEEP RUNOFF RATES BELOW EXISTING CONDITIONS IN ORDER TO AVOID IMPACTING THIS OUTFALL WETLAND.

THE CALCULATIONS DEMONSTRATE THAT THE SITE HAS BEEN DEVELOPED TO INCREASE THE POST DEVELOPMENT PEAK RUNOFF RATE FROM THE PRE-DEVELOPMENT PEAK RUNOFF RATE FOR A TWO-YEAR AND TEN YEAR STORM CONSIDERED INDIVIDUALLY. THEREFORE, STORMWATER DETENTION IS PROVIDED PER THE REQUIREMENTS OF ARTICLE 13-109(F)(1) OF ALEXANDRIA ZONING ORDINANCE NOT TO RELEASE STORMWATER FROM THE SITE AT A HIGHER RATE THAN PRE DEVELOPMENT CONDITION.

Area Tabulation					RCN
LOD (site area)	278721	SF	6.40	ac	
Existing Impervious	58386	SF	1.34	ac	98
Existing Forest	66827	SF	1.53	ac	77
Existing Pervious	153508	SF	3.53	ac	80
				Composite	83
Proposed Impervious	197087	SF	4.52	ac	98
Proposed Forest	0	SF	0.00	ac	77
Proposed Pervious	81634	SF	1.88	ac	80
				Composite	93
Impervious Increase	138701	SF	3.18	ac	

BMP Facilities	Impervious	Turf	Overall	Width		Impervious	Turf	Overall
	(ac)	(ac)	(ac)	(ft)		(SF)	(SF)	(SF)
Dry Swale Lvl 2 w/ UD								
#8	0.07	0.35	0.43	8.9		3235	15407	18642
#9	0.08	0.45	0.52	6.1		3351	19477	22828
TOTAL Dry Swale	0.15	0.80	0.95			6586	34884	41470
Infiltration Lvl 2	0.84	0.40	1.24			36721	17397	54118
TOTAL Infiltration	0.84	0.40	1.24			36721	17397	54118
StormFilter								
#1	0.32	0.07	0.39			14096	3211	16819
#2	0.34	0.44	0.77			14732	19035	33730
#3	0.73	0.00	0.73			31675	0	31675
#4	0.29	0.00	0.29			12664	0	12664
#5	0.21	0.00	0.21			9152	0	9152
#6	0.25	0.00	0.25			10778	0	10778
TOTAL StormFilter	2.14	0.51	2.64			93097		114818
Permeable Pavement Lvl 1								
#2	1.09	0.00	1.09			47575		47575
#3	0.21	0.00	0.21			9048		9048
TOTAL Perm. Pave. Lvl 1	1.30	0.00	1.30			56623		56623
TOTAL	4.43	1.71	6.13			193027	52281	267029

Storage Volume

q_u taken from TR-55 Exhibit II

$$S = \frac{1000}{CN} - 10 \qquad Q(RV) = \frac{(P-0.2S)^2}{(P+0.8S)}$$

Land Use	HSG	Area	CN	I_a	Tc	P_1	I_a/P	q_{u1}	RV_1	q_{p1}	P_{10}	I_a/P	q_{u10}	RV_{10}	q_{p10}
		(ac)			(hr)	(in)		(csm/in)	(in)	(cfs)	(in)		(csm/in)	(in)	(cfs)
Pre-Developed															
Open space, good condition	D	3.53	80												
Woods, good condition	D	1.53	77												
Impervious	D	1.34	98												
		6.4	**83**	**0.41**	0.1	2.7	0.152	990	1.21	12	5.2	0.079	1000	3.36	33.6
Post-Developed															
Open space, good condition	D	1.88	80												
Woods, good condition	D	0.00	77												
Impervious	D	4.52	98												
		6.4	**93**	**0.151**	0.1	2.7	0.056	1000	1.97	19.7	5.2	0.029	1000	4.39	43.9
Adjusted RCN (with runoff reduction)		**6.4**	**90**	**0.222**	0.1	2.7	0.082	995	1.74	17.3	5.2	0.043	1000	4.16	41.6
Target, Woods															
Woods	D	6.4	77												
		6.4	**77**	**0.597**	0.1	2.7	0.221	970	1.01	9.8	5.2	0.115	995	2.83	28.2

Allowable Post-Development Peak Discharge

$Q_{1forest}$	9.8	cfs	$Q_{10forest}$	28.2	cfs
$RV_{1forest}$	1.01	in	$RV_{10forest}$	2.8	in
$Q_{1predevelopment}$	12	cfs	$Q_{10predevelopment}$	33.6	cfs
$RV_{1predevelopment}$	1.21	in	$RV_{10predevelopment}$	3.36	in
$Q_{1postdevelopment}$	19.7	cfs	$Q_{10postdevelopment}$	43.9	cfs
$RV_{1postdevelopment}$	1.97	in	$RV_{10postdevelopment}$	4.39	in
$Q_{1postdevelopment}$ (adjusted)	17.3	cfs	$Q_{10postdevelopment}$ (adjsuted)	41.6	cfs
$RV_{1postdevelopment}$ (adjusted)	1.74	in	$RV_{10postdevelopment}$ (adjusted)	4.16	in
$Q_{1allowable}$	6.7	cfs	$Q_{10allowable}$	21.7	cfs

Improvement Factor, site > 1 ac: 0.8

$Q_{developed} \leq I.F.*(Q_{predeveloped}*RV_{predeveloped})/RV_{developed}$

Minimum Peak Discharge

Since Allowable > forested, then Allowable applies:

1-yr, forest	5.7	cfs	1-yr	6.7	cfs allowed
10-yr, forest	19.2	cfs	10-yr	21.7	cfs allowed

$(Q_{forest}*RV_{forest})/RV_{developed}$

Storage Requirements, est.	RV		q_p/q_i	V_s/V_r	V_s	V_s
					(in)	(cu ft)
1-yr	1.74	in	0.386	0.33	0.574	13340
10-yr	4.16	in	0.522	0.271	1.127	26191

ALEXANDRIA WATER QUALITY VOLUME

Proposed impervious (within LOD):	4.52	AC
Water Quality Volume Default (WQV) required (1/2" of proposed impervious runoff):	8212	CF

Water Treatment On-Site	Area treated by BMP	Impervious Area treated by BMP	BMP Efficiency
BMP Type	(ac)	(ac)	N/A
Dry Swale	0.95	0.15	N/A
Infiltration	1.24	0.84	N/A
Filter	2.64	2.14	50%
Permeable Pavement	1.30	1.30	N/A
TOTAL	6.13	4.43	

WQV Treated (1" of impervious area runoff): 16081 CF

AM-3

COMMONWEALTH OF VIRGINIA
JOSEPH E. HUESMANN
NO. 03071
PROFESSIONAL ENGINEER

NOTE: DUE TO LIMITATIONS OF VRRM SPREADSHEET REGARDING TREATING UNDISTURBED EXISTING IMPERVIOUS AREA, IMPERVIOUS, DISTURBED AND SITE AREAS MAY NOT MATCH THOSE SHOWN ON COVER.

APPROVED
SPECIAL USE PERMIT NO. _____
DEPARTMENT OF PLANNING & ZONING
DIRECTOR DATE
DEPARTMENT OF TRANSPORTATION & ENVIRONMENTAL SERVICES
SITE PLAN NO. _____
DIRECTOR DATE
CHAIRMAN, PLANNING COMMISSION DATE
DATE RECORDED _____
INSTRUMENT NO. DEED BOOK NO. PAGE NO.

DESIGNED DATE
DRAWN MR DATE
CHECKED MP DATE
APPROVED ... DATE

REFERENCE DRAWINGS

NUMBER	DESCRIPTION

REVISIONS

DATE	BY	DESCRIPTION
02/26/16	MR	REVISED PER CITY COMMENTS
03/31/16	MR	REV. PER CITY COMMENTS - PRELIM. SITE PLAN
05/20/16	JH	REV. PER CITY COMMENTS
03/08/17	JH	AMENDMENT 3 REVISIONS

WASHINGTON METROPOLITAN AREA TRANSIT AUTHORITY
DEPARTMENT OF TRANSIT INFRASTRUCTURE AND ENGINEERING SERVICES
OFFICE OF MAJOR CAPITAL PROJECTS

SUBMITTED DATE
APPROVED CHIEF ENGINEER DATE

POTOMAC YARD METRORAIL STATION
GENERAL PLANS
DEVELOPMENT PRELIMINARY SITE PLAN
BMP CALCULATIONS

SCALE N/A | DRAWING NO. C-08 | SHEET NO. 19 OF 27

Mar. 07,2017 - 3:33pm
I:\WMATA On-Call Planning Services\Potomac Yd Station EIS\100 Technical\400 General Plans\DSUP Concept\DSUP Rev 1\DWG.dwg